SHOALHAVEN CITY COUNCIL

LANDSLIDE REMEDIATION DESIGN OF VARIOUS SITES

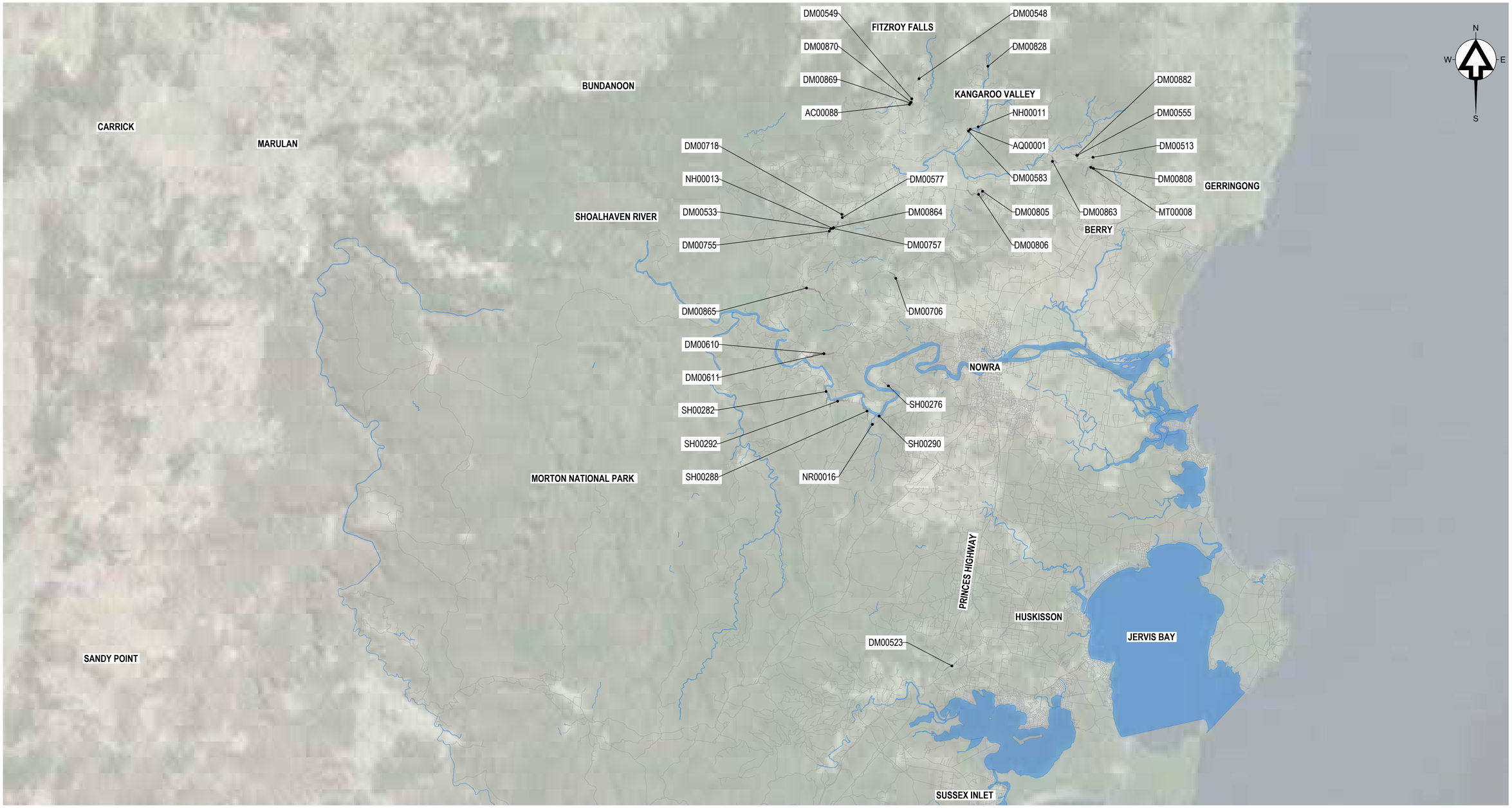

LOCALITY PLAN
1:150,000

PLOT DATE 22-Feb-2023 4:11:19 PM				
REVISIONS				
	1	24.02.2023	ISSUED FOR CONSTRUCTION	DT
		DATE	DESCRIPTION	

THIS DRAWING IS THE PROPERTY OF SLR CONSULTING AUSTRALIA AND MUST NOT BE RETAINED, COPIED OR USED WITHOUT THE CONSENT OF THE COMPANY.

THIS DRAWING IS NOT TO BE USED FOR CONSTRUCTION UNLESS ENDORSED BELOW

Responsible Principal Signature | Date

DRAWN: WP/GL	DATE: 20.10.2022
DESIGN: MB/DT	DATE: 19.10.2022
DRG. CHECK: MB	DATE: 24.10.2022
DES. CHECK: DT	DATE: 25.10.2022

SLR
LEVEL 1, THE CENTRAL BUILDING
INNOVATION CAMPUS, SQUIRES WAY
NORTH WOLLONGONG NSW 2500
AUSTRALIA
T: +61 2 4249 1004
F: +61 2 4249 1000
www.slrconsulting.com

Shoalhaven City Council

FOR CONSTRUCTION

A1

DO NOT SCALE THIS DRAWING
IF IN DOUBT ASK

CLIENT: SHOALHAVEN CITY COUNCIL

PROJECT: LANDSLIDE REMEDIATION DESIGN OF VARIOUS SITES

DRAWING TITLE: COVER SHEET & SITES LOCALITY PLAN

SCALE:	DRAWING NUMBER:	ISSUE:
1:150km	660.30255-G-1000	1

CONSULTANT PROJECT 660.30255

FULL SIZE ON ORIGINAL 0 10 20 40 60 80 100 A1

H:\Projects-SLR\660-SrvWOL\660-WOL\660.30255.00000 Detailed Geotechnical Analysis and Desig\06 SLR Data\01 CADGIS\CAD\660.30255-G-1000.dwg

DRAWING SCHEDULE (1 OF 2)

DRAWING NUMBER	DRAWING TITLE
660.30255-G-1000	COVER SHEET & SITES LOCALITY PLAN
660.30255-G-1001	DRAWING SCHEDULE & COORDINATES TABLE
660.30255-G-1002	GENERAL NOTES SHEET 1
660.30255-G-1003	GENERAL NOTES SHEET 2
660.30255-G-1004	GENERAL NOTES SHEET 3
660.30255-G-1010	SITE DM00865 - GENERAL ARRANGEMENT LAYOUT PLAN
660.30255-G-1020	SITE SH00290 - GENERAL ARRANGEMENT LAYOUT PLAN
660.30255-G-1030	SITE DM00706 - GENERAL ARRANGEMENT LAYOUT PLAN
660.30255-G-1031	SITE DM00706 - CROSS SECTIONS SHEET
660.30255-G-1040	SITE AC00088 - GENERAL ARRANGEMENT LAYOUT PLAN
660.30255-G-1050	SITE DM00548 - GENERAL ARRANGEMENT LAYOUT PLAN
660.30255-G-1051	SITE DM00548 - DETAILS SHEET
660.30255-G-1060	SITE DM00549 - GENERAL ARRANGEMENT LAYOUT PLAN
660.30255-G-1070	SITE DM00869 - GENERAL ARRANGEMENT LAYOUT PLAN
660.30255-G-1071	SITE DM00869 - CROSS SECTIONS SHEET
660.30255-G-1080	SITE DM00870 - GENERAL ARRANGEMENT LAYOUT PLAN
660.30255-G-1090	SITE SH00282 - GENERAL ARRANGEMENT LAYOUT PLAN
660.30255-G-1100	SITE SH00288 - GENERAL ARRANGEMENT LAYOUT PLAN
660.30255-G-1110	SITE SH00292 - GENERAL ARRANGEMENT LAYOUT PLAN
660.30255-G-1120	SITES DM00882 & DM00555 - GENERAL ARRANGEMENT LAYOUT PLAN
660.30255-G-1121	SITE DM0555 - CROSS SECTIONS SHEET
660.30255-G-1122	SITE DM00555 - DETAILS SHEET
660.30255-G-1123	SITE DM00882 - CROSS SECTIONS SHEET
660.30255-G-1130	SITES DM00610 & DM00611 - GENERAL ARRANGEMENT LAYOUT PLAN
660.30255-G-1140	SITE DM00805 - GENERAL ARRANGEMENT LAYOUT PLAN
660.30255-G-1150	SITE DM00806 - GENERAL ARRANGEMENT LAYOUT PLAN
660.30255-G-1151	SITE DM00806 - DETAILS SHEET
660.30255-G-1160	SITE DM00533 - GENERAL ARRANGEMENT LAYOUT PLAN
660.30255-G-1170	SITES DM00577 & DM00718 - GENERAL ARRANGEMENT LAYOUT PLAN
660.30255-G-1180	SITE DM00755 - GENERAL ARRANGEMENT LAYOUT PLAN
660.30255-G-1190	SITES DM00757, NH00013 & DM00864 - GENERAL ARRANGEMENT LAYOUT PLAN

DRAWING SCHEDULE (2 OF 2)

DRAWING NUMBER	DRAWING TITLE
660.30255-G-1200	SITE DM00583 - GENERAL ARRANGEMENT LAYOUT PLAN
660.30255-G-1201	SITE DM00583 - CROSS SECTIONS SHEET
660.30255-G-1210	SITE DM00828 - GENERAL ARRANGEMENT LAYOUT PLAN
660.30255-G-1220	SITE NH00011 - GENERAL ARRANGEMENT LAYOUT PLAN
660.30255-G-1230	SITE DM00513 - GENERAL ARRANGEMENT LAYOUT PLAN
660.30255-G-1231	SITE DM00513 - CROSS SECTIONS SHEET
660.30255-G-1232	SITE DM00513 - DETAILS SHEET 1
660.30255-G-1233	SITE DM00513 - DETAILS SHEET 2
660.30255-G-1240	SITE DM00863 - GENERAL ARRANGEMENT LAYOUT PLAN
660.30255-G-1250	SITE SH00276 - GENERAL ARRANGEMENT LAYOUT PLAN
660.30255-G-1260	SITE DM00808 - GENERAL ARRANGEMENT LAYOUT PLAN
660.30255-G-1261	SITE DM00808 - CROSS SECTIONS SHEET
660.30255-G-1262	SITE DM00808 - TREATMENT ELEVATION SHEET
660.30255-G-1270	SITE MT00008 - GENERAL ARRANGEMENT LAYOUT PLAN
660.30255-G-1271	SITE MT00008 - CROSS SECTIONS SHEET
660.30255-G-1272	SITE MT00008 - ELEVATION & DETAILS SHEET
660.30255-G-1280	SITENR00016 - GENERAL ARRANGEMENT LAYOUT PLAN
660.30255-G-1281	SITE NR00016 - CROSS SECTIONS SHEET
660.30255-G-1290	SITE AQ00001 - GENERAL ARRANGEMENT LAYOUT PLAN
660.30255-G-1300	SITE DM00523 - GENERAL ARRANGEMENT LAYOUT PLAN
660.30255-G-1310	SITE DM00822 - GENERAL ARRANGEMENT LAYOUT PLAN
660.30255-G-1320	SITE DM00890 - GENERAL ARRANGEMENT LAYOUT PLAN
660.30255-G-1330	SITE DM00899 - GENERAL ARRANGEMENT LAYOUT PLAN
660.30255-G-2000	TYPICAL DETAILS & SPECIFICATIONS SHEET 1
660.30255-G-2001	TYPICAL DETAILS & SPECIFICATIONS SHEET 2
660.30255-G-2002	TYPICAL DETAILS & SPECIFICATIONS SHEET 3
660.30255-G-2003	TYPICAL DETAILS & SPECIFICATIONS SHEET 4
660.30255-G-2010	TYPICAL DETAILS & SPECIFICATIONS SHEET 5
660.30255-G-2011	TYPICAL DETAILS & SPECIFICATIONS SHEET 6
660.30255-G-2012	TYPICAL DETAILS & SPECIFICATIONS SHEET 7
660.30255-G-2013	TYPICAL DETAILS & SPECIFICATIONS SHEET 8
660.30255-G-2014	TYPICAL DETAILS & SPECIFICATIONS SHEET 9

COORDINATES TABLE

SITE NUMBER	SITE LOCATION	EASTING	NORTHING
DM00865	Abernathys Rd	266450	6145038
SH00290	Bamarang Rd	271979	6135292
DM00706	Browns Mountain Rd	273244	6145779
AC00088	Bunkers Hill Rd	274285	6159006
DM00548	Bunkers Hill Rd	275018	6160966
DM00549	Bunkers Hill Rd	274459	6159432
DM00869	Bunkers Hill Rd	274354	6159116
DM00870	Bunkers Hill Rd	274402	6159173
SH00282	Burrier Rd	267939	6137163
SH00288	Burrier Rd	271051	6135673
SH00292	Burrier Rd	268817	6136420
DM00555	Foremans Rd	287060	6155133
DM00882	Foremans Rd	287028	6155134
DM00610	Hughes Rd	267764	6140045
DM00611	Hughes Rd	267775	6140040
DM00805	Kangaroo Valley Rd	279846	6152399
DM00806	Kangaroo Valley Rd	279546	6152162
DM00533	Mount Scanzi Rd	268294	6149554
DM00577	Mount Scanzi Rd	269153	6150610
DM00718	Mount Scanzi Rd	269141	6150636
DM00755	Mount Scanzi Rd	268187	6149366
DM00757	Mount Scanzi Rd	268466	6149581
DM00864	Mount Scanzi Rd	268507	6149629
NH00013	Mount Scanzi Rd	268449	6149585
DM00583	Upper Kangarooo River Rd	278778	6156987
DM00828	Upper Kangarooo River Rd	280258	6161915
NH00011	Upper Kangarooo River Rd	279513	6157304
DM00513	Wattamolla Rd	288246	6154987
DM00863	Wattamolla Rd	285173	6154673
SH00276	Wogamia Rd	272677	6137591
DM00808	Woodhill Mountain Rd	288281	6154144
MT00008	Woodhill Mountain Rd	288085	6154219
NR00016	Yalwal Rd	271466	6134664
AQ00001	Upper Kangarooo River Rd	278908	6157117
DM00523	Suffolk Road	277515	6116275
DM00822	Mount Scanzi Rd	269174	6150402
DM00890	Burrier Rd	269100	6136495
DM00899	Bamarang Rd	272066	6135240

CONSULTANT PROJECT 660.30255

FULL SIZE ON ORIGINAL 0 10 20 40 60 80 100 A1

PLOT DATE 22-Feb-2023 4:11:29 PM

REVISIONS

	DATE	DESCRIPTION	
1	24.02.2023	ISSUED FOR CONSTRUCTION	DT

THIS DRAWING IS THE PROPERTY OF SLR CONSULTING AUSTRALIA AND MUST NOT BE RETAINED, COPIED OR USED WITHOUT THE CONSENT OF THE COMPANY.

THIS DRAWING IS NOT TO BE USED FOR CONSTRUCTION UNLESS ENDORSED BELOW

Responsible Principal Signature | Date

DRAWN: WP/GL	DATE: 19.10.2022
DESIGN: MB/DT	DATE: 20.10.2022
DRG. CHECK: MB	DATE: 24.10.2022
DES. CHECK: DT	DATE: 25.10.2022

SLR
LEVEL 1, THE CENTRAL BUILDING
INNOVATION CAMPUS, SQUIRES WAY
NORTH WOLLONGONG NSW 2500
AUSTRALIA
T: +61 2 4249 1004
F: +61 2 4249 1000
www.slrconsulting.com

Shoalhaven City Council

FOR CONSTRUCTION

CLIENT: SHOALHAVEN CITY COUNCIL

PROJECT: LANDSLIDE REMEDIATION DESIGN OF VARIOUS SITES

DRAWING TITLE: DRAWING SCHEDULE & COORDINATES TABLE

A1 | DO NOT SCALE THIS DRAWING IF IN DOUBT ASK | SCALE: N/A | DRAWING NUMBER: 660.30255-G-1001 | ISSUE: 1

H:\Projects-SLR\660-SrvWOL\660-WOL\660.30255.00000 Detailed Geotechnical Analysis and Desig\06 SLR Data\01 CADGIS\CAD\660.30255-G-1000.dwg

DEFINITIONS

1. PRINCIPAL - THE PRINCIPAL IS IDENTIFIED AS SHOALHAVEN CITY COUNCIL.
2. GEOTECHNICAL DESIGN REPRESENTATIVE - SUITABLY QUALIFIED GEOTECHNICAL ENGINEER APPOINTED BY THE PRINCIPAL TO PROVIDE ON-SITE VERIFICATION OF THE CONSTRUCTION.
3. CONTRACTOR - THE ENTITY UNDERTAKING THE CONSTRUCTION.
4. UNO - UNLESS NOTED OTHERWISE.

GENERAL NOTES

5. THE GEOLOGICAL PROFILE AND GEOTECHNICAL CONDITIONS SHOWN ON THE DRAWINGS ARE INDICATIVE AND HAVE BEEN INFERRED FROM LIMITED INVESTIGATIONS. SHOULD THE ENCOUNTERED GEOLOGICAL PROFILE DIFFER FROM THAT SHOWN, THE DESIGN SHALL BE REVIEWED TO ENSURE SUITABILITY OF THE DESIGN TO ENCOUNTERED CONDITIONS.
6. PRIOR TO CONSTRUCTION SITE SET-UP, THE CONTRACTOR SHALL SUBMIT THE FOLLOWING TO THE PRINCIPAL FOR REVIEW.
   A. ALL SAFE WORK METHOD STATEMENTS AND PLANS
   B. CONSTRUCTION STAGING PLANS
   C. CONSTRUCTION PROGRAM
   D. CONSTRUCTION ENVIRONMENTAL MANAGEMENT PLAN (CEMP)
   E. PROJECT QUALITY PLAN
   APPROVAL OF THE DOCUMENTATION BY THE PRINCIPAL SHALL CONSTITUTE A HOLD POINT.
7. SITE TO BE RETURNED TO ORIGINAL CONDITION OR BETTER AT THE COMPLETION OF THE WORKS
8. NOMINATION OF PROPRIETARY ITEMS DOES NOT INDICATE EXCLUSIVE PREFERENCE BUT INDICATES THE REQUIRED PROPERTIES OF THE ITEM. SIMILAR ALTERNATIVES HAVING THE REQUIRED PROPERTIES MAY BE OFFERED FOR APPROVAL BY THE DESIGN REPRESENTATIVE.
9. DIMENSIONS ARE IN MILLIMETRES, LEVELS ARE IN METRES UNO, CHAINAGES ARE IN METRES UNO. REDUCED LEVELS RELATE TO AUSTRALIAN HEIGHT DATUM.
10. ALL DIMENSIONS AND SETTING OUT SHALL BE VERIFIED ON SITE BY THE CONTRACTOR BEFORE COMMENCING WORK. HAVE SURVEY AND SETTING OUT UNDERTAKEN BY A REGISTERED SURVEYOR. ALL DIMENSIONS DO NOT OBTAIN DIMENSIONS BY SCALING OF THE DRAWINGS.
11. VERIFY ON SITE SETTING OUT DIMENSIONS AND EXISTING MEMBER SIZES SHOWN ON DRAWINGS BEFORE SHOP DRAWINGS, CONSTRUCTION AND FABRICATION IS COMMENCED.
12. REFER DISCREPANCIES TO THE PRINCIPAL BEFORE PROCEEDING WITH WORK.
13. WORKMANSHIP AND MATERIALS TO COMPLY WITH REQUIREMENTS OF AUSTRALIAN STANDARDS, NATIONAL CONSTRUCTION CODE (NCC) AND BY-LAWS AND ORDINANCES OF RELEVANT BUILDING AUTHORITIES. ALL STANDARDS REFERRED TO ARE THOSE CURRENT (AS AMENDED) AT COMMENCEMENT OF CONTRACT.
14. WHERE NEW WORK ABUTS EXISTING, PROVIDE SMOOTH TRANSITION FREE OF ABRUPT CHANGES.
15. PROTECT EXISTING STRUCTURES FROM DAMAGE OR CRACKING. MAKE GOOD ANY DAMAGE TO EXISTING ELEMENTS AT COMPLETION OF WORKS.
16. IMPLEMENT SOIL AND WATER MANAGEMENT PROCEDURES TO AVOID EROSION, CONTAMINATION AND SEDIMENTATION OF SITE, SURROUNDING AREAS AND DRAINAGE SYSTEMS.
17. DISPOSE OF SURPLUS MATERIAL OFF SITE IN ACCORDANCE WITH LOCAL AUTHORITY WASTE REGULATIONS.
18. TEMPORARY WORKS AND CONSTRUCTION METHODS ARE THE RESPONSIBILITY OF THE CONTRACTOR.
19. GIVE TWO WORKING DAYS (48 HOURS) NOTICE SO THAT INSPECTION OF CRITICAL STAGES OF WORK (INCLUDING HOLD POINTS AND WITNESS POINTS) MAY BE MADE.
20. INSPECTIONS AND REVIEWS UNDERTAKEN BY THE PRINCIPAL OR OTHERS DO NOT RELIEVE THE CONTRACTOR OF RESPONSIBILITY FOR COMPLIANCE WITH THE DRAWINGS OR SPECIFICATIONS.
21. AT THE COMPLETION OF THE WORKS, THE CONTRACTOR SHALL PREPARE AND SUBMIT A 'HANDOVER' PACKAGE TO THE PRINCIPAL FOR APPROVAL. THE PACKAGE SHALL INCLUDE AT A MINIMUM:
   A. DRILLING RECORDS
   B. RFCS, NCR'S, CERTIFICATES AND OTHER FORMS AS NOMINATED BY THE PRINCIPAL.
   C. APPROVAL OF THE HANDOVER PACKAGE BY THE PRINCIPAL SHALL CONSTITUTE A HOLD POINT.

SAFETY IN DESIGN

22. THE SAFETY RISK MITIGATION ITEMS BELOW ARE BASED ON SLR'S DESIGN EXPERIENCE AND DO NOT NECESSARILY ACCOUNT FOR ALL CONSTRUCTION, OPERATION, MAINTENANCE AND DEMOLITION SAFETY RISKS. BASED ON INFORMATION AVAILABLE WHEN THIS DRAWING WAS MADE, IN ITS CAPACITY AS DESIGNER ONLY, SLR HAS TRIED TO IDENTIFY SAFETY RISKS PERTAINING TO CONSTRUCTION, OPERATION, MAINTENANCE AND DEMOLITION PHASES OF THE ASSET. INCLUSION (OR NOT) OF ANY ITEM DOES NOT REDUCE OR LIMIT OBLIGATIONS OF CONSTRUCTOR, USER, MAINTAINER AND DEMOLISHER TO UNDERTAKE APPROPRIATE RISK MANAGEMENT ACTIVITIES TO REDUCE RISK AND IS NOT AN ADMISSION BY SLR THAT INCLUSION OF ANY ITEM IS DESIGNER'S RESPONSIBILITY.
23. CARRY OUT WORK IN A SAFE MANNER IN ACCORDANCE WITH APPLICABLE LEGISLATION, STATUTORY REGULATIONS, BY-LAWS OR RULES. CONTRACTOR IS RESPONSIBLE FOR OCCUPATIONAL HEALTH AND SAFETY OF SITE PERSONNEL AND GENERAL PUBLIC IN ACCORDANCE WITH ALL CURRENT WORK HEALTH AND SAFETY ACTS, LEGISLATIVE REQUIREMENTS, ASSOCIATED REGULATIONS AND CODES OF PRACTICE, INDUSTRIAL AGREEMENTS AND ACCEPTED INDUSTRY PRACTICE.
24. OBTAIN NECESSARY PERMITS AND APPROVALS TO WORK ON SITE. NOTIFY RELEVANT SERVICE AUTHORITIES BEFORE COMMENCING WORK ON SITE.
25. SERVICES ARE TO BE LOCATED ON SITE PRIOR TO CONSTRUCTION COMMENCING.
26. DURING CONSTRUCTION STRUCTURES SHALL BE MAINTAINED IN A STABLE CONDITION AND NO PART SHALL BE OVERLOADED. TEMPORARY SUPPORTS SHALL BE PROVIDED BY THE BUILDER IN ORDER TO KEEP THE WORKS AND ANY EXCAVATIONS STABLE AT ALL TIMES.
27. PROVIDE SAFETY BARRIERS AT EDGES OF OPENINGS AND ELEVATED AREAS. ENSURE WORKERS ARE APPROPRIATELY RESTRAINED/ TETHERED/ HARNESSED DURING WORKS WHERE THE LIKELIHOOD AND CONSEQUENCE OF A FALL IS REASONABLY SIGNIFICANT.
28. REVIEW ADEQUACY OF WORKING SPACE AVAILABLE FOR CONSTRUCTION ACTIVITIES. ENSURE SEPARATION OF PLANT AND PERSONNEL ON SITE, INCLUDING MOVEMENTS OF BOTH.
29. LOCATE LIFTING SLEW AND LAY DOWN AREAS AWAY FROM REGULAR CONSTRUCTION TRAFFIC.
30. WRITTEN RISK ASSESSMENTS ARE ADVISED FOR ACCESS TO OPEN EXCAVATIONS.
31. PROVIDE ACCESS AND EGRESS TO EXCAVATIONS APPROPRIATE IN CASE OF INUNDATION, COLLAPSE OR ENGULFMENT.
32. SEEK ADVICE FROM SUITABLY QUALIFIED GEOTECHNICAL OR STRUCTURAL ENGINEER PRIOR TO OPERATION OF HEAVY SURFACE PLANT AND EQUIPMENT OR STOCKPILING MATERIAL NEAR OPEN EXCAVATIONS OR EXISTING RETAINING STRUCTURES.
33. SEEK ADVICE FROM SUITABLY QUALIFIED GEOTECHNICAL FOR ALL TEMPORARY BATTERS.
34. SEEK ADVICE FROM SUITABLY QUALIFIED STRUCTURAL ENGINEER BEFORE CORING, CHASING, CUTTING OR REMOVAL OF EXISTING CONCRETE AND REINFORCEMENT.
35. MAKE WORK AREAS SAFE WHERE STRUCTURAL ELEMENTS ARE DAMAGED, CRACKED OR HAVE SUFFERED SIGNIFICANT SECTION LOSS BEFORE ALLOWING GENERAL CONSTRUCTION OR REPAIR ACCESS.
36. REPORT SIGNIFICANT SECTION LOSS OR CORROSION FLAKING BEFORE STARTING PAINTING OR REPAIRS. CONSULT SUITABLY QUALIFIED STRUCTURAL ENGINEER IF SECTION LOSS OR EXTENSIVE CORROSION FLAKING PRESENT BEFORE PROCEEDING WITH WORK.
37. UNTIL PERMANENT SUPPORT IS PROVIDED, PROVIDE TEMPORARY SUPPORT FOR SECTIONS OF EXISTING STRUCTURES WHICH ARE TO BE ALTERED AND WHICH NORMALLY RELY FOR SUPPORT ON WORK TO BE DEMOLISHED.
38. PROVIDE SUPPORT TO ADJACENT STRUCTURES WHERE NECESSARY, SUFFICIENT TO PREVENT DAMAGE RESULTING FROM THE WORKS.
39. LATERAL SUPPORTS: PROVIDE LATERAL SUPPORT AT LEAST EQUAL TO THAT GIVEN BY THE STRUCTURE TO BE DEMOLISHED, USING SHORING.
40. VERTICAL SUPPORTS: PROVIDE SUPPORT WHERE NECESSARY USING PILING OR UNDERPINNING, OR BOTH.

ENVIRONMENTAL SITE MANAGEMENT

41. IT IS THE RESPONSIBILITY OF THE CONTRACTOR TO ENSURE THAT ALL MEASURES ARE TAKEN DURING THE COURSE OF CONSTRUCTION TO PREVENT SEDIMENT EROSION AND POLLUTION OF THE DOWNSTREAM SYSTEM.
42. TEMPORARY EROSION AND SEDIMENT CONTROL (ESC) MEASURES SHALL BE PROVIDED IN ACCORDANCE WITH INTERNATIONAL EROSION CONTROL ASSOCIATION (IECA) BEST PRACTICE EROSION AND SEDIMENT CONTROL GUIDELINES (2008) AND BE MAINTAINED IN OPERATIVE CONDITION AT ALL TIMES AND SHALL REMAIN IN PLACE FOR THE DURATION OF THE WORK.
43. SEDIMENT AND EROSION CONTROLS MUST BE IN PLACE PRIOR TO THE COMMENCEMENT OF ANY EARTHWORKS OR DEMOLITION ACTIVITY. THE LOCATION OF SUCH DEVICES IS GENERALLY AT THE END OF THE DIRECTION OF FLOW BEFORE REACHING THE DOWNSTEAM SYSTEM. FINAL POSITION SHALL BE DETERMINED ON SITE.
44. INSTALL TEMPORARY SEDIMENT BARRIERS TO ALL INLET PITS LIKELY TO COLLECT SILT LADEN WATER UNTIL SURROUNDING AREAS ARE PAVED OR REVEGETATED.
45. ALL SILT FENCES AND BARRIERS ARE TO BE MAINTAINED IN GOOD ORDER AND REGULARLY DESILTED DURING THE CONSTRUCTION PERIOD.
46. STOCKPILES OF LOOSE MATERIALS SUCH AS SAND, SOIL AND GRAVEL MUST BE COVERED WITH GEOTEXTILE. PLASTIC SHEETING OR MEMBRANE MUST NOT BE USED. SAFETY BARRICADING SHALL BE USED TO ISOLATE STOCKPILES OF SOLID MATERIALS SUCH AS STEEL REINFORCING. SEDIMENT FENCE IS TO BE PLACED DOWNSLOPE OF ALL STOCKPILES.
47. ANY WASTE GENERATED, INCLUDING EXCAVATED MATERIALS, SHALL BE REMOVED FROM THE SITE AND DISPOSED OF APPROPRIATELY, ACCORDING TO THE WASTE CLASSIFICATION. GENERAL WASTE (RUBBISH) IS NOT TO BE ALLOWED TO LIE OR ACCUMULATE ON THE SITE. KEEP ALL DOCKETS/RECEIPTS FOR WASTE MANAGEMENT/DISPOSAL AND FORWARD COPIES TO THE PRINCIPAL'S REPRESENTATIVE.
48. ALL VEHICLES LEAVING THE SITE MUST HAVE CLAY AND SOIL SHAKEN OFF AS PRACTICALLY AS POSSIBLE.
49. TRUCKS REMOVING EXCAVATED/DEMOLISHED MATERIAL SHALL TRAVEL ON STABILISED CONSTRUCTION PATHS. MATERIAL ARE TO BE TAKEN TO THE TRUCKS TO REDUCE TRUCK MOVEMENTS ON SITE. TRUCKS TO BE LIMITED TO SINGLE UNIT HEAVY RIGID VEHICLES (NO SEMI TRAILERS).
50. DURING TRENCH EXCAVATION ALL SPOIL SHALL BE MOUNDED ON THE UPHILL SIDE OF TRENCHES AND PLACEMENT IS TO COMPLY WITH THE PRINCIPAL'S REQUIREMENT.

WASTE AND CONTAMINATION

51. A WASTE CLASSIFICATION HAS NOT BEEN CARRIED OUT FOR THIS SITE. HOWEVER, IF POTENTIAL CONTAMINANTS ARE DISCOVERED DURING WORKS A WASTE CLASSIFICATION MUST BE CARRIED OUT BY THE CONTRACTOR, IN ACCORDANCE WITH REGULATORY REQUIREMENTS.
52. IF REQUIRED, ANY WASTE GENERATED, INCLUDING EXCAVATED MATERIALS, SHALL BE REMOVED FROM SITE AND DISPOSED OF APPROPRIATELY, ACCORDING TO THE WASTE CLASSIFICATION.
53. GENERAL WASTE (RUBBISH) IS NOT TO BE ALLOWED TO LIE OR ACCUMULATE ON THE SITE. KEEP ALL DOCKETS/RECEIPTS FOR WATE MANAGEMENT/DISPOSAL AND FORWARD COPIES TO THE PRINCIPAL'S REPRESENTATIVE.
54. ONLY VIRGIN EXCAVATED NATURAL MATERIAL (VENM) CAN BE IMPORTED ON SITE UNLESS APPROPRIATE TESTING AND DOCUMENTATION IS PROVIDED.
55. KEEP ALL DOCUMENTS/RECORDS OF THE TRANSPORT AND USE OF ATERIAL IMPORTED ONTO SITE AND FORWARD COPIES TO THE PRINCIPAL'S REPRESENTATIVE.

TRAFFIC CONTROL

56. ESTABLISH TRAFFIC CONTROL (IF REQUIRED) AT PROJECT BOUNDARIES IN ACCORDANCE WITH AN APPROPRIATE TRAFFIC CONTROL PLAN APPROVED BY THE PRINCIPAL.
57. CONSTRUCTION WARNING SIGNS AND TRAFFIC SPEED SIGNS TO BE ESTABLISHED IN GENERAL ACCORDANCE WITH TRAFFIC CONTROL PLAN APPROVED BY THE PRINCIPAL.
58. A WASTE CLASSIFICATION HAS NOT BEEN CARRIED OUT FOR THIS SITE. HOWEVER, IF POTENTIAL CONTAMINANTS ARE DISCOVERED DURING WORKS A WASTE CLASSIFICATION MUST BE CARRIED OUT BY THE CONTRACTOR, IN ACCORDANCE WITH REGULATORY REQUIREMENTS.

EARTHWORKS

59. STRIP OFF ALL VEGETATION, RUBBISH AND TOPSOIL CONTAINING ORGANIC OR ROOT MATTER FROM THE AREA OF THE WORKS AND REMOVE FROM SITE/ STOCKPILE FOR RE-USE.
60. WHERE REQUIRED, EXCAVATE SITE TO THE EXTENT DETAILED IN THE DETAILED SECTION DRAWING.
61. FOR EACH SITE, THE FOUNDATION LEVEL WILL VARY DEPENDING ON GROUND CONDITIONS ENCOUNTERED ON THE SITE AND SHALL BE CONFIRMED ON SITE BY A SUITABLY QUALIFIED GEOTECHNICAL ENGINEER.
62. PRIOR TO ANY FILLING, THE EXPOSED SUBGRADE SHALL BE PROOF ROLLED WITH A 12 TONNE STATIC MASS SMOOTH DRUM ROLLER IN THE PRESENCE OF THE PRINCIPAL'S REPRESENTATIVE OR GEOTECHNICAL ENGINEER AND ANY SOFT OR YIELDING MATERIALS REMOVED AND REPLACED WITH APPROVED FILLING COMPACTED AS HEREAFTER SPECIFIED.
63. IMPORTING FILL MATERIAL TO SITE: SEE NOTE NO. 54.
64. FILL SHALL BE SOUND WELL GRADED MATERIAL WITH A HIGH GRANULAR CONTENT AND SHALL BE THE BEST OF EXCAVATED MATERIALS FROM THE SITE, OR APPROVED SOUND IMPORTED MATERIAL FREE OF RUBBISH, PLASTIC CLAY OR LARGE PIECES THAT WOULD PRECLUDE COMPACTION.
65. FILL SHALL BE SPREAD IN LAYERS NOT EXCEEDING 150mm AND COMPACTED AT OPTIMUM MOISTURE CONTENT ±2% TO NOT LESS THAN THE REQUIRED MAXIMUM DRY DENSITY.
66. DENSITY TESTING OF FILLING (AND BASE COURSE WHERE APPLICABLE) SHALL BE CARRIED OUT AT THE RATE OF 1 TEST PER 200 SQUARE METRES EACH LAYER (MINIMUM 2 TESTS).
67. WHERE REQUIRED, THE FOUNDATION LAYER SHALL BE, DRY, SMOOTH, LEVEL AND GRADED TO THE PROFILE AS SHOWN IN THE DETAILED DRAWING. IT SHALL BE FREE OF SURFACE IRREGULARITIES, LOOSE OR UNSTUITABLE MATERIAL.
68. WHERE REQUIRED, A BLINDNG LAYER TO INFILL VOIDS, UNEVEN GROUND AND CAVITIES AT FOUNDATION LEVEL TO BE CREATED WITH SITE WON GRANULAR SOILS AND ROCKFILL TO CREATE A SMOOTH, EVEN, STABLE WORKING PLATFORM. GRANULAR BLINDING MATERIAL SHALL COMPRISE OF GRANULAR, SITE WON SOIL FREE OF UNSTUITABLE MATERIAL AND SHALL BE COMPACTED USING MANUAL TECHNIQUES (E.G., HAND TAMPING, WALK-BEHIND COMPACTOR) TO MINIMUM RELATIVE DENSITY OF 70%.
69. THE CONTRACTOR SHALL PROGRAM AND UNDERTAKE THE EARTHWORKS OPERATIONS SUCH THAT WORKING AREAS ARE ADEQUATELY DRAINED DURING CONSTRUCTION. THE SURFACE SHALL BE GRADED AND SEALED OFF TO REMOVE DEPRESSIONS WHICH WOULD ALLOW WATER TO POND AND PENETRATE THE UNDERLYING MATERIAL. ANY DAMAGE RESULTING FROM FAILURE TO COMPLY WITH THESE REQUIREMENTS SHALL BE RECTIFIED AT THE CONTRACTOR'S EXPENSE.
70. HAVE TESTING PERFORMED BY AN INDEPENDENT NATA (NATIONAL ASSOCIATION OF TESTING AUTHORITIES) ACCREDITED AUTHORITY AND PROVIDE TEST REPORTS TO THE PRINCIPAL. THE CONTRACTOR SHALL BEAR ALL COSTS ASSOCIATED WITH COMPLIANCE TESTING.

CONSULTANT PROJECT 660.30255 FULL SIZE ON ORIGINAL A1

PLOT DATE 22-Feb-2023 4:11:38 PM

REVISIONS

	DATE	DESCRIPTION	
1	24.02.2023	ISSUED FOR CONSTRUCTION	DT

Responsible Principal Signature | Date

DRAWN:	WP/GL	DATE:	20.10.2022
DESIGN:	MB/DT	DATE:	19.10.2022
DRG. CHECK:	MB	DATE:	24.10.2022
DES. CHECK:	DT	DATE:	25.10.2022

SLR
LEVEL 1, THE CENTRAL BUILDING
INNOVATION CAMPUS, SQUIRES WAY
NORTH WOLLONGONG NSW 2500
AUSTRALIA
T: +61 2 4249 1004
F: +61 2 4249 1000
www.slrconsulting.com

Shoalhaven City Council

FOR CONSTRUCTION

CLIENT: SHOALHAVEN CITY COUNCIL

PROJECT: LANDSLIDE REMEDIATION DESIGN OF VARIOUS SITES

DRAWING TITLE: GENERAL NOTES SHEET 1

A1	DO NOT SCALE THIS DRAWING IF IN DOUBT ASK	SCALE: N/A	DRAWING NUMBER: 660.30255-G-1002	ISSUE: 1

H:\Projects-SLR\660-SrvWOL\660-WOL\660.30255.00000 Detailed Geotechnical Analysis and Desig\06 SLR Data\01 CADGIS\CAD\660.30255-G-1000.dwg

EXCAVATION

71. SUB VERTICAL EXCAVATION MUST NOT EXCEED 1.5m DEPTH PRIOR TO INSPECTION BY A SUITABLY QUALIFIED GEOTECHNICAL ENGINEER.
72. WHERE UNFAVOURABLE EXCAVATION CONDITIONS EXIST SUCH AS SHALLOW LARGE FLOATING BOULDERS, SEEK ENGINEERING ADVICE FROM A SUITABLY QUALIFIED GEOTECHNICAL ENGINEER.
73. WHERE SHALLOW BEDROCK IS ENCOUNTERED PRIOR TO DESIGN FOUNDATION DEPTH, SEEK ENGINEERING ADVICE FROM A SUITABLY QUALIFIED GEOTECHNICAL ENGINEER.
74. TEMPORARY CUT FACES TO BE BATTERED BACK TO A SUITABLE SLOPE TO MAINTAIN STABILITY AT ALL TIMES.
75. DELINEATE A MINIMUM EXCLUSION ZONE FROM THE EDGE OF THE EXCAVATION EQUAL TO THE HEIGHT OF EXCAVATION AT ALL TIMES. NO SURCHARGE LOADS ARE TO THE PLACED WITHIN THIS ZONE SUCH AS VEHICLES AND /OR CONSTRUCTION MATERIALS.
76. IF ENCOUNTERED, CARE SHALL BE TAKEN TO MINIMISE DISTURBANCE TO THE UNDERLYING DRYSTONE WALL. ANY DISLODGED DRYSTONE AND/OR VOID CREATED BY EXCAVATION SHALL BE REPLACED AND INFILLED WITH GRANULAR FILL.
77. EXCAVATED MATERIALS SHALL BE STOCKPILED WITH HEIGHT NOT EXCEEDING 2 M.
78. CREATE SEPARATE STOCKPILES FOR DIFFERENT SOIL TYPES. DO NOT MIX SUBGRADE WITH PAVEMENT OR TOPSOIL. PROVIDE ADEQUATE WATERING, DRAINAGE AND EROSION CONTROL.
79. DO NOT ALLOW TRAFFIC ON STOCKPILES.
80. ALL FINAL SURFACES SHALL BE CONSTRUCTED TO MATCH EXISTING LEVELS UNLESS OTHERWISE APPROVED BY THE PRINCIPAL.

DRAINAGE (GENERAL)

81. PRIOR TO CONSTRUCTION OF THE SURFACE DRAIN SPECIAL CONSIDERATION SHALL BE MADE IN CONSTRUCTING THE CUTOFF SUBSOIL DRAINAGE WHICH SHALL BE CONNECTED TO THE LOCAL DRAINAGE NETWORK.
82. RESHAPE THE EXISTING SURFACE DRAINAGE AND LINED WITH 40MPA SHOTCRETE WITH DOSAGE RATE OF 15KG/M3.
83. STEEL FLOAT ALL SHOTCRETE SURFACES.

GABIONS AND RENO MATTRESS

84. GABIONS: DOUBLE TWISTED, HEXAGONAL WIRE MESH GABIONS OF NOMINAL 80x100 MESH, WITH 3.4mm O/D FRAME WIRE AND 2.7mm MESH WIRE, COMPLETE WITH DIAPHRAGMS AT 1M CENTRES. ALL COMPONENTS TO BE MECHANICALLY CONNECTED AT THE PRODUCTION FACILITY WITH MINIMUM CONNECTION STRENGTH REQUIREMENTS AS PER TABLE 2 OF ASTM A975, INSTALLED IN ACCORDANCE WITH MANUFACTURER'S SPECIFICATIONS.
85. ALL WIRE SHALL BE MILD STEEL, GALMAC COATED (95% ZINC + 5% ALUMINIUM MISCHMETAL ALLOY) TO THE REQUIREMENTS OF ASTM B750-99 AND HEAT BONDED THROUGH EXTRUSION WITH AN ADDITIONAL 0.5MM HEAVY DUTY GREY PVC COATING.
86. GABIONS MUST HAVE A VALID BRITISH BOARD OF AGRÉMENT (BBA) CERTIFICATE FOR GALFAN + PVC WIRE.
87. THE GABION FILL MATERIAL SHALL BE IN ACCORDANCE WITH AS 2758.4 - 2000. THE MINIMUM ROCK SIZE SHALL BE 100mm AND THE MAXIMUM ROCK SIZE SHALL BE 250mm.
88. BIDIM A34 NON-WOVEN GEOTEXTILE (OR APPROVED EQUIVALENT) TO BE PLACED AT ALL ROCKFILL-SOIL INTERFACE, INSTALLED IN ACCORDANCE WITH MANUFACTURER'S SPECIFICATIONS.
89. ROCK FILL MATERIAL BEHIND THE GABION SHALL HAVE A MINIMUM SIZE OF 75mm AND MAXIMUM SIZE OF 200mm. ROCK FILL TYPE A MATERIAL SHALL BE IN ACCORDANCE WITH AS 2758.4-2000.

PILES AND FOUNDATIONS

90. THE BEARING CAPACITY AT FOUNDING LEVEL SHALL BE VERIFIED BY A SUITABLY QUALIFIED GEOTECHNICAL ENGINEER PRIOR TO PLACEMENT OF CONCRETE.
91. THE FOUNDATION MATERIAL SHALL BE INSPECTED BY A SUITABLY QUALIFIED GEOTECHNICAL ENGINEER TO CONFIRM THE EXPOSED FOUNDATION MATERIAL SATISFIES THE DESIGN ASSUMPTIONS. ANY MATERIAL ASSESSED TO BE UNSUITABLE (INCLUDING EXISTING FILL) SHALL BE REMOVED AND REPLACED.
92. CLEANLINESS OF PILE BASES SHALL BE CONFIRMED ON SITE BY A SUITABLY QUALIFIED GEOTECHNICAL ENGINEER PRIOR TO CASTING OF PILES.
93. ALL BORED PILE WORK SHALL BE IN ACCORDANCE WITH AS2159.
94. STEEL CASING (IF REQUIRED) AND REINFORCING CAGE SHALL BE SECURELY AND ACCURATELY HELD IN POSITION DURING CONCRETE PLACEMENT.
95. BORED PILES SHALL BE CONCRETED ON THE DAY OF APPROVAL UNLESS PERMISSION IS GIVEN OTHERWISE.
96. BORED PILE TOE LEVELS, WHERE SHOWN ARE ESTIMATES ONLY AND SHALL BE ESTABLISHED DURING SITE INSPECTION OF WORK IN PROGRESS.

CONCRETE

97. MINIMUM 28 DAY CHARACTERISTIC COMPRESSIVE STRENGTH OF ALL CONCRETE IS 40 MPa.
98. COVER TO REINFORCEMENT NEAREST TO THE CONCRETE SURFACE SHALL BE 50MM UNLESS NOTED OTHERWISE.
99. BOTTOM COVER FOR FOOTINGS SHALL BE 75mm UNLESS NOTED OTHERWISE.
100. DETAILS OF THE PROPOSED MIX TO BE SUBMITTED & APPROVAL OBTAINED PRIOR TO POURING ANY CONCRETE.
101. IN LIEU OF TRIAL MIX OF CONCRETE TO BE USED, RECENT TRIALS AND PRODUCTION RUNS FOR SIMILAR MIX DESIGNS MAY BE SUBMITTED FOR CONSIDERATION AS EVIDENCE OF COMPLIANCE WITH THE REQUIREMENTS OF THIS SPECIFICATION WITH REGARD TO MIX DESIGN.
102. THE CONTRACTOR SHALL ALLOW AT LEAST 1 TEST SECTION EVERY 25 CUBIC METRE OF CONCRETE MIX BROUGHT TO SITE TO DEMONSTRATE COMPLIANCE WITH THIS DOCUMENT. THE FOLLOWING TEST CYLINDERS AND TEST DATA SHALL BE OBTAINED FROM EACH TEST SECTION:
    A. 7 DAY COMPRESSIVE STRENGTH - 3 CYLINDERS
    B. 14 DAY COMPRESSIVE STRENGTH - 3 CYLINDERS
    C. 28 DAY COMPRESSIVE STRENGTH - 3 CYLINDERS
103. THE AVERAGE STRENGTH OF THE THREE CYLINDERS TESTED AT 28 DAYS SHALL EXCEED THE SPECIFIED CHARACTERISTIC STRENGTH BY AT LEAST 1.65 TIMES THE STANDARD DEVIATION OF THE RESULTS FOR THAT TRIAL MIX.
104. CONCRETE NOT IN ACCORDANCE WITH THIS SPECIFICATION OR CONCRETE WHICH IS DEFECTIVE SHALL, AT THE DIRECTION OF THE PRINCIPAL, BE REMOVED FROM THE JOB AND REPLACED BY THE CONTRACTOR.
105. THE CONCRETE SHALL BE PLACED IN SUCH A MANNER TO AVOID SEGREGATION OR LOSS OF MATERIALS. MAXIMUM FALL OF CONCRETE 1500mm OR USE ENCLOSED CHUTES OR SIMILAR.
106. ALL EXTERNAL HORIZONTAL SURFACES TO HAVE A NOMINAL SURFACE FALL TO PREVENT WATER COLLECTION AND PONDING.

CONCRETE CURING

107. CURING COMPOUNDS SHALL ONLY BE USED ON APPROVAL FROM THE PRINCIPAL. THEY SHALL BE WAX BASED, BE SUITABLY COLOURED FOR IDENTIFICATION PURPOSES, AND SHALL BE TESTED AND MEET ALL OF THE REQUIREMENTS OF AS 3799 - "LIQUID MEMBRANE-FORMING CURING COMPOUNDS FOR CONCRETE".
108. CURING COMPOUNDS SHALL BE SUITABLY COLOURED FOR IDENTIFICATION PURPOSES.
109. THE CONTRACTOR SHALL DEMONSTRATE TO THE PRINCIPAL THAT THE CURING COMPOUND IS SUITABLE FOR ALL AMBIENT TEMPERATURES, AND THE PARTICULAR CURING COMPOUND SHALL BE APPROVED PRIOR TO USE.
110. CURING COMPOUNDS SHALL NOT BE BASED ON PVA OR CHLORINATED RUBBER.
111. CURING COMPOUNDS SHALL BE SUPPLIED WITH A CERTIFICATE OF COMPLIANCE FROM THE MANUFACTURER IN ACCORDANCE WITH AS 3799 - SECTION 3.3. A COPY OF THIS SHALL BE PROVIDED TO THE PRINCIPAL PRIOR TO CONCRETE BEING MIXED.
112. WATER FOR CURING SHALL BE POTABLE WATER WITH A pH BETWEEN 5 AND 7, AND SHALL NOT CONTAIN IMPURITIES IN SUFFICIENT QUANTITY TO CAUSE DISCOLOURATION OF THE CONCRETE.
113. STEAM CURING IS NOT PERMITTED.

REINFORCEMENT (FOOTINGS)

114. STEEL REINFORCEMENT MUST BE IN ACCORDANCE WITH AS 4671, DOWELS MUST COMPLY WITH AS 3679.1.
115. MESH REINFORCEMENT SIZE MUST BE IN ACCORDANCE WITH DRAWING DETAILS.
116. REINFORCEMENT MAY BE DISPLACED SLIGHTLY WHERE NECESSARY TO CLEAR DOWELS, ANCHOR BOLTS, FORMED HOLES AND RECESSES.
117. AUSTRALIAN STANDARD BAR SHAPES ARE IN ACCORDANCE WITH AS 1100.501.
118. BAR SIZE IS THE NOMINAL DIAMETER IN MILLIMETRES, OR THE AS/NZS 4671 FABRIC NUMBER.
119. THE GRADE OF REINFORCEMENT, IF NOT STATED ON THE DRAWINGS SHALL BE D500N TO AS/NZS 4671.
120. BAR BENDING AND HOOK DETAILS SHALL BE IN ACCORDANCE WITH SECTION 5.13 OF AS 5100.
121. LAPS NOT SHOWN ON THE DRAWINGS SHALL BE STAGGERED SO THAT NO MORE THAN 50% OF BARS ARE LAPPED IN ANY CROSS SECTION.
122. REINFORCEMENT SYMBOLS COMMONLY USED ARE:
    N DENOTES GRADE 500 MPa N BARS TO AS 4671.
    R DENOTES GRADE 250 R HOT ROLLED PLAIN BARS TO AS 4671.
    SL DENOTES SQUARE REINFORCING FABRIC TO AS 4671.
    RL DENOTES RECTANGULAR REINFORCING FABRIC TO AS 4671.
    LTM DENOTES TRENCH MESH WHICH SHALL COMPLY WITH AS 4671.
123. THE METHOD USED TO LABLE REINFORCEMENT ON THE DRAWINGS IS AS FOLLOWS:

STRUCTURAL STEEL

124. ALL WORKMANSHIP AND MATERIALS SHALL BE IN ACCORDANCE WITH AS4100 AND AS1554 EXCEPT WHERE VARIED BY THE CONTRACT DOCUMENTS.
125. ALL MATERIAL TO BE GRADE 250 HOT ROLLED PLATES COMPLYING WITH AS 3678 U.N.O.
126. WELDING SHALL BE CARRIED OUT IN ACCORDANCE WITH AS 1554.1 AND SHALL BE GP CATEGORY U.N.O.
127. WELDING CONSUMABLES SHALL BE E49XX OR W5OX.
128. INSPECTION SHALL BE CARRIED OUT TO AS 1554.1
129. IT IS THE CONTRACTOR'S RESPONSIBILITY TO ENSURE THAT STEELWORK IS SECURELY BRACED TEMPORARILY AS NECESSARY TO STABILISE THE STRUCTURE DURING ERECTION.
130. THE BUILDER SHALL PROVIDE ALL CLEATS AND DRILL ALL HOLES NECESSARY FOR FIXING STEEL TO STEEL WHETHER OR NOT DETAILED ON THE DRAWINGS.

SEALANTS AND FILLERS

131. WHERE JOINTS DAYLIGHT AT FORMED JOINTS OR EDGES, THE SEALANT (BOTH TEMPORARY AND PERMANENT) MUST EXTEND DOWN THE VERTICAL FACE OF JOINTS TO PREVENT THE INGRESS OF INCOMPRESSIBLES DURING SUBSEQUENT PAVING. DIMENSIONS MUST BE EQUIVALENT TO THOSE FOR THE TOP JOINT BUT ROTATED 90°.
132. SEALANTS AND FILLERS MUST COMPLY WITH RMS R83.

DRILLING OF SOIL NAIL HOLES

133. DRILLING FOR NAILS AND ANCHORS IS EXPECTED TO ENCOUNTER RELATIVELY HIGH STRENGTH COLLUVIUM BOULDERS AND BEDROCK. SELECTION OF DRILLING EQUIPMENT TO BE SUITABLE FOR EXPECTED GROUND CONDITIONS. USE ROTARY OR ROTARY-PERCUSSION METHODS AND EQUIPMENT FOR DRILLING TO ENSURE MINIMAL REMOLDING OF IN-SITU MATERIALS WITHIN THE DRILL HOLES. DO NOT USE DRILLING FLUIDS OTHER THAN AIR, UNLESS OTHERWISE APPROVED BY THE PRINCIPAL.
134. THE CONTRACTOR SHALL INSTALL TEMPORARY CASING TO PREVENT DRILL-HOLE COLLAPSE WHERE REQUIRED.
135. WHERE THE GROUND IS SUSCEPTIBLE TO COLLAPSE CASING SHALL BE USED.
136. HOLE SHALL BE CLEANED OF ALL LOOSE OR DELETERIOUS MATERIAL ON COMPLETION OF DRILLING AND THE OPENING SEALED TO PREVENT ENTRY FROM FOREIGN MATTER.

SOIL NAIL AND FACING REINFORCEMENT

137. SOIL NAILS TO BE DOUBLE ENCAPSULATED AND HOT-DIP GALVANIZED IN ACCORDANCE WITH AS4680.
138. DRILL HOLES FOR NAILS MUST BE AT LEAST 150mm DIAMETER AND PREPARED AS PER TFNSW R64 U.N.O.
139. SOIL NAILS TO BE GRADE D500N OR EQUIVALENT HIGH STRENGTH DEFORMED BARS.
140. SOIL NAILS MUST BE INSTALLED AS SHOWN IN THE SCHEDULES.
141. PROVIDE CENTRALISERS FOR NAILS AT INTERVAL NOT EXCEEDING 2000mm.
142. STEEL MESH MUST BE GRADE D500N IN ACCORDANCE WITH AS4671.
143. BEARING PLATE MUST BE GRADE D250N IN ACCORDANCE WITH AS3678
144. SOIL NAIL FACING SHOTCRETE COVER TO REINFORCEMENT FROM AIR = 50mm
145. SOIL NAIL FACING SHOTCRETE COVER TO REINFORCEMENT FROM GROUND = 75mm
146. SOIL NAIL 40mm COVER IS ACCEPTABLE TO STRIP DRAIN. CONSTRUCTION METHODOLOGY TO ENSURE COVER TO STRIP DRAIN IS ACHIEVED. LOCAL ADDITIONAL EXCAVATION MAY BE REQUIRED.
147. STEEL MESH MUST BE LAPPED AT ONE LOCATION NEATLY BY THREE WIRES SO AS NOT TO CREATE SHADOW IN THE SHOTCRETE.
148. ALL STEEL MESH LAPS AND STARTER BARS SHALL BE CLEANED TO BARE MESH PRIOR TO FIXING THE ADJOINING STEEL OR SPRAYING THE NEXT PANEL.
149. STEEL MESH LAPS MUST BE STAGGERED AND CUT SUCH THAT ONLY TWO SHEETS ARE LAPPED AT ONE LOCATION. LAPS ARE NOT ALLOWED OVER STRIP DRAINS.
150. NAILS, BEARING PLATES, WASHERS AND ALL STEEL REINFORCEMENT MUST BE HOT DIP GALVANISED AND IN ACCORDANCE WITH AS4680 WITH A COATING WEIGHT OF 600G/M2.
151. NAIL NUTS MUST BE GRADE C COMPLYING WITH AS1112.3 AND PROPERTY CLASS 5 COMPLYING WITH AS4291.2 OR EQUIVALENT TO SUIT THE THREADED END OF SOIL NAIL.

CONSULTANT PROJECT 660.30255 FULL SIZE ON ORIGINAL 0 10 20 40 60 80 100 A1

PLOT DATE 22-Feb-2023 4:11:48 PM

REVISIONS

	DATE	DESCRIPTION	
1	24.02.2023	ISSUED FOR CONSTRUCTION	DT

THIS DRAWING IS NOT TO BE USED FOR CONSTRUCTION UNLESS ENDORSED BELOW

Responsible Principal Signature | Date

		DATE:
DRAWN:	WP/GL	20.10.2022
DESIGN:	MB/DT	19.10.2022
DRG. CHECK:	MB	24.10.2022
DES. CHECK:	DT	25.10.2022

SLR
LEVEL 1, THE CENTRAL BUILDING
INNOVATION CAMPUS, SQUIRES WAY
NORTH WOLLONGONG NSW 2500
AUSTRALIA
T: +61 2 4249 1004
F: +61 2 4249 1000
www.slrconsulting.com

Shoalhaven City Council

FOR CONSTRUCTION

CLIENT: SHOALHAVEN CITY COUNCIL

PROJECT: LANDSLIDE REMEDIATION DESIGN OF VARIOUS SITES

DRAWING TITLE: GENERAL NOTES SHEET 2

A1 | DO NOT SCALE THIS DRAWING IF IN DOUBT ASK | SCALE: N/A | DRAWING NUMBER: 660.30255-G-1003 | ISSUE: 1

H:\Projects-SLR\660-SrvWOL\660-WOL\660.30255.00000 Detailed Geotechnical Analysis and Desig\06 SLR Data\01 CADGIS\CAD\660.30255-G-1000.dwg

GROUT REQUIREMENTS

152. GROUTS MUST HAVE HIGH BLEED RESISTANCE, LOW SHRINKAGE AND HIGH FLUIDITY. DO NOT USE ADDITIVES OR ADMIXTURES WITHOUT THE APPROVAL OF THE PRINCIPAL.
153. MINIMUM COMPRESSIVE STRENGTH OF GROUT MUST BE 40MPA AT 28 DAYS.
154. GROUT FLUIDITY, BLEED AND COMPRESSIVE STRENGTH TESTING TO BE IN ACCORDANCE WITH TFNSW R64 CLAUSE 3.4.3

SOIL NAIL TESTING PROCEDURE

155. NAIL TESTING TO BE CONDUCTED IN ACCORDANCE WITH TFNSW R64.
156. CONTRACTOR TO CONFIGURE TEST NAILS (INCLUDING NAIL DIAMETER AND BEARING PLATE) TO ENSURE 200% OF THE WORKING BOND STRESS CAN BE ACHIEVED PRIOR TO 80% OF THE BAR YIELD LOAD.
157. SUITABILITY TESTING ARE TO BE COMPLETED PRIOR TO INSTALLATION OF PRODUCTION NAILS.
158. A TOTAL OF 3% OF PERMANENT NAILS SHALL BE SUBJECTED TO ACCEPTANCE TESTS .
159. LOCATIONS OF THE SUITABILITY AND ACCEPTANCE TEST SOIL NAILS TO BE CONFIRMED ON SITE.

SHOTCRETE

160. SHOTCRETE TO BE IN ACCORDANCE WITH TFNSW R68.
161. MINIMUM COMPRESSIVE STRENGTH OF SHOTCRETE MUST BE 40MPA AT 28 DAYS. USE SHRINKAGE LIMITED CEMENT IN SHOTCRETE IN ACCORDANCE WITH SPECIFICATION TFNSW R68 AND TFNSW QA3211.
162. SHOTCRETE MIX DESIGN TO EXPOSURE CLASSIFICATION B:2 IN ACCORDANCE WITH TFNSW R64 CLAUSE 2.3.3.
163. SHOTCRETE QUALITY TESTING IN ACCORDANCE WITH TFNSW R68 CLAUSE 8.5 AND ANNEXURE R68/L.
164. APPROPRIATE THICKNESS GAUGES SHALL BE FIXED TO THE STEELWORKS TO ALLOW PROOF OF ADEQUATE COVER.

FIBRECRETE

165. FIBRECRETE TO BE IN ACCORDANCE WITH TFNSW B82.
166. MINIMUM COMPRESSIVE STRENGTH OF FIBRECRETE MUST BE 40MPA AT 28 DAYS. USE SHRINKAGE LIMITED CEMENT IN FIBRECRETE IN ACCORDANCE WITH SPECIFICATION TFNSW B82 AND TFNSW QA3211.
167. FIBRECRETE MIX DESIGN TO EXPOSURE CLASSIFICATION B:2 IN ACCORDANCE WITH TFNSW R64 CLAUSE 2.3.3.
168. SHOTCRETE QUALITY TESTING IN ACCORDANCE WITH TFNSW B82.
169. APPROPRIATE THICKNESS GAUGES SHALL BE FIXED TO THE STEELWORKS TO ALLOW PROOF OF ADEQUATE COVER.

DRAINAGE (SOIL NAILING)

170. 150mm HDPE STRIP FILTER DRAIN (FLEXIBLE CUSPATED DRAINS) TO BE IN ACCORDANCE WITH TFNSW QA3557.
171. BOTTOM OF THE STRIP DRAINS DAYLIGHT AT BOTTOM OF SHOTCRETE WALL FACING.
172. HDPE STRIP DRAIN TO BE CORRUGATED CORE PERFORATED AND MUST BE INSTALLED DIAGONALLY ACROSS SLOPE FACE AT 45°.
173. STRIP DRAINS MUST BE CHASED INTO SOIL SLOPE TO ALLOW FULL SHOTCRETE THICKNESS AT ALL LOCATIONS.
174. WHERE CONNECTION IS TO BE MADE TO AN EXISTING DRAINAGE STRUCTURE OR OPEN DRAIN THE POSITION AND LEVEL OF EXISTING DRAINAGE STRUCTURE SHALL BE CONFIRMED PRIOR TO CONSTRUCTION. BLEND CONNECTIONS SMOOTHLY TO ENSURE PROPER DRAINAGE AT ALL POINTS.

SPECIFICATIONS (SOIL NAILING)

175. ALL SOIL NAILING MATERIALS AND WORK IS TO COMPLY WITH THE FOLLOWING TFNSW PROJECT SPECIFIC SPECIFICATIONS:
    - A. R64 SOIL NAILING
    - B. R68 SHOTCRETE WITHOUT FIBRES
    - C. B82 SHOTCRETE WITH FIBRES
    - D. R178 REVEGETATION
176. ALL SOIL NAILING MATERIALS AND WORK IS TO COMPLY WITH THE FOLLOWING TFNSW QA STANDARD SPECIFICATIONS:
    - A. R23 PLASTIC FLEXIBLE PIPES
    - B. R53 CONCRETE FOR GENERAL USE MORTAR AND GROUT
    - C. R55 ROCK FILLED GABIONS AND MATTRESSES
    - D. R63 GEOTEXTILES
    - E. R71 UNBOUND AND MODIFIED PAVEMENT COURSE
    - F. 3557 FLEXIBLE STRIP FILTER DRAINS

SAFETY BARRIERS

177. RAIL AND RAIL STIFFENING PIECES ARE FROM 2.7 OR 3.5 BMT GRADE HA350 STEEL TO AS 1594 AND HOT DIP GALVANISED TO AS 4680 AFTER FABRICATION. FLAME CUTTING TO RAIL IS NOT PERMITTED. RAIL TO BE STAMPED 350/2.7 BMT (OR SIMILAR).
178. RAIL 2.7BMT CAN BE SUPPLIED CURVED TO A MINIMUM RADIUS OF 5000. RAIL 3.5BMT CAN BE SUPPLIED CURVED TO A MINIMUM RADIUS OF 6000.
179. POSTS AND BLOCKOUT PIECES ARE FROM 4.3 BMT PLATE GRADE HA300 STEEL TO AS 1594 AND HOT DIP GALVANISED TO AS 4680 AFTER FABRICATION.
180. BMT = BASE METAL THICKNESS.
181. STEEL BASE PLATE AND BOTTOM PLATE ARE TO AS 3678, GRADE HD250. POSTS TO BE WELDED TO BASE PLATE. POSTS AND PLATES HOT DIP GALVANISED TO AS 4680 AFTER FABRICATION
182. HEXAGON BOLTS TO AS 1111 (GRADE 4.6). HEXAGON NUTS TO AS 1112 (GRADE 5). NUTS SHALL BE TAPPED TO SUIT GALVANISED THREADS. BLACK STEEL WASHERS, LARGE SERIES TO AS 1237. BOLTS, NUTS AND WASHERS SHALL BE HOT DIP GALVANISED IN ACCORDANCE WITH THE REQUIREMENTS OF AS 1214.
183. NUTS SHALL BE SNUG TIGHT TO AS 4100.
184. TERMINAL CONNECTORS ARE FROM 2.7 BMT GRADE HA350 STEEL TO AS 1594 AND HOT DIP GALVANISED TO AS 4680 AFTER FABRICATION.
185. DIMENSIONS ARE SUBJECT TO MANUFACTURER'S TOLERANCES EXCEPT WHERE ALLOWABLE TOLERANCES ARE NOMINATED. TRAFFIC BARRIERS SHOULD SATISFY R132.

HOLD POINTS, WITNESS POINTS AND APPROVALS

186. A SUITABLY QUALIFIED GEOETCHNICAL ENGINEER TO BE PRESENT ON SITE DURING CONSTRUCTION. GROUND CONDITIONS AND DESIGN ASSUMPTIONS SHALL BE VALIDATED DURING CONSTRUCTION.
187. THE CONTRACTOR SHALL PROVIDE TO THE PRINCIPAL'S REPRESENTATIVE A MINIMUM OF 2 WORKING DAYS' NOTICE FOR ANY INSPECTION AND 7 DAYS FOR ANY REVIEWS OF SHOP DRAWINGS AND ALTERNATIVE DESIGNS.
188. THE GENERAL AND PROJECT START UP MANDATORY HOLD POINTS ARE:
    - A. REVIEW & RELEASE OF WHS PLAN, INCLUDING SWMS.
    - B. REVIEW & RELEASE OF CONSTRUCTION STAGING PLANS.
    - C. REVIEW & RELEASE OF CONSTRUCTION PROGRAM.
    - D. REVIEW & RELEASE OF CONSTRUCTION ENVIRONMENTAL SITE MANAGEMENT PLAN (CEMP).
    - E. REVIEW & RELEASE OF PROJECT QUALITY PLAN (INCLUDING ITP'S)
189. DEMOLITION (AS REQUIRED)
    - A. REVIEW & RELEASE OF METHODOLOGY FOR DEMOLITION.
    - B. WITNESS PRIOR TO COMMENCEMENT OF DEMOLITION.
    - C. PROVISION OF ANY LICENSES AND AUTHORITY APPROVALS.
190. SURVEY AND SET OUT
191. EXCAVATION AND EARTHWORKS
    - A. REVIEW & RELEASE OF METHODOLOGY FOR EXCAVATION, SHORING AND FILLING.
    - B. REVIEW & RELEASE OF IMPORTED FILL MATERIAL.
        - i. PROVIDE EVIDENCE OF SERVICE LOCATION, PRIOR TO ANY EXCAVATION, AND COMPLY TO THE PRINCIPAL'S EXCAVATION PERMIT REQUIREMENTS.
        - ii. DENSITY TEST RESULTS OF FILLED AND COMPACTED MATERIAL.
    - C. WTINESS BEARING CAPACITY OF EXCAVATIONS PRIOR TO POURING OF ANY FOUNDATIONS BY GEOTECHNICAL ENGINEER.
192. CONCRETE
    - A. REVIEW & RELEASE OF CONCRETE MIX DESIGN. THIS INCLUDES ASSESSMENT OF SLUMP TEST RESULTS ON CONCRETE DELIVERY.
    - B. REVIEW & RELEASE OF CONCRETE SURFACES (AND REINFORCEMENT CONDITION) FOLLOWING DEMOLITION, SCABBLING, CUTTING AND SAWING.
    - C. WITNESS OF COMPLETED REINFORCEMENT FIXED IN PLACE.
    - D. WITNESS OF COMPLETED FORMWORK.
    - E. REVIEW & APPROVAL OF CONCRETE TEST RESULTS.
    - F. WITNESS PRIOR TO POURING CONCRETE.
193. STRUCTURAL STEEL AND OTHER METALS
    - A. SHOP DETAILS FOR REVIEW AND COMMENT.
    - B. INSPECTION & APPROVAL OF FABRICATED ELEMENTS PRIOR TO DELIVERY.
    - C. WELD TESTING RESULTS, PRIOR TO DELIVERY.
    - D. INSPECTION & APPROVAL OF STEEL SURFACES PRIOR TO PAINTING AND PROTECTIVE COATINGS.
    - E. REVIEW & RELEASE OF METHODOLOGY FOR INSTALLATION AND ERECTION.
    - F. INSPECTION OF ERECTED STEEL WORK PRIOR TO ANY COVERINGS.
194. SOIL NAILS AND SHOTCRETE FACING
    - A. REVIEW & RELEASE OF MATERIAL CERTIFICATES (TFNSW R64 CL. 2.1).
    - B. REVIEW & RELEASE OF GROUT AND SHOTCRETE MIX, INCLUDING TEST RESULTS (TFNSW R64 CL. 2.2.7 & TFNSW R68 CL. 3.8.1).
    - C. REVIEW & RELEASE OF CONSTRUCTION METHOD STATEMENT (TFNSW R64 3.1).
    - D. INSPECTION & APPROVAL OF EXTENT OF WORKS AND SET-OUT OF NAIL LOCATIONS.
    - E. WITNESS OF INSTALLATION OF PRODUCTION NAILS (TFNSW R64 CL. 3.4).
    - F. WITNESS OF EXPOSED SLOPE FACE AFTER CLEARING OF EACH SECTION (TFNSW R64 CL. 3.3).
    - G. INSPECTION & APPROVAL OF GROUTING OF NAILS (R64 CL 3. 4. 3. 4).
    - H. REVIEW & APPROVAL OF SUITABILITY TEST RECORD (TFNSW R64 CL. 5.2.1).
    - I. REVIEW & APPROVAL OF TEST RESULTS FOR ACCEPTANCE TEST NAILS (TFNSW R64 CL. 5.2.2).
    - J. INSPECTION & APPROVAL OF SURFACE PREPARATION FOR MESH PLACEMENT AND SHOTCRETING TFNSW R64 CL. 6.2 & TFNSW R68 CL. 4.2).
    - K. WITNESS OF SHOTCRETE MESH PLACEMENT AND WALL DRAINAGE (R68 CL. 5.5 AND CL. 5.6).
    - L. WITNESS OF SHOTCRETE PLACEMENT (TFNSW R68 CL. 7).
    - M. REVIEW & APPROVAL OF SHOTCRETE TEST RESULTS (R68 CL 8.5).

REVISIONS			
1	24.02.2023	ISSUED FOR CONSTRUCTION	DT
	DATE	DESCRIPTION	

Responsible Principal Signature | Date

DRAWN: WP/GL	DATE: 20.10.2022	
DESIGN: MB/DT	DATE: 19.10.2022	
DRG. CHECK: MB	DATE: 24.10.2022	
DES. CHECK: DT	DATE: 25.10.2022	

SLR
LEVEL 1, THE CENTRAL BUILDING
INNOVATION CAMPUS, SQUIRES WAY
NORTH WOLLONGONG NSW 2500
AUSTRALIA
T: +61 2 4249 1004
F: +61 2 4249 1000
www.slrconsulting.com

Shoalhaven City Council

FOR CONSTRUCTION

CLIENT: SHOALHAVEN CITY COUNCIL

PROJECT: LANDSLIDE REMEDIATION DESIGN OF VARIOUS SITES

DRAWING TITLE: GENERAL NOTES SHEET 3

A1 | DO NOT SCALE THIS DRAWING IF IN DOUBT ASK | SCALE: N/A | DRAWING NUMBER: 660.30255-G-1004 | ISSUE: 1

PLOT DATE 22-Feb-2023 4:11:58 PM

CONSULTANT PROJECT 660.30255

FULL SIZE ON ORIGINAL 0 10 20 40 60 80 100 A1

H:\Projects-SLR\660-SrvWOL\660-WOL\660.30255.00000 Detailed Geotechnical Analysis and Desig\06 SLR Data\01 CAD\GIS\CAD\660.30255-G-1000.dwg

SITE DM00533 (PHOTO ON 14-06-2022)

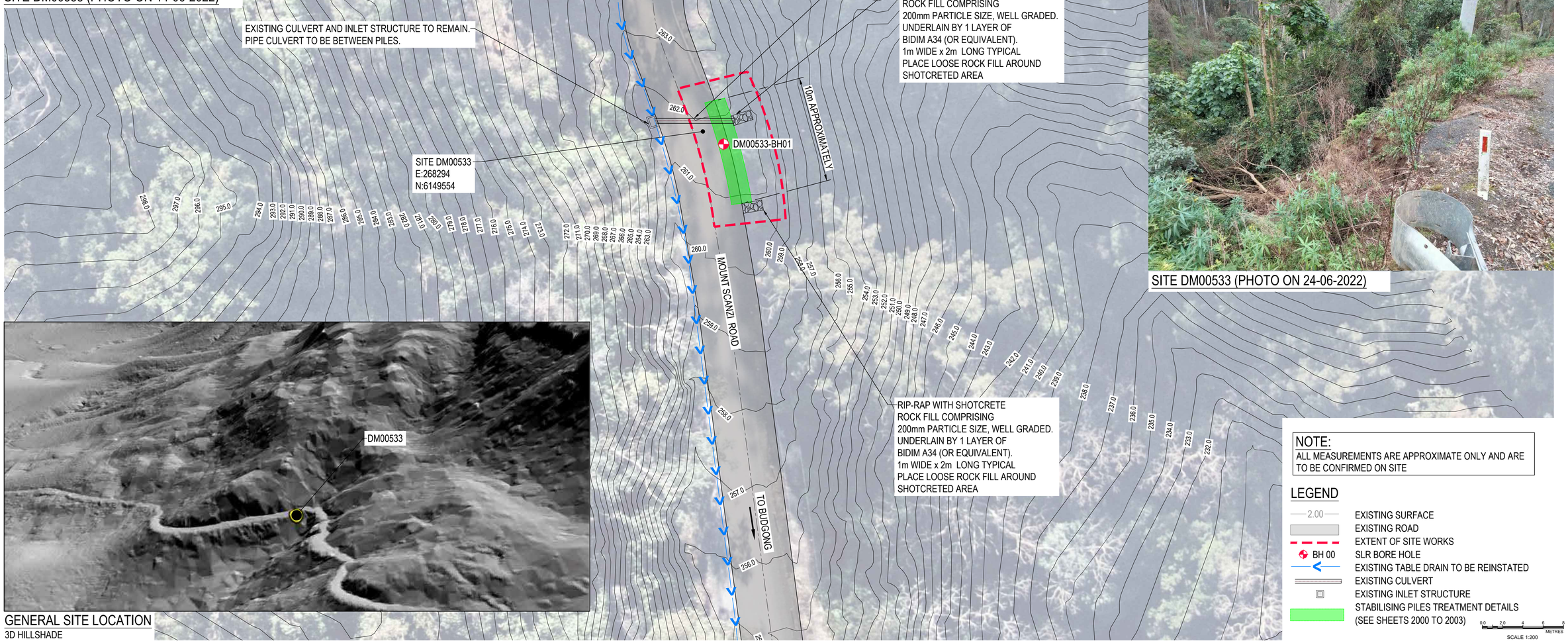

SITE DM00533 (PHOTO ON 24-06-2022)

GENERAL SITE LOCATION
3D HILLSHADE

NOTE:
ALL MEASUREMENTS ARE APPROXIMATE ONLY AND ARE TO BE CONFIRMED ON SITE

LEGEND

- 2.00 — EXISTING SURFACE
- EXISTING ROAD
- EXTENT OF SITE WORKS
- BH 00 — SLR BORE HOLE
- EXISTING TABLE DRAIN TO BE REINSTATED
- EXISTING CULVERT
- EXISTING INLET STRUCTURE
- STABILISING PILES TREATMENT DETAILS (SEE SHEETS 2000 TO 2003)

0 0 2 4 6 8 METRES
SCALE 1:200

REVISIONS			
1	24.02.2023	ISSUED FOR CONSTRUCTION	MB
	DATE	DESCRIPTION	

PLOT DATE 23-Feb-2023 8:49:07 PM

DRAWN:	WP/GL	DATE:	20.10.2022
DESIGN:	MB/DT	DATE:	19.10.2022
DRG. CHECK:	MB	DATE:	24.10.2022
DES. CHECK:	DT	DATE:	25.10.2022

SLR
LEVEL 1, THE CENTRAL BUILDING
INNOVATION CAMPUS, SQUIRES WAY
NORTH WOLLONGONG NSW 2500
AUSTRALIA
T: +61 2 4249 1004
F: +61 2 4249 1000
www.slrconsulting.com

Shoalhaven City Council

FOR CONSTRUCTION

CLIENT: SHOALHAVEN CITY COUNCIL

PROJECT: LANDSLIDE REMEDIATION DESIGN OF VARIOUS SITES

DRAWING TITLE: SITE DM00533
GENERAL ARRANGEMENT LAYOUT PLAN

A1	DO NOT SCALE THIS DRAWING IF IN DOUBT ASK	SCALE: 1:200	DRAWING NUMBER: 660.30255-G-1160	ISSUE: 1

H:\Projects-SLR\660-SrvWOL\660-WOL\660.30255.00000 Detailed Geotechnical Analysis and Desig\06 SLR Data\01 CAD\GIS\CAD\660.30255-G-1160.dwg

CONSULTANT PROJECT 660.30255 FULL SIZE ON ORIGINAL A1

SITE DM00577 (PHOTO ON 15-07-2022)

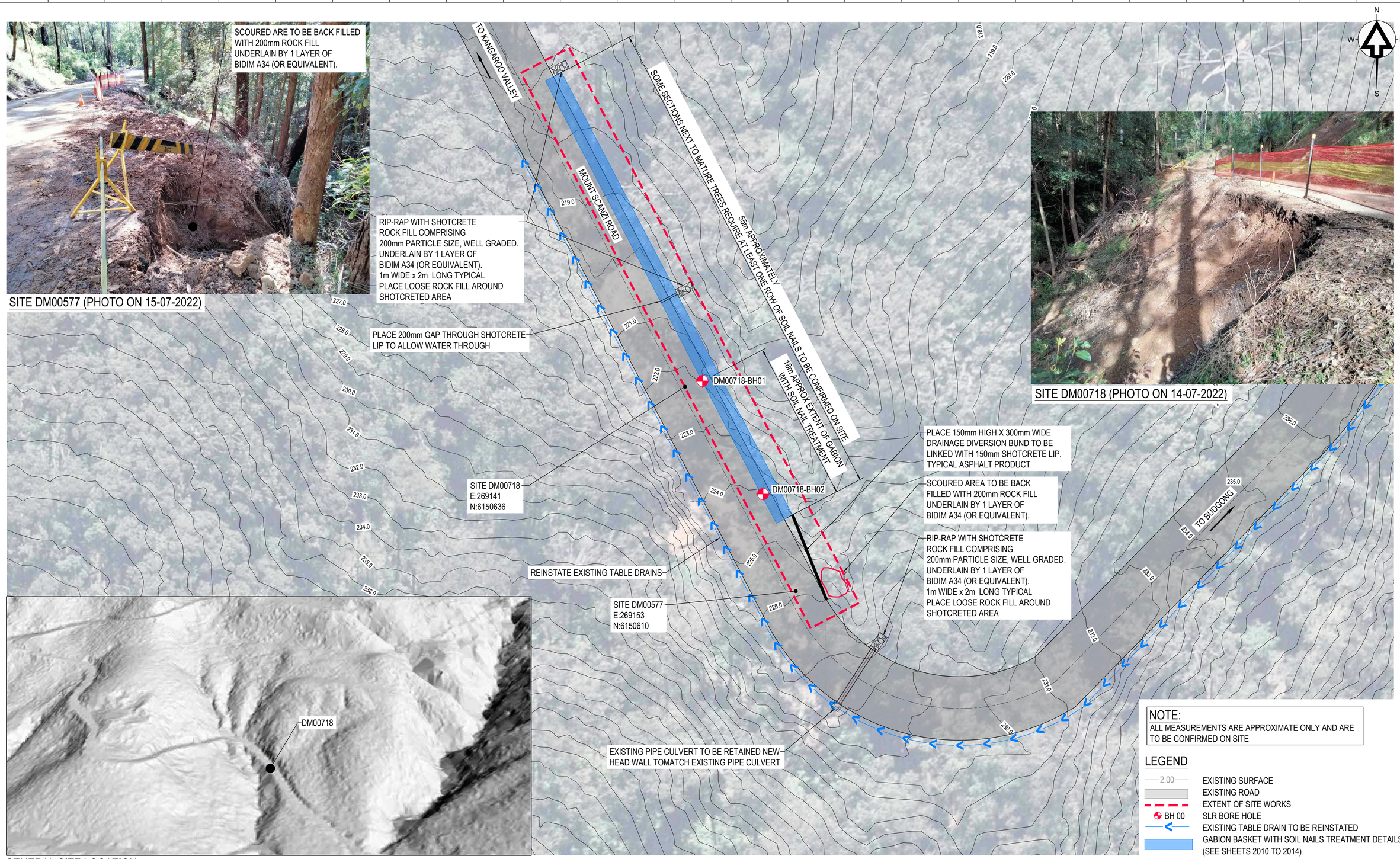

SITE DM00718 (PHOTO ON 14-07-2022)

GENERAL SITE LOCATION
3D HILLSHADE

NOTE:
ALL MEASUREMENTS ARE APPROXIMATE ONLY AND ARE TO BE CONFIRMED ON SITE

LEGEND

- 2.00 — EXISTING SURFACE
- EXISTING ROAD
- EXTENT OF SITE WORKS
- BH 00 — SLR BORE HOLE
- EXISTING TABLE DRAIN TO BE REINSTATED
- GABION BASKET WITH SOIL NAILS TREATMENT DETAILS (SEE SHEETS 2010 TO 2014)

0 0 2 4 6 8 METRES
SCALE 1:200

CONSULTANT PROJECT 660.30255 FULL SIZE ON ORIGINAL A1

REVISIONS			
1	24.02.2023	ISSUED FOR CONSTRUCTION	DT
	DATE	DESCRIPTION	

PLOT DATE 23-Feb-2023 8:49:16 PM

Responsible Principal Signature | Date

		DATE:
DRAWN:	WP/GL	20.10.2022
DESIGN:	MB/DT	19.10.2022
DRG. CHECK:	MB	24.10.2022
DES. CHECK:	DT	25.10.2022

SLR
LEVEL 1, THE CENTRAL BUILDING
INNOVATION CAMPUS, SQUIRES WAY
NORTH WOLLONGONG NSW 2500
AUSTRALIA
T: +61 2 4249 1004
F: +61 2 4249 1000
www.slrconsulting.com

Shoalhaven City Council

FOR CONSTRUCTION

CLIENT: SHOALHAVEN CITY COUNCIL

PROJECT: LANDSLIDE REMEDIATION DESIGN OF VARIOUS SITES

DRAWING TITLE: SITES DM00577 & DM00718
GENERAL ARRANGEMENT LAYOUT PLAN

A1	DO NOT SCALE THIS DRAWING IF IN DOUBT ASK	SCALE: 1:200	DRAWING NUMBER: 660.30255-G-1170	ISSUE: 1

H:\Projects-SLR\660-SrvWOL\660-WOL\660.30255.00000 Detailed Geotechnical Analysis and Desig\06 SLR Data\01 CADGIS\CAD\660.30255-G-1170.dwg

GENERAL SITE LOCATION
3D HILLSHADE

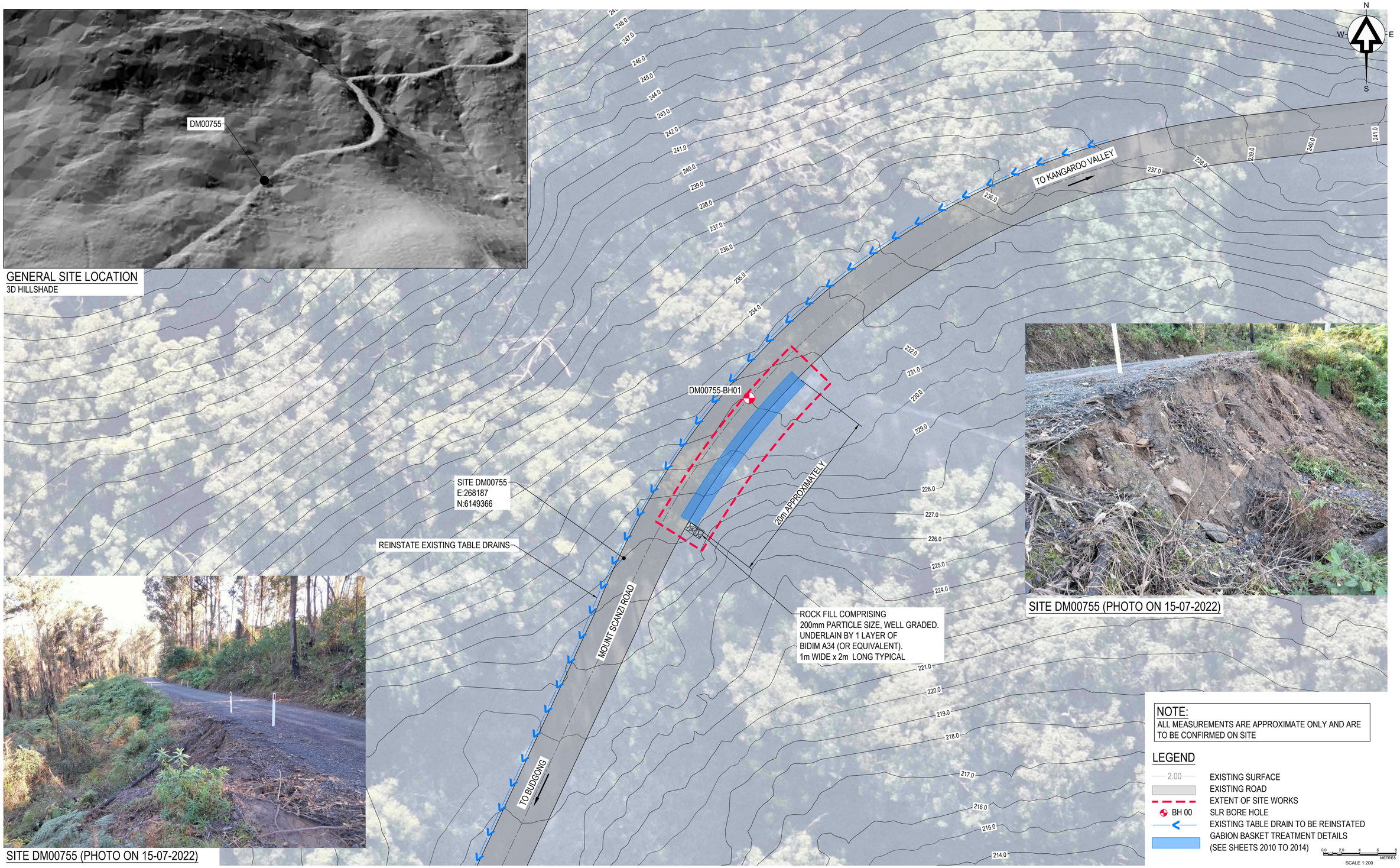

SITE DM00755 (PHOTO ON 15-07-2022)

SITE DM00755 (PHOTO ON 15-07-2022)

NOTE:
ALL MEASUREMENTS ARE APPROXIMATE ONLY AND ARE TO BE CONFIRMED ON SITE

LEGEND

2.00	EXISTING SURFACE
	EXISTING ROAD
	EXTENT OF SITE WORKS
BH 00	SLR BORE HOLE
	EXISTING TABLE DRAIN TO BE REINSTATED
	GABION BASKET TREATMENT DETAILS (SEE SHEETS 2010 TO 2014)

0.0 2.0 4 6 8 METRES
SCALE 1:200

CONSULTANT PROJECT 660.30255 FULL SIZE ON ORIGINAL 0 10 20 40 60 80 100 A1

PLOT DATE 23-Feb-2023 8:49:27 PM

REVISIONS

	DATE	DESCRIPTION	
1	24.02.2023	ISSUED FOR CONSTRUCTION	DT

THIS DRAWING IS NOT TO BE USED FOR CONSTRUCTION UNLESS ENDORSED BELOW

Responsible Principal Signature | Date

DRAWN:	WP/GL	DATE:	20.10.2022
DESIGN:	MB/DT	DATE:	19.10.2022
DRG. CHECK:	MB	DATE:	24.10.2022
DES. CHECK:	DT	DATE:	25.10.2022

SLR
LEVEL 1, THE CENTRAL BUILDING
INNOVATION CAMPUS, SQUIRES WAY
NORTH WOLLONGONG NSW 2500
AUSTRALIA
T: +61 2 4249 1004
F: +61 2 4249 1000
www.slrconsulting.com

Shoalhaven City Council

FOR CONSTRUCTION

CLIENT: SHOALHAVEN CITY COUNCIL

PROJECT: LANDSLIDE REMEDIATION DESIGN OF VARIOUS SITES

DRAWING TITLE: SITE DM00755
GENERAL ARRANGEMENT LAYOUT PLAN

A1 | DO NOT SCALE THIS DRAWING IF IN DOUBT ASK | SCALE: 1:200 | DRAWING NUMBER: 660.30255-G-1180 | ISSUE: 1

H:\Projects-SLR\660-SrvWOL\660-WOL\660.30255.00000 Detailed Geotechnical Analysis and Desig\06 SLR Data\01 CADGIS\CAD\660.30255-G-1180.dwg

GENERAL SITE LOCATION
3D HILLSHADE

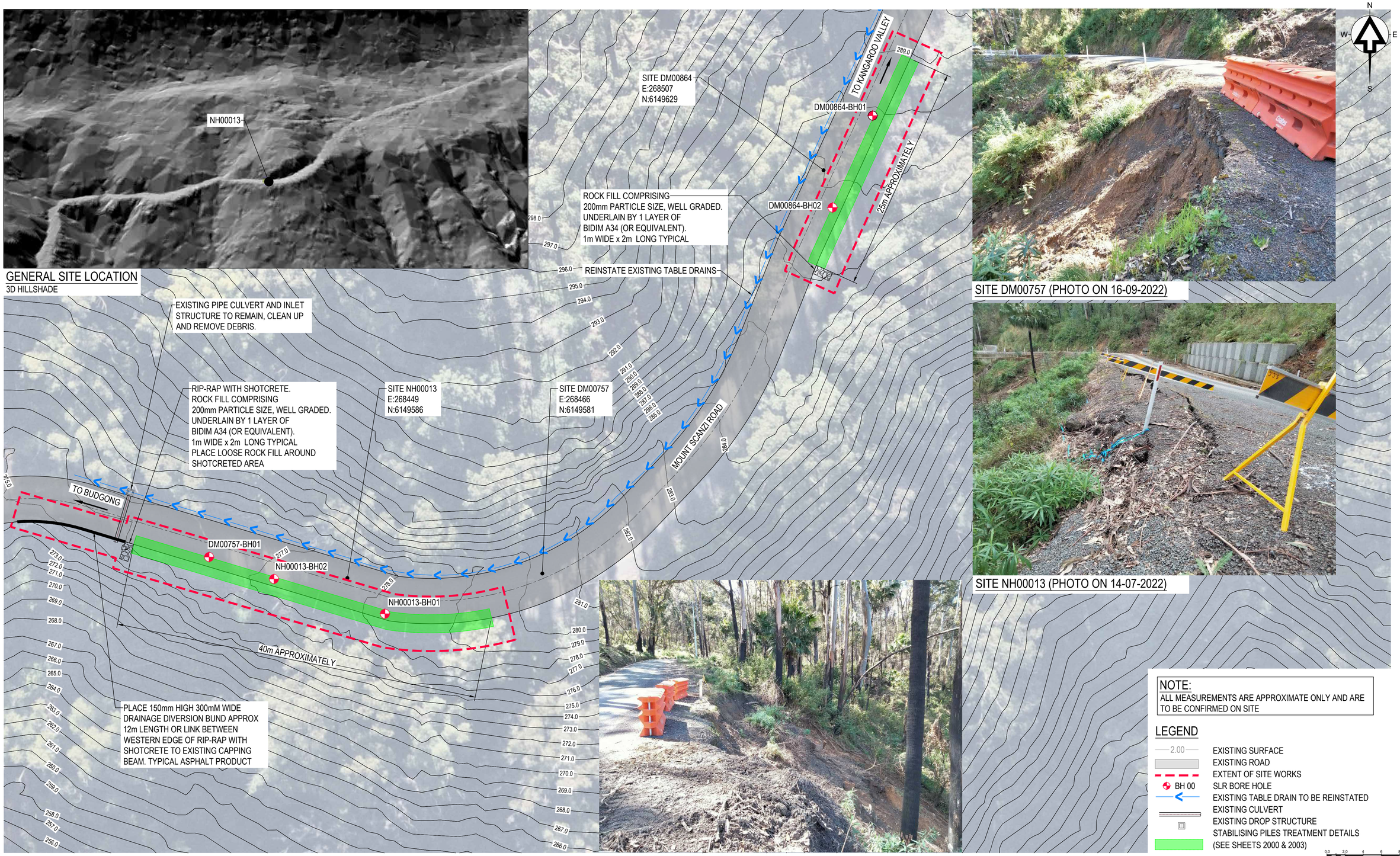

SITE DM00757 (PHOTO ON 16-09-2022)

SITE NH00013 (PHOTO ON 14-07-2022)

SITE DM00864 (PHOTO ON 16-09-2022)

NOTE:
ALL MEASUREMENTS ARE APPROXIMATE ONLY AND ARE TO BE CONFIRMED ON SITE

LEGEND

- 2.00 — EXISTING SURFACE
- EXISTING ROAD
- EXTENT OF SITE WORKS
- BH 00 — SLR BORE HOLE
- EXISTING TABLE DRAIN TO BE REINSTATED
- EXISTING CULVERT
- EXISTING DROP STRUCTURE
- STABILISING PILES TREATMENT DETAILS (SEE SHEETS 2000 & 2003)

0.0 2.0 4 6 8 METRES
SCALE 1:200

REVISIONS			
1	24.02.2023	ISSUED FOR CONSTRUCTION	DT
	DATE	DESCRIPTION	

PLOT DATE 23-Feb-2023 9:33:21 PM

THIS DRAWING IS NOT TO BE USED FOR CONSTRUCTION UNLESS ENDORSED BELOW

Responsible Principal Signature | Date

DRAWN:	WP/GL	DATE:	20.10.2022
DESIGN:	MB/DT	DATE:	19.10.2022
DRG. CHECK:	MB	DATE:	24.10.2022
DES. CHECK:	DT	DATE:	25.10.2022

SLR
LEVEL 1, THE CENTRAL BUILDING
INNOVATION CAMPUS, SQUIRES WAY
NORTH WOLLONGONG NSW 2500
AUSTRALIA
T: +61 2 4249 1004
F: +61 2 4249 1000
www.slrconsulting.com

Shoalhaven City Council

CLIENT: SHOALHAVEN CITY COUNCIL

PROJECT: LANDSLIDE REMEDIATION DESIGN OF VARIOUS SITES

DRAWING TITLE: SITES DM00757, NH00013 & DM00864
GENERAL ARRANGEMENT LAYOUT PLAN

FOR CONSTRUCTION

A1 | DO NOT SCALE THIS DRAWING IF IN DOUBT ASK | SCALE: 1:200 | DRAWING NUMBER: 660.30255-G-1190 | ISSUE: 1

CONSULTANT PROJECT 660.30255 FULL SIZE ON ORIGINAL 0 10 20 40 60 80 100 A1

H:\Projects-SLR\660-SrvWOL\660-WOL\660.30255.00000 Detailed Geotechnical Analysis and Desig\06 SLR Data\01 CADGIS\CAD\660.30255-G-1190.dwg

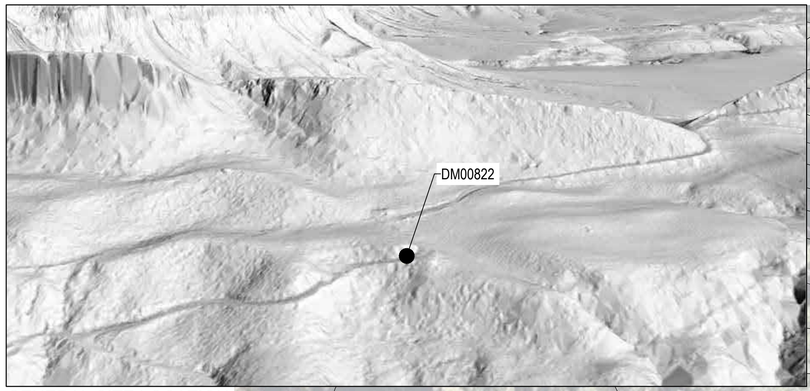

GENERAL SITE LOCATION
3D HILLSHADE

SITE DM00822 (PHOTO ON 16-09-2022)

SITE DM00822 (PHOTO ON 16-09-2022)

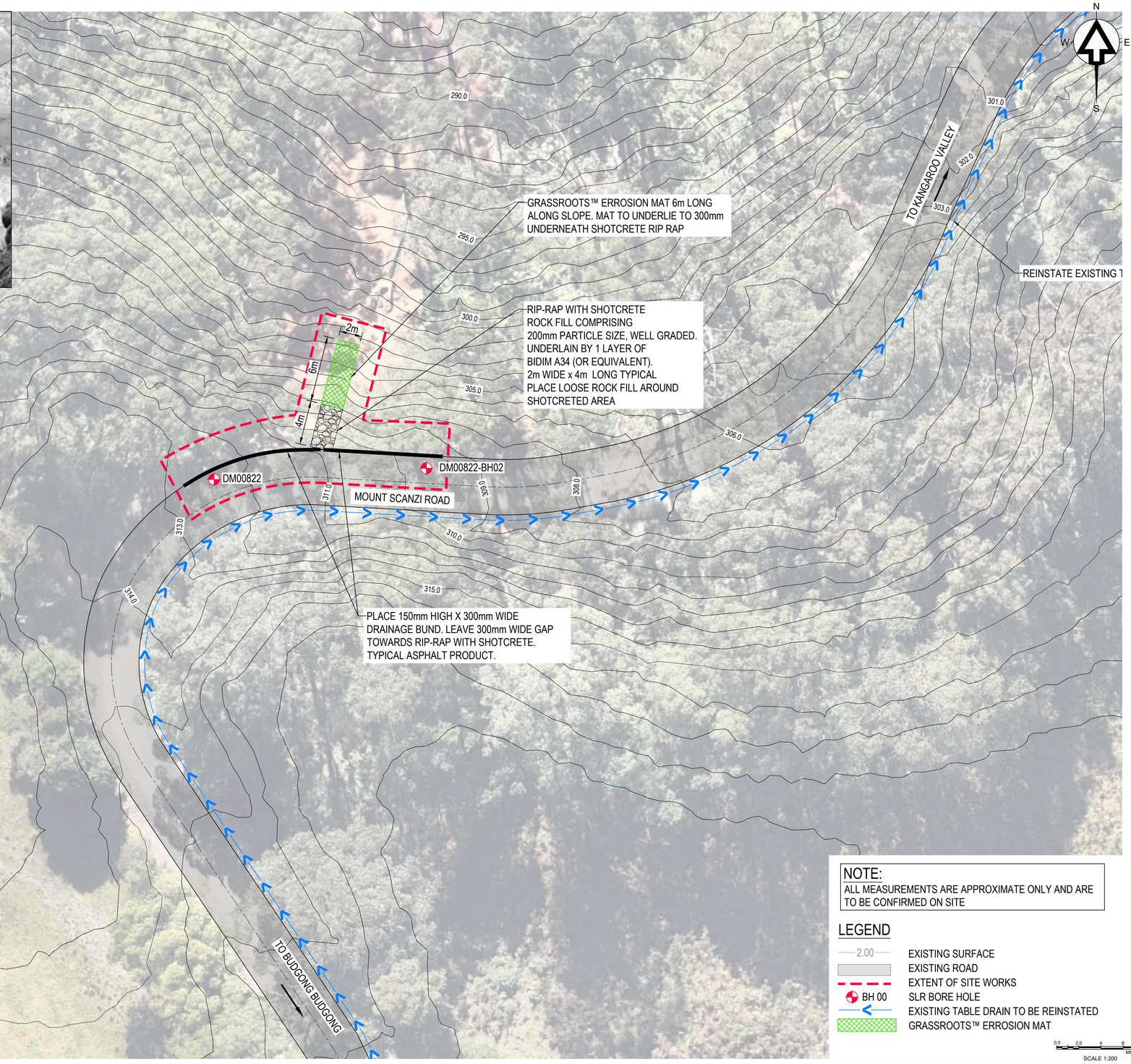

NOTE:
ALL MEASUREMENTS ARE APPROXIMATE ONLY AND ARE TO BE CONFIRMED ON SITE

LEGEND

2.00	EXISTING SURFACE
	EXISTING ROAD
	EXTENT OF SITE WORKS
BH 00	SLR BORE HOLE
	EXISTING TABLE DRAIN TO BE REINSTATED
	GRASSROOTS™ ERROSION MAT

0.0 2.0 4 6 8 METRES
SCALE 1:200

1	24.02.2023	ISSUED FOR CONSTRUCTION	DT
	DATE	DESCRIPTION	

REVISIONS

PLOT DATE 24-Feb-2023 9:01:47 AM

THIS DRAWING IS THE PROPERTY OF SLR CONSULTING AUSTRALIA AND MUST NOT BE RETAINED, COPIED OR USED WITHOUT THE CONSENT OF THE COMPANY.

THIS DRAWING IS NOT TO BE USED FOR CONSTRUCTION UNLESS ENDORSED BELOW

Responsible Principal Signature | Date

DRAWN:	WP/GL	DATE:	20.10.2022
DESIGN:	MB/DT	DATE:	19.10.2022
DRG. CHECK:	MB	DATE:	24.10.2022
DES. CHECK:	DT	DATE:	25.10.2022

SLR
LEVEL 1, THE CENTRAL BUILDING
INNOVATION CAMPUS, SQUIRES WAY
NORTH WOLLONGONG NSW 2500
AUSTRALIA
T: +61 2 4249 1004
F: +61 2 4249 1000
www.slrconsulting.com

Shoalhaven City Council

FOR CONSTRUCTION

CLIENT: SHOALHAVEN CITY COUNCIL

PROJECT: LANDSLIDE REMEDIATION DESIGN OF VARIOUS SITES

DRAWING TITLE: SITE DM00822
GENERAL ARRANGEMENT LAYOUT PLAN

A1 | DO NOT SCALE THIS DRAWING IF IN DOUBT ASK | SCALE: 1:200 | DRAWING NUMBER: 660.30255-G-1310 | ISSUE: 1

CONSULTANT PROJECT 660.30255

FULL SIZE ON ORIGINAL 0 10 20 40 60 80 100 A1

H:\Projects-SLR\660-SrvWOL\660-WOL\660.30255.00000 Detailed Geotechnical Analysis and Desig\06 SLR Data\01 CADGIS\CAD\660.30255-G-1310.dwg

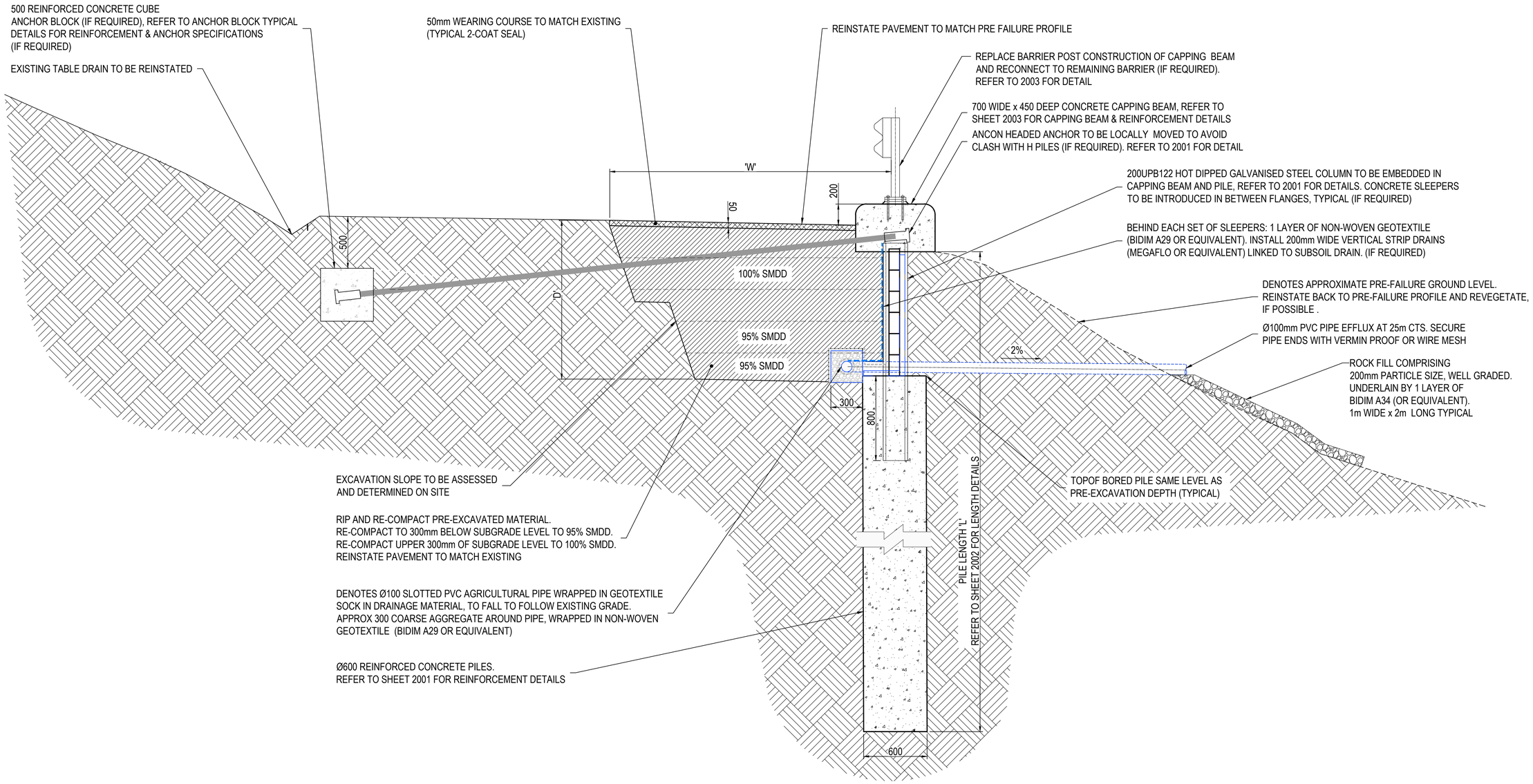

0 200 400 600 800 MILLIMETRES
SCALE 1:20

CONSULTANT PROJECT 660.30255 FULL SIZE ON ORIGINAL 0 10 20 40 60 80 100 A1

REVISIONS			
1	24.02.2023	ISSUED FOR CONSTRUCTION	DT
	DATE	DESCRIPTION	

PLOT DATE 23-Feb-2023 9:37:33 PM

THIS DRAWING IS THE PROPERTY OF SLR CONSULTING AUSTRALIA AND MUST NOT BE RETAINED, COPIED OR USED WITHOUT THE CONSENT OF THE COMPANY.

THIS DRAWING IS NOT TO BE USED FOR CONSTRUCTION UNLESS ENDORSED BELOW

Responsible Principal Signature | Date

DRAWN: WP/GL	DATE: 20.10.2022
DESIGN: MB/DT	DATE: 19.10.2022
DRG. CHECK: MB	DATE: 24.10.2022
DES. CHECK: DT	DATE: 25.10.2022

SLR
LEVEL 1, THE CENTRAL BUILDING
INNOVATION CAMPUS, SQUIRES WAY
NORTH WOLLONGONG NSW 2500
AUSTRALIA
T: +61 2 4249 1004
F: +61 2 4249 1000
www.slrconsulting.com

Shoalhaven City Council

FOR CONSTRUCTION

CLIENT: SHOALHAVEN CITY COUNCIL

PROJECT: LANDSLIDE REMEDIATION DESIGN OF VARIOUS SITES

DRAWING TITLE: TYPICAL DETAILS AND SPECIFICATIONS SHEET 1

A1	DO NOT SCALE THIS DRAWING IF IN DOUBT ASK	SCALE: 1:20	DRAWING NUMBER: 660.30255-G-2000	ISSUE: 1

H:\Projects-SLR\660-SrvWOL\660-WOL\660.30255.00000 Detailed Geotechnical Analysis and Desig\06 SLR Data\01 CAD\GIS\CAD\660.30255-G-2000.dwg

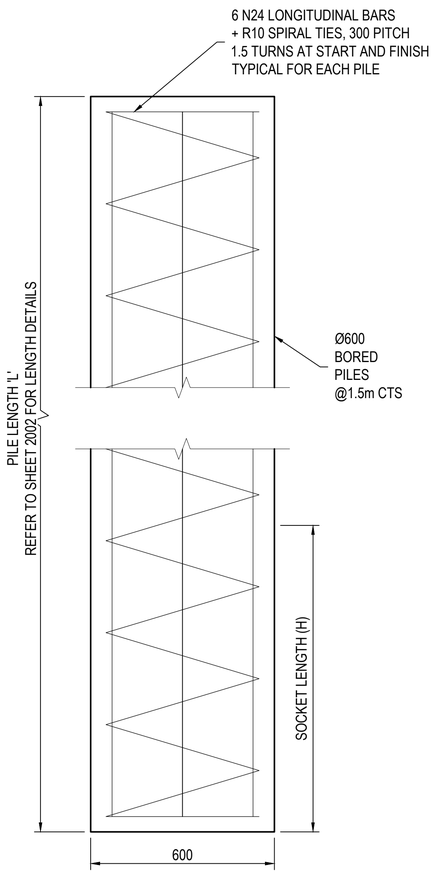

TYPICAL PILE DETAILS
SCALE 1:10

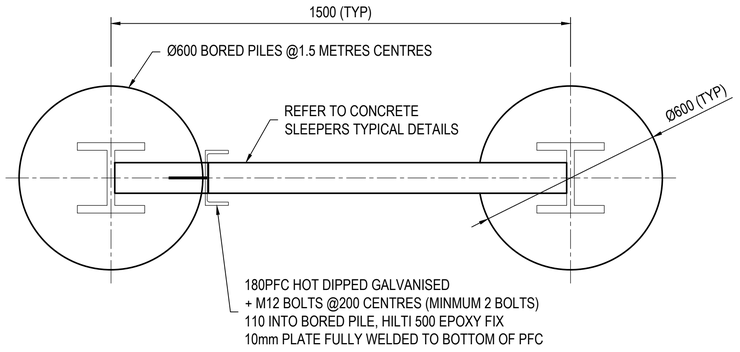

TYPICAL PILE AND SLEEPERS CONFIGURATION PLAN DETAIL
SCALE 1:10

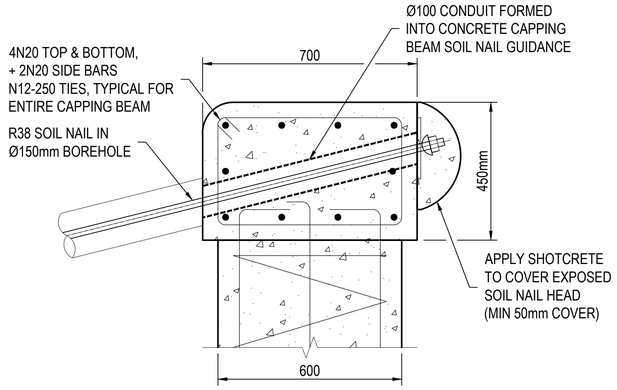

TYPICAL CAPPING BEAM WITH
SOIL NAIL DETAIL (750 WIDE)
SCALE 1:10

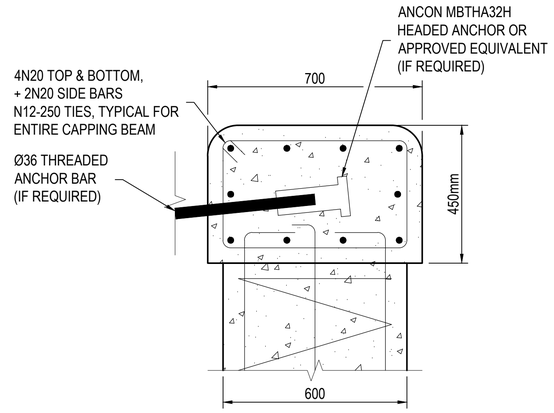

TYPICAL CAPPING BEAM WITH
ANCHOR DETAIL (750 WIDE)
SCALE 1:10

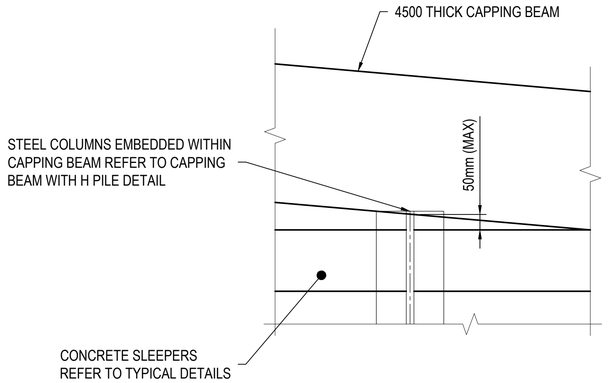

TYPICAL SLEEPER AND BEAM EMBEDMENT DETAIL
SCALE 1:10

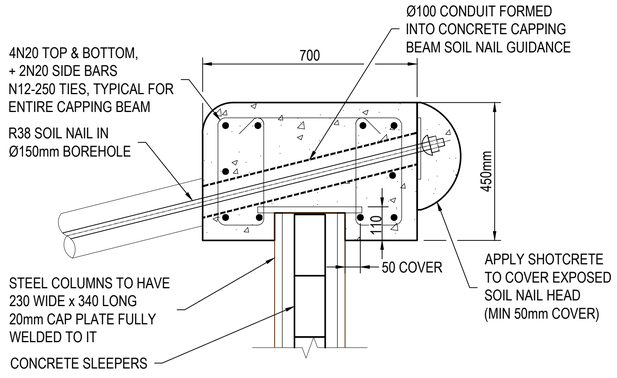

TYPICAL CAPPING BEAM WITH H PILE
AND SOIL NAIL DETAIL (700 WIDE)
SCALE 1:10

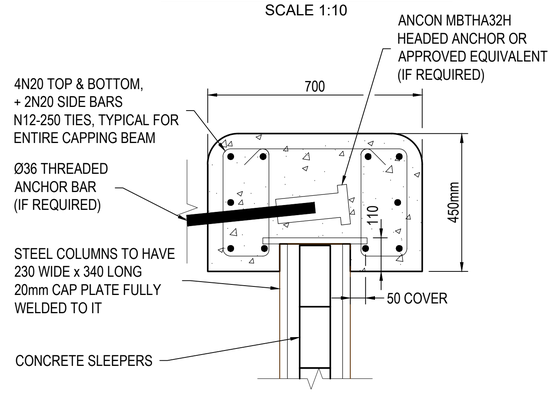

TYPICAL CAPPING BEAM WITH H PILE
AND ANCHOR DETAIL (700 WIDE)
SCALE 1:10

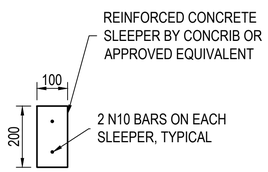

TYPICAL CONCRETE SLEEPER DETAILS
SCALE 1:10

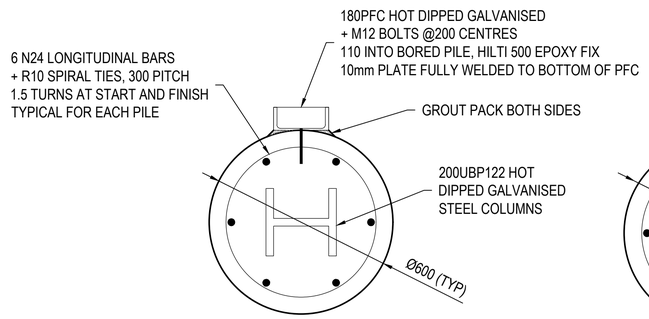

TYPICAL H PILE SECTION
SCALE 1:10

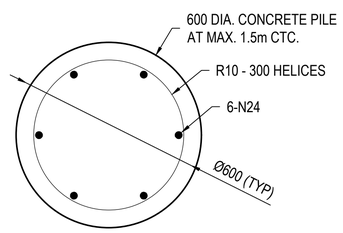

TYPICAL PILE SECTION
NTS

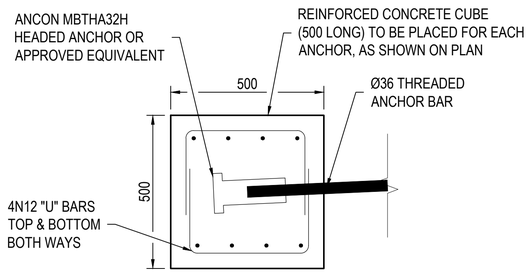

TYPICAL ANCHOR BLOCK SECTION
SCALE 1:10

0 100 200 300 400
MILLIMETRES
SCALE 1:10

REVISIONS			
1	24.02.2023	ISSUED FOR CONSTRUCTION	DT
	DATE	DESCRIPTION	

PLOT DATE 23-Feb-2023 9:37:41 PM

Responsible Principal Signature | Date

		DATE:
DRAWN:	WP/GL	20.10.2022
DESIGN:	MB/DT	19.10.2022
DRG. CHECK:	MB	24.10.2022
DES. CHECK:	DT	25.10.2022

SLR
LEVEL 1, THE CENTRAL BUILDING
INNOVATION CAMPUS, SQUIRES WAY
NORTH WOLLONGONG NSW 2500
AUSTRALIA
T: +61 2 4249 1004
F: +61 2 4249 1000
www.slrconsulting.com

Shoalhaven City Council

FOR CONSTRUCTION

CLIENT: SHOALHAVEN CITY COUNCIL

PROJECT: LANDSLIDE REMEDIATION DESIGN OF VARIOUS SITES

DRAWING TITLE: TYPICAL DETAILS AND SPECIFICATIONS SHEET 2

A1	DO NOT SCALE THIS DRAWING IF IN DOUBT ASK	SCALE: 1:10	DRAWING NUMBER: 660.30255-G-2001	ISSUE: 1

CONSULTANT PROJECT 660.30255 FULL SIZE ON ORIGINAL 0 10 20 40 60 80 100 A1

H:\Projects-SLR\660-SrvWOL\660-WOL\660.30255.00000 Detailed Geotechnical Analysis and Desig\06 SLR Data\01 CADGIS\CAD\660.30255-G-2000.dwg

CONCRETE PILE SCHEDULE

RECORD NUMBER	LOCATION	ESTIMATED LENGTH OF TREATMENT (m)	PILE Ø (m)	PILE SPACING (m)	PILE LENGTH 'L' (m)	SOCKET LENGTH 'H' (m)	SLEEPERS REQUIRED	TIE-BACK /ANCHOR REQUIRED	TRAFFIC BARRIER REQUIRED	PRE-EXCAVATION WIDTH - W (m)	PRE-EXCAVATION DEPTH - D (m)
DM00865	Abernathys Rd	20	0.6	1.5	8	2.0m into RES/EW	Yes (10m)	No	No	0 to 3	0 to 2.5
DM00548	Bunkers Hill Rd	90	0.6	1.5	10	2.5m into MW	Yes (87m)	No	Yes	0 to 5.5	0 to 2.5
DM00549	Bunkers Hill Rd	40	0.6	1.5	5.7	1.0m into MW	Yes (37m)	Yes	Yes	0 to 2.5	0 to 1.5
DM00869	Bunkers Hill Rd	55 (20m existing piles to be anchored) (35m new piles to be constructed and anchored)	0.6	1.5	6	2.0m into HW/MW	Yes (re-use existing within damaged piles) No (outside of damaged piles)	Yes	No	0 to 2.5	0 to 1.5
DM00870	Bunkers Hill Rd	42	0.6	1.5	6	1.5m into MW	No	Yes	No	2.5	0.3
2 SH00288	Burrier Rd	110	0.6	1.5	6	2.5m into RES/EW	Yes (107m)	No	Yes	0 to 2.5	0 to 1.5
SH00292	Burrier Rd	100	0.6	1.5	8.5	3.5m into HW or 2m into MW	No	Yes	Yes	0	0
DM00555	Foremans Rd	35	0.6	1.5	9	2.0m into MW	Yes (32m)	No	No	0 to 5.0	0 to 2.5
DM00805	Kangaroo Valley Rd	40	0.6	1.5	4	1.0m into EW	No	No	Yes	0	0
DM00533	Mount Scanzi Rd	10	0.6	1.5	5	2.0m into RES/EW	No	No	No	1.5	0.3
DM00757	Mount Scanzi Rd	17	0.6	1.5	6	2.0m into RES/EW	No	No	No	1.5	0.3
DM00864	Mount Scanzi Rd	25	0.6	1.5	7	2.0m into EW	No	No	No	1.5	0.3
NH00013	Mount Scanzi Rd	23	0.6	1.5	6	2.0m into RES/EW	No	No	No	1.5	0.3
DM00583	Upper Kangaroo River Rd	65	0.6	1.5	9	1.0m into MW	No	No	No	1.5	0.3
DM00828*	Upper Kangaroo River Rd	25	0.6	1.5	9	1.0m into MW/SW	Yes (22m)	No	No	0	0
DM00513	Wattamolla Rd	86	0.6	1.5	11	1.0m into MW/SW	Yes (77m)	No	No	0 to 8	0.6 to 1.2
SH00276	Wogamia Rd	60	0.6	1.5	8	1.0m into HW/MW	No	No	Yes	1.5	0.3
AQ00001	Upper Kangaroo River Rd	35	0.6	1.5	7	2.0m into EW/HW	No	No	No	0	0
DM00523	Suffolk Rd	40	0.6	1.5	7	1.0m into MW	No	No	No	0	0
DM00706	Browns Mountain Rd	25	0.6	1.8	2.5	2.5m into COL	No	No	No	1.3	0.5
2 DM00882	Foremans Rd	20	0.6	2	2.5	2.5 into COL	No	No	No	1.3	0.5
DM00282	Burrier Rd	700	0.6	1.5	8 to 10m	2.5m into HW or better	Yes - Some sections do not require treatment	No	Yes	0 to 0.5	0 to 1.0
DM00890	Burrier Rd	20	0.6	1.5	7	2.5m into HW or better	Yes	No	Yes	0 to 0.5	0 to 1.0

NOTE: * PILE CASING POSSIBLY REQUIRED ACROSS 10m SPAN (APPROX) FOR UPPER 2m OF PILE. TO BE CONFIRMED ON SITE.

ABBREVIATIONS:
RES = RESIDUAL
COL = COLLUVIUM
EW = EXTREMELY WEATHERED
HW = HIGHLY WEATHERED
MW = MODERATELY WEATHERED
SW = SLIGHTLY WEATHERED

REVISIONS			
2	10.03.2023	ISSUED FOR CONSTRUCTION	DT
1	24.02.2023	ISSUED FOR CONSTRUCTION	DT
	DATE	DESCRIPTION	

PLOT DATE 10-Mar-2023 10:02:26 AM

Responsible Principal Signature | Date

DRAWN:	WP/GL	DATE:	20.10.2022
DESIGN:	MB/DT	DATE:	19.10.2022
DRG. CHECK:	MB	DATE:	24.10.2022
DES. CHECK:	DT	DATE:	25.10.2022

SLR
LEVEL 1, THE CENTRAL BUILDING
INNOVATION CAMPUS, SQUIRES WAY
NORTH WOLLONGONG NSW 2500
AUSTRALIA
T: +61 2 4249 1004
F: +61 2 4249 1000
www.slrconsulting.com

Shoalhaven City Council

FOR CONSTRUCTION

CLIENT: SHOALHAVEN CITY COUNCIL
PROJECT: LANDSLIDE REMEDIATION DESIGN OF VARIOUS SITES
DRAWING TITLE: TYPICAL DETAILS AND SPECIFICATIONS SHEET 3

A1 | DO NOT SCALE THIS DRAWING IF IN DOUBT ASK | SCALE: N/A | DRAWING NUMBER: 660.30255-G-2002 | ISSUE: 2

CONSULTANT PROJECT 660.30255 FULL SIZE ON ORIGINAL A1

H:\Projects-SLR\660-SrvWOL\660-WOL\660.30255.00000 Detailed Geotechnical Analysis and Desig\06 SLR Data\01 CADGIS\CAD\660.30255-G-2000.dwg

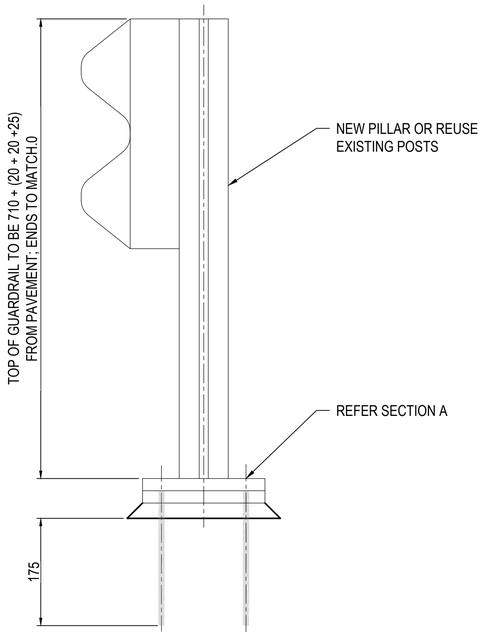

W-BEAM SECTIONAL DETAIL

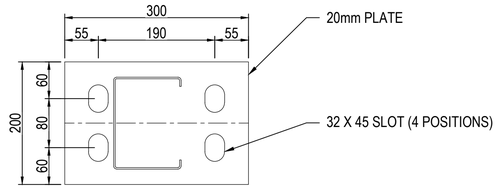

POST PLAN DETAIL

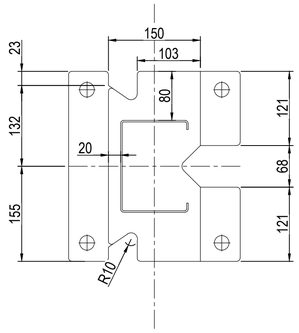

20mm SLIP BASE PLATE DETAIL

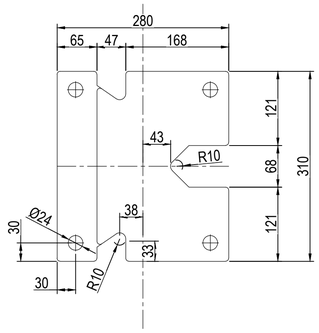

20mm BOTTOM PLATE DETAIL

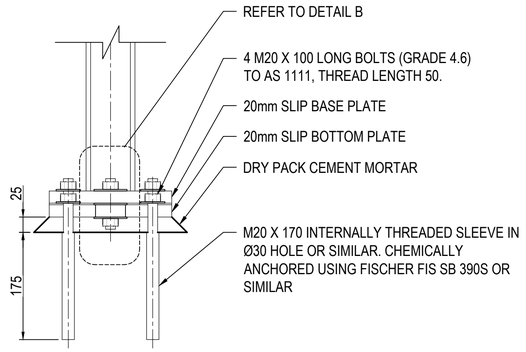

SECTION A
N.T.S

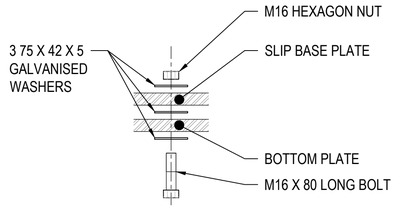

DETAIL B

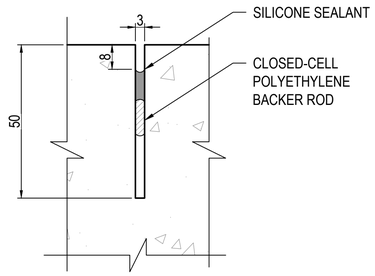

SAWCUT CONTRACTION JOINT DETAIL

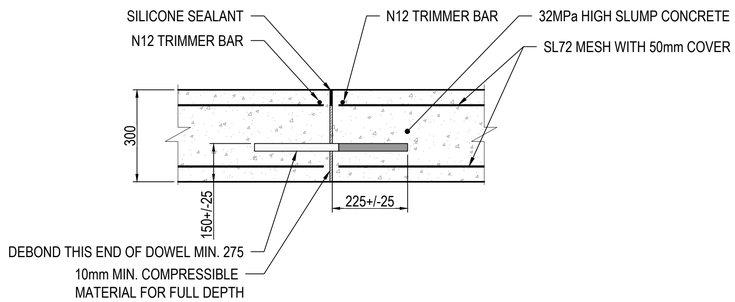

CONCRETE CAPPING SLAB CONSTRUCTION JOINT DETAIL

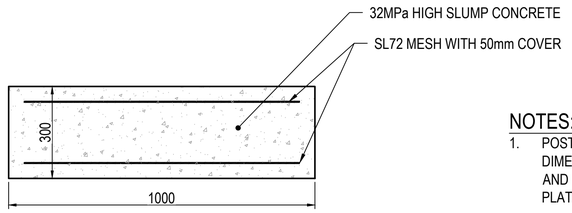

CONCRETE CAPPING SLAB DETAIL

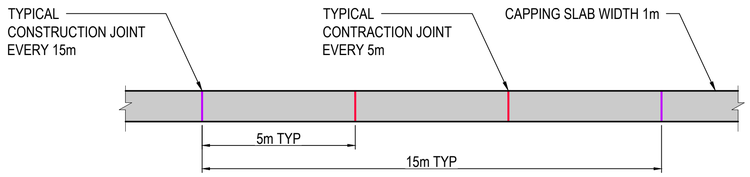

TYPICAL CONSTRUCTION JOINT FREQUENCY

NOTES:

1. POSTS ARE FROM 4.3 BMT PLATE GRADE HA300 STEEL TO AS 1594. CROSS-SECTION DIMENSIONS FOR POSTS ARE SHOWN ON TFNSW DRAWING R0710-01. STEEL BASE PLATE AND BOTTOM PLATE ARE TO AS 3678, GRADE HA250. POSTS TO BE WELDED TO BASE PLATE. POSTS AND PLATES HOT DIP GALVANISED TO AS 4680 AFTER FABRICATION.
2. HEXAGON BOLTS TO AS 1111 (GRADE 4.6). HEXAGON NUTS TO AS 1112 (GRADE 5). NUTS SHALL BE TAPPED TO SUIT GALVANSIED THREADS. BLACK STEEL WASHERS, LARGE SERIES TO AS 1237. BOLTS, NUTS AND WASHERS SHALL BE HOT DIP GALVANISED IN ACCORDANCE WITH REQUIREMENTS OF AS 1214.
3. SLIP BASE PLATE NUTS TO BE TIGHTENED TO 25Nm. BOLTS ATTACHING THE BOTTOM PLATE SHALL BE SNUG TIGHT TO AS 4100.
4. DIMENSIONS ARE SUBJECT TO MANUFACTURER'S TOLERANCES EXCEPT WHERE ALLOWABLE TOLERANCES ARE NOMINATED.

NOTE:
DETAILS SHOWN ON THIS PLAN ARE INSTRUCTIVE ONLY AND MAY BE SUPERSEDED BY TFNSW OR MANUFACTURER. REFER TO RELEVANT TFNSW FOR CURRENT DRAWINGS TO MANUFACTURERS SPECIFICATIONS FOR PRODUCT INSTRUCTION GUIDE (ARMCO OR APPROVED EQUIVALENT).

REVISIONS			
1	24.02.2023	ISSUED FOR CONSTRUCTION	DT
	DATE	DESCRIPTION	

PLOT DATE 23-Feb-2023 9:38:01 PM

Responsible Principal Signature | Date

DRAWN:	WP/GL	DATE:	20.10.2022
DESIGN:	MB/DT	DATE:	19.10.2022
DRG. CHECK:	MB	DATE:	24.10.2022
DES. CHECK:	DT	DATE:	25.10.2022

SLR
LEVEL 1, THE CENTRAL BUILDING
INNOVATION CAMPUS, SQUIRES WAY
NORTH WOLLONGONG NSW 2500
AUSTRALIA
T: +61 2 4249 1004
F: +61 2 4249 1000
www.slrconsulting.com

Shoalhaven City Council

FOR CONSTRUCTION

CLIENT: SHOALHAVEN CITY COUNCIL

PROJECT: LANDSLIDE REMEDIATION DESIGN OF VARIOUS SITES

DRAWING TITLE: TYPICAL DETAILS AND SPECIFICATIONS SHEET 4

A1	DO NOT SCALE THIS DRAWING IF IN DOUBT ASK	SCALE: N/A	DRAWING NUMBER: 660.30255-G-2003	ISSUE: 1

CONSULTANT PROJECT 660.30255

FULL SIZE ON ORIGINAL 0 10 20 40 60 80 100 A1

H:\Projects-SLR\660-SrvWOL\660-WOL\660.30255.00000 Detailed Geotechnical Analysis and Desig\06 SLR Data\01 CADGIS\CAD\660.30255-G-2000.dwg

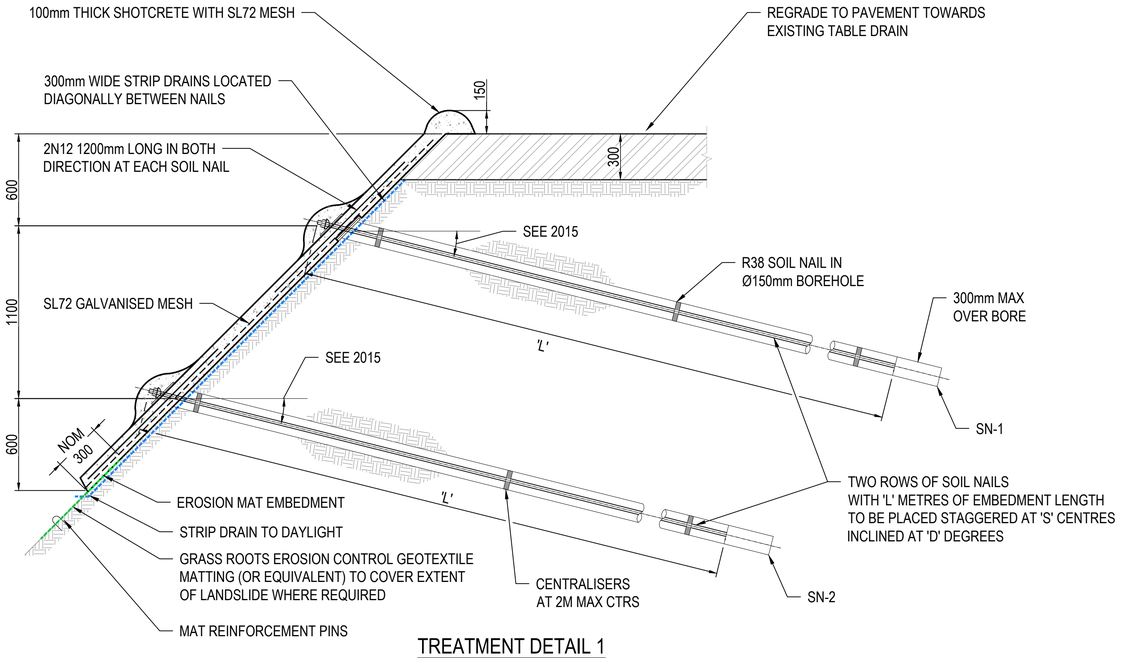

TREATMENT DETAIL 1

SCALE1:20

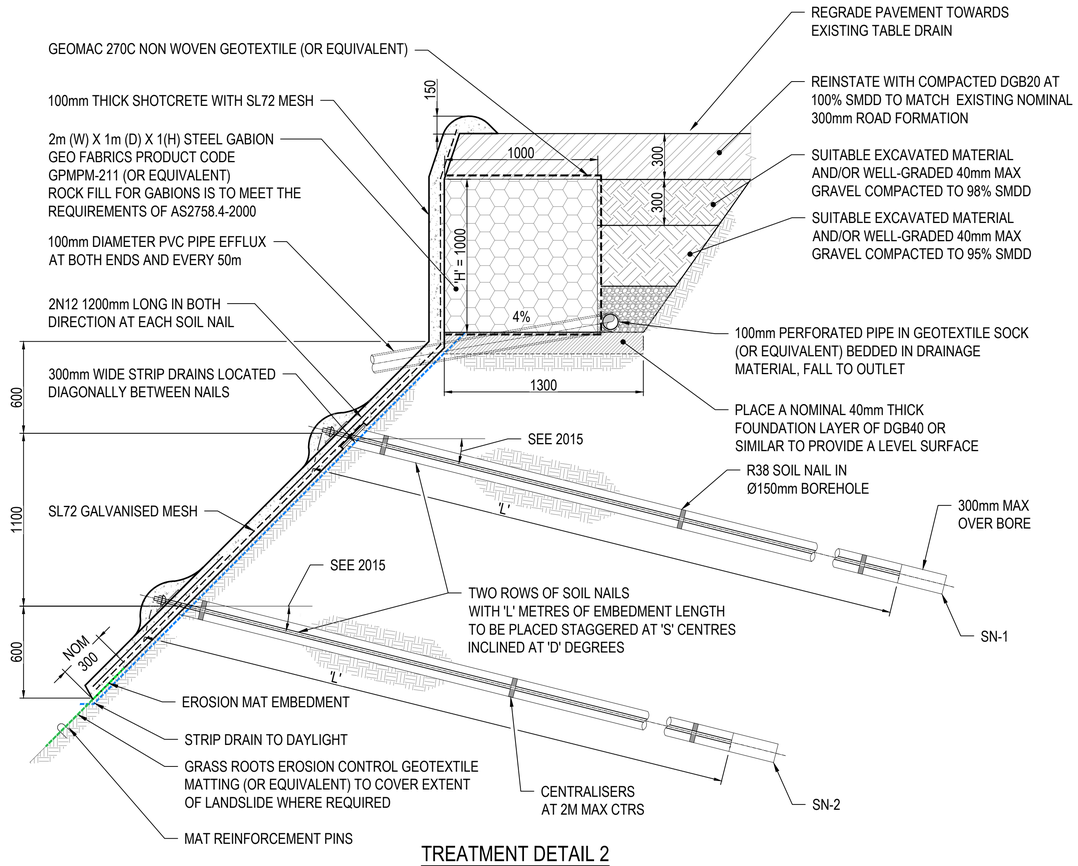

TREATMENT DETAIL 2

SCALE1:20

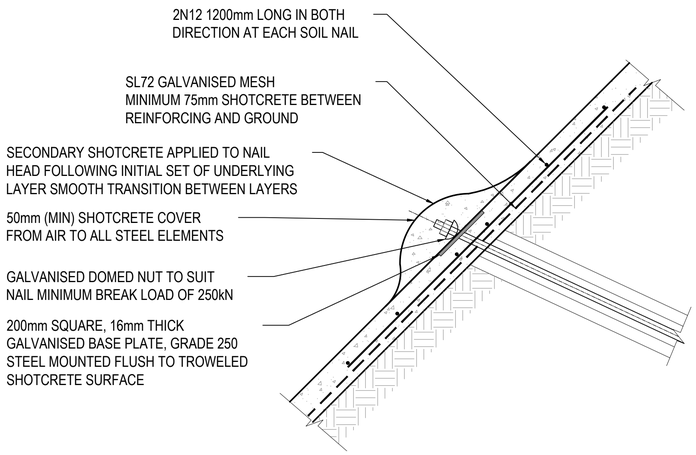

SOIL NAIL DETAIL

SCALE1:10

CONSULTANT PROJECT 660.30255 FULL SIZE ON ORIGINAL 0 10 20 40 60 80 100 A1

REVISIONS			
1	24.02.2023	ISSUED FOR CONSTRUCTION	DT
	DATE	DESCRIPTION	

PLOT DATE 23-Feb-2023 9:38:11 PM

THIS DRAWING IS NOT TO BE USED FOR CONSTRUCTION UNLESS ENDORSED BELOW

Responsible Principal Signature | Date

		DATE:
DRAWN:	WP/GL	20.10.2022
DESIGN:	MB/DT	19.10.2022
DRG. CHECK:	MB	24.10.2022
DES. CHECK:	DT	25.10.2022

SLR
LEVEL 1, THE CENTRAL BUILDING
INNOVATION CAMPUS, SQUIRES WAY
NORTH WOLLONGONG NSW 2500
AUSTRALIA
T: +61 2 4249 1004
F: +61 2 4249 1000
www.slrconsulting.com

Shoalhaven City Council

FOR CONSTRUCTION

CLIENT: SHOALHAVEN CITY COUNCIL

PROJECT: LANDSLIDE REMEDIATION DESIGN OF VARIOUS SITES

DRAWING TITLE: TYPICAL DETAILS AND SPECIFICATIONS SHEET 5

A1 | DO NOT SCALE THIS DRAWING IF IN DOUBT ASK | SCALE: 1:20 | DRAWING NUMBER: 660.30255-G-2010 | ISSUE: 1

H:\Projects-SLR\660-SrvWOL\660-WOL\660.30255.00000 Detailed Geotechnical Analysis and Desig\06 SLR Data\01 CAD\GIS\CAD\660.30255-G-2000.dwg

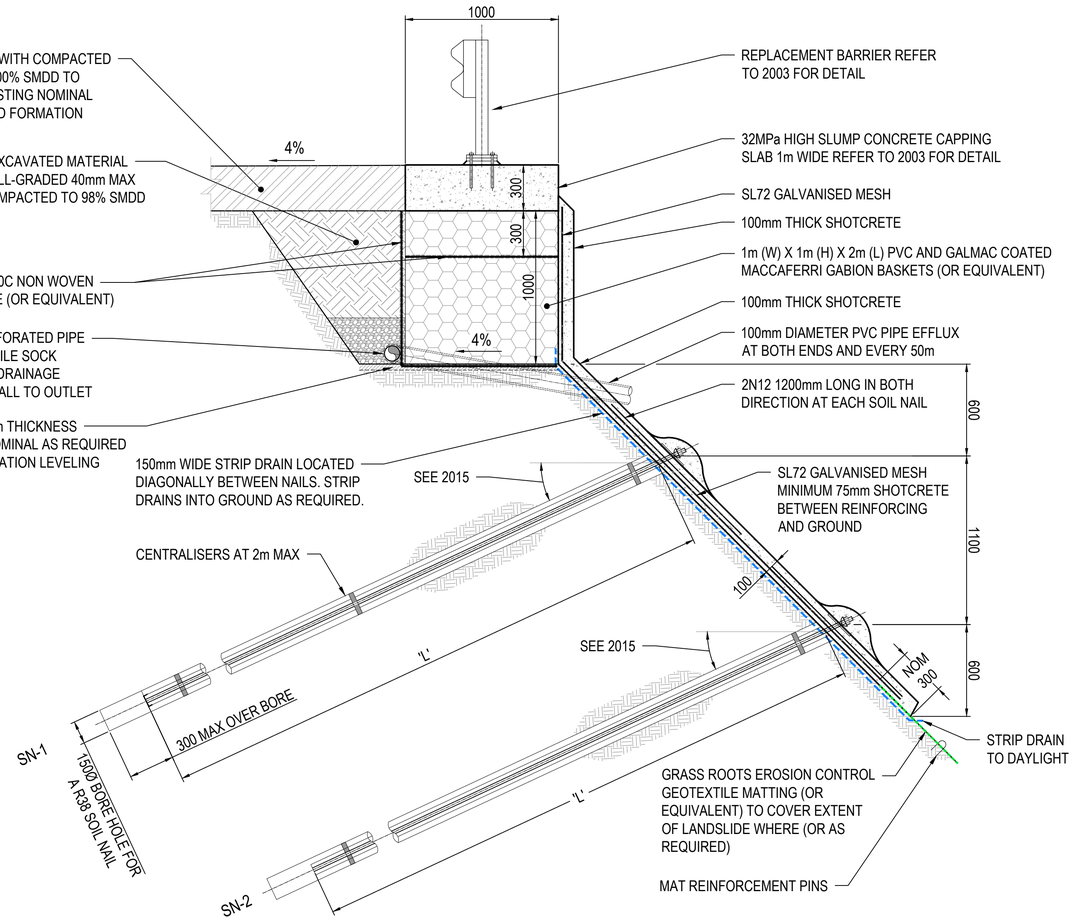

TREATMENT DETAIL 3

SCALE1:20

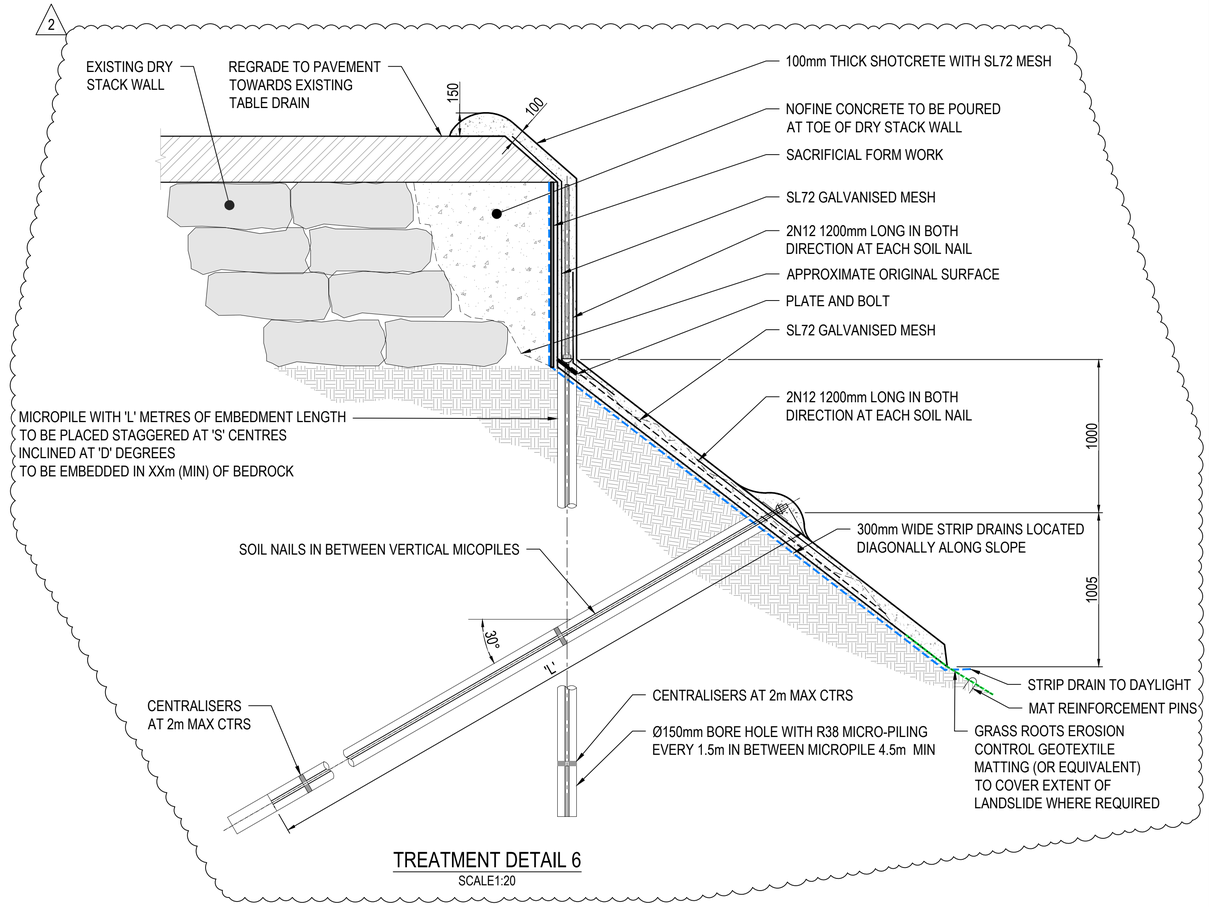

TREATMENT DETAIL 6

SCALE1:20

0 200 400 600 800 MILLIMETRES

SCALE 1:20

CONSULTANT PROJECT 660.30255 FULL SIZE ON ORIGINAL A1

REVISIONS			
2	10.03.2023	ISSUED FOR CONSTRUCTION	DT
1	24.02.2023	ISSUED FOR CONSTRUCTION	DT
	DATE	DESCRIPTION	

PLOT DATE 10-Mar-2023 9:36:57 AM

Responsible Principal Signature | Date

DRAWN:	WP/GL	DATE:	20.10.2022
DESIGN:	MB/DT	DATE:	19.10.2022
DRG. CHECK:	MB	DATE:	24.10.2022
DES. CHECK:	DT	DATE:	25.10.2022

SLR
LEVEL 1, THE CENTRAL BUILDING
INNOVATION CAMPUS, SQUIRES WAY
NORTH WOLLONGONG NSW 2500
AUSTRALIA
T: +61 2 4249 1004
F: +61 2 4249 1000
www.slrconsulting.com

Shoalhaven City Council

FOR CONSTRUCTION

CLIENT: SHOALHAVEN CITY COUNCIL

PROJECT: LANDSLIDE REMEDIATION DESIGN OF VARIOUS SITES

DRAWING TITLE: TYPICAL DETAILS AND SPECIFICATIONS SHEET 6

A1 | DO NOT SCALE THIS DRAWING IF IN DOUBT ASK | SCALE: AS SHOWN | DRAWING NUMBER: 660.30255-G-2011 | ISSUE: 2

H:\Projects-SLR\660-SrvWOL\660-WOL\660.30255.00000 Detailed Geotechnical Analysis and Desig\06 SLR Data\01 CADGIS\CAD\660.30255-G-2000.dwg

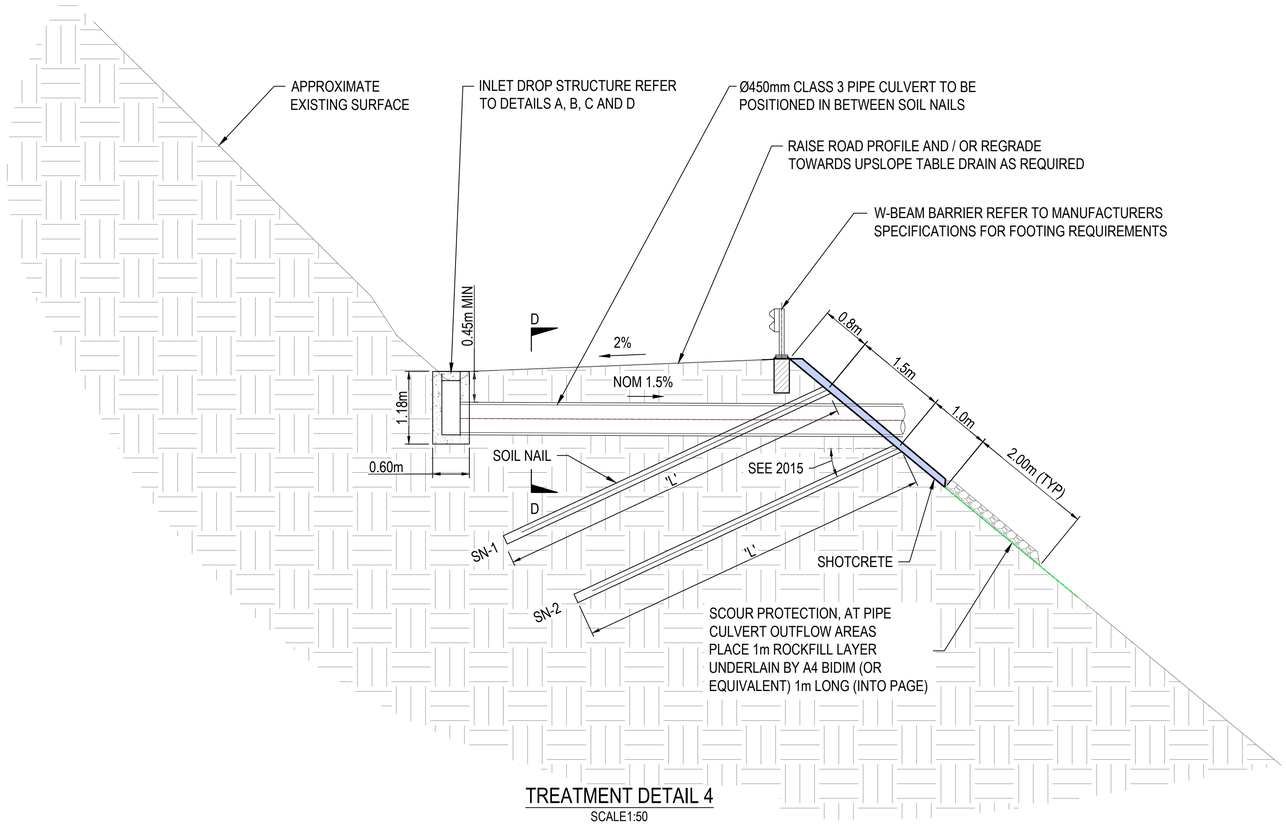

TREATMENT DETAIL 4
SCALE1:50

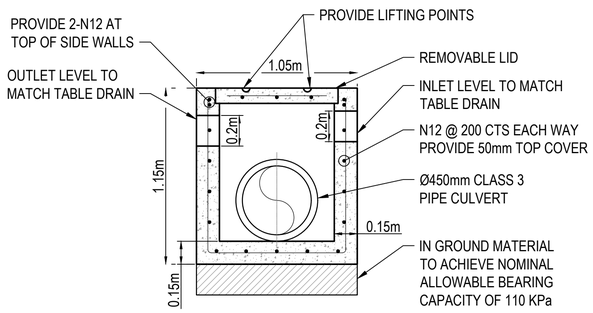

INLET DROP STRUCTURE SIDE DETAIL (A)
(FORMED IN-SITU)
SCALE 1:20

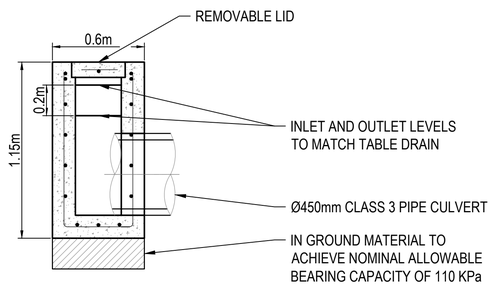

INLET DROP STRUCTURE END DETAIL (B)
(FORMED IN-SITU)
SCALE 1:20

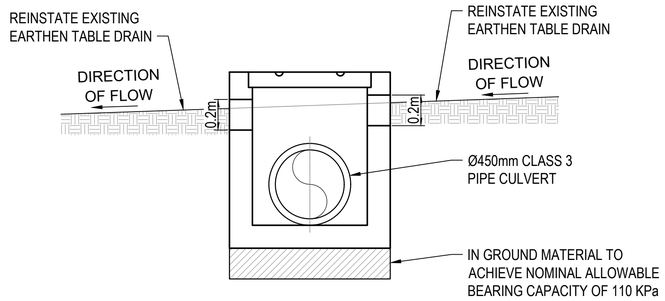

INLET DROP STRUCTURE AND TABLE DRAIN SCHEMATIC (C)
SCALE 1:20

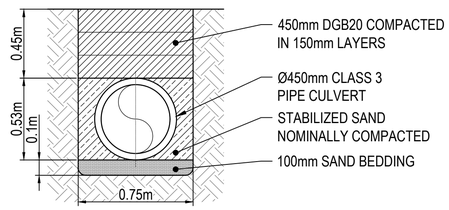

TRENCH DETAIL (D)
SCALE 1:20

NOTE:
DROP STRUCTURE AND CULVERT DIMENSIONS ARE INDICATIVE ONLY AND WILL NEED TO BE CONFIRMED ON SITE.

0 200 400 600 800 MILLIMETRES
SCALE 1:20

0 500 1000 1500 2000 MILLIMETRES
SCALE 1:50

1	24.02.2023	ISSUED FOR CONSTRUCTION	DT
	DATE	DESCRIPTION	

REVISIONS

PLOT DATE 23-Feb-2023 9:38:31 PM

THIS DRAWING IS THE PROPERTY OF SLR CONSULTING AUSTRALIA AND MUST NOT BE RETAINED, COPIED OR USED WITHOUT THE CONSENT OF THE COMPANY.

THIS DRAWING IS NOT TO BE USED FOR CONSTRUCTION UNLESS ENDORSED BELOW

Responsible Principal Signature | Date

DRAWN:	WP/GL	DATE:	20.10.2022
DESIGN:	MB/DT	DATE:	19.10.2022
DRG. CHECK:	MB	DATE:	24.10.2022
DES. CHECK:	DT	DATE:	25.10.2022

SLR
LEVEL 1, THE CENTRAL BUILDING
INNOVATION CAMPUS, SQUIRES WAY
NORTH WOLLONGONG NSW 2500
AUSTRALIA
T: +61 2 4249 1004
F: +61 2 4249 1000
www.slrconsulting.com

Shoalhaven City Council

FOR CONSTRUCTION

A1

DO NOT SCALE THIS DRAWING
IF IN DOUBT ASK

CLIENT: SHOALHAVEN CITY COUNCIL

PROJECT: LANDSLIDE REMEDIATION DESIGN OF VARIOUS SITES

DRAWING TITLE: TYPICAL DETAILS AND SPECIFICATIONS SHEET 7

SCALE: AS SHOWN

DRAWING NUMBER: 660.30255-G-2012

ISSUE: 1

CONSULTANT PROJECT 660.30255

FULL SIZE ON ORIGINAL 0 10 20 40 60 80 100 A1

H:\Projects-SLR\660-SrvWOL\660-WOL\660.30255.00000 Detailed Geotechnical Analysis and Desig\06 SLR Data\01 CAD\GIS\CAD\660.30255-G-2000.dwg

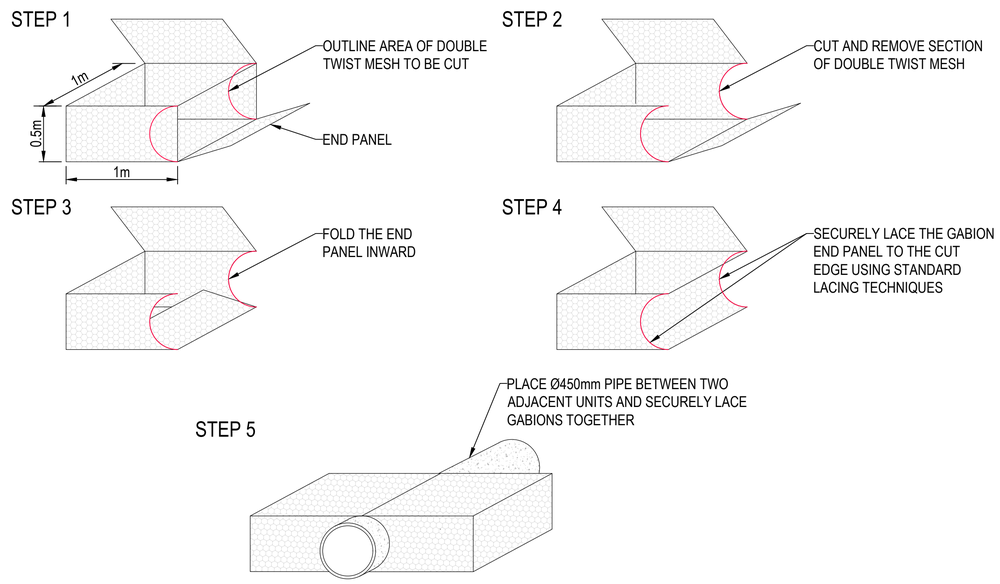

TYPICAL DETAIL SHOWING PIPES PLACED WITHIN GABION STRUCTURES

NOT TO SCALE

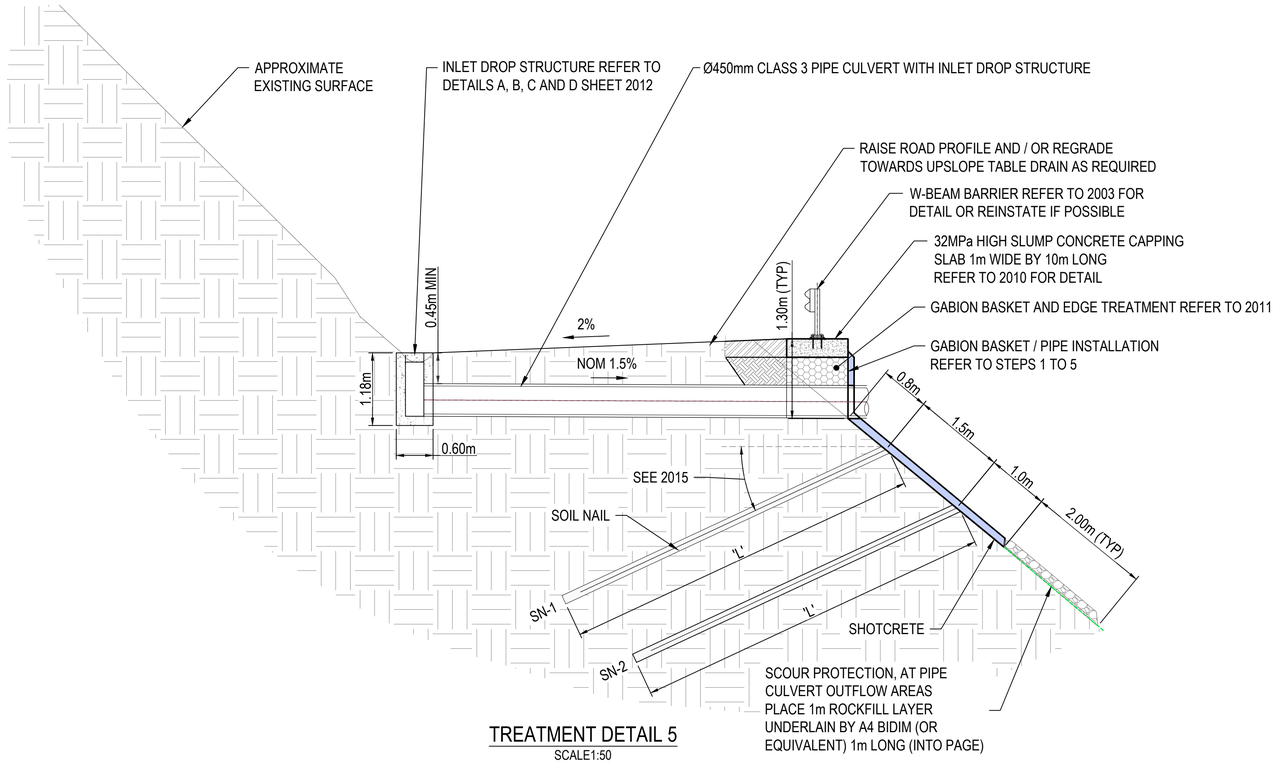

TREATMENT DETAIL 5

SCALE1:50

0 0 500 1000 1500 2000 MILLIMETRES

SCALE 1:50

CONSULTANT PROJECT 660.30255 FULL SIZE ON ORIGINAL 0 10 20 40 60 80 100 A1

REVISIONS				
1	24.02.2023	ISSUED FOR CONSTRUCTION	DT
	DATE	DESCRIPTION	

PLOT DATE 23-Feb-2023 9:38:41 PM

THIS DRAWING IS THE PROPERTY OF SLR CONSULTING AUSTRALIA AND MUST NOT BE RETAINED, COPIED OR USED WITHOUT THE CONSENT OF THE COMPANY.

THIS DRAWING IS NOT TO BE USED FOR CONSTRUCTION UNLESS ENDORSED BELOW

Responsible Principal Signature | Date

DRAWN:	WP/GL	DATE:	20.10.2022
DESIGN:	MB/DT	DATE:	19.10.2022
DRG. CHECK:	MB	DATE:	24.10.2022
DES. CHECK:	DT	DATE:	25.10.2022

SLR
LEVEL 1, THE CENTRAL BUILDING
INNOVATION CAMPUS, SQUIRES WAY
NORTH WOLLONGONG NSW 2500
AUSTRALIA
T: +61 2 4249 1004
F: +61 2 4249 1000
www.slrconsulting.com

Shoalhaven City Council

CLIENT: SHOALHAVEN CITY COUNCIL

PROJECT: LANDSLIDE REMEDIATION DEISGN OF VARIOUS SITES

DRAWING TITLE: TYPICAL DETAILS AND SPECIFICATIONS SHEET 8

FOR CONSTRUCTION | A1 | DO NOT SCALE THIS DRAWING **IF IN DOUBT ASK** | SCALE: 1:50 | DRAWING NUMBER: 660.30255-G-2013 | ISSUE: 1

H:\Projects-SLR\660-SrvWOL\660-WOL\660.30255.00000 Detailed Geotechnical Analysis and Desig\06 SLR Data\01 CADGIS\CAD\660.30255-G-2000.dwg

SOIL NAIL SCHEDULE

RECORD NUMBER	LOCATION	ESTIMATED LENGTH OF TREATMENT (m)	STACKS OF GABION BASKET OR MASS BLOCK	NUMBER OF SOIL NAIL ROWS	NAIL SIZE (mm)	SOIL NAIL HORIZONTAL SPACING 'S' (m)	SLOPE DISTANCE FROM ROAD SURFACE		SOIL NAIL LENGTH 'L' (m)	ULTIMATE LOAD (kN)	BOREHOLE DIAMETER (mm)	ANGLE FROM HORIZONTAL Ø (deg)	MINIMUM PLATE SIZE	SOCKET LENGTH (m)	TRAFFIC BARRIER REQUIRED
SH00290	Bamarang Rd	45	1	2	R38	1.5	SN-1	0.8	4.5	25	150	15	200 x 200 x 16	1.0m into EW	No
							SN-2	2.3	4.5	25	150	15	200 x 200 x 16	1.0m into EW	
		25	NO	2	R38	1.5	SN-1	At the toe of dry stack wall	5.5	25	150	90	200 x 200 x 16	1.0m into EW	No
							SN-2	1.5m from toe of dry stack wall	4.5	25	150	30	200 x 200 x 16	1.0m into EW	No
AC00088	Bunkers Hill Rd	20	0	2	R38	1.5	SN-1	0.8	4	25	150	15	200 x 200 x 16	4.0m into COL	No
							SN-2	2.3	4	25					
DM00610	Hughes Rd	20	1 (20m)	2	R38	1.5	SN-1	0.8	6	35	150	15	200 x 200 x 16	1.5m into RES	No
							SN-2	2.3	5.5	40				2.5m into RES	
DM00611	Hughes Rd	30	1 (20m) 0 (10m)	2	R38	1.5	SN-1	0.8	5.5	30	150	15	200 x 200 x 16	1.5m into RES	No
							SN-2	2.3	6	35				2.5m into RES	
DM00718	Mount Scanzi Rd	55	1 (18m) 0 (37m)	2	R38	1.5	SN-1	0.8	7	50	150	15	200 x 200 x 16	1.5m into EW	No
							SN-2	2.3							
DM00755	Mount Scanzi Rd	20	1 (20m)	2	R38	1.5	SN-1	0.8	3	20	150	15	200 x 200 x 16	3.0m into COL	No
							SN-2	2.3	2.5	15				2.5m into COL	
DM00863	Wattamolla Rd	25	0	2	R38	1.5	SN-1	0.8	4	25	150	15	200 x 200 x 16	4.0m into COL	No
							SN-2	2.3	4	30					
MT00008	Woodhill Mountain Rd	64	0	3	R38	1.5	SN-1	0.7	5.5	55	150	20	200 x 200 x 16	1.0m into RES	Yes
							SN-2	2.2		50				1.5m into RES	
							SN-3	3.7		45				2.0m into RES	
DM00899	Bamarang Rd	22	0	2	R38	1.5	SN-1	0.8	5.5	40	150	15	200 x 200 x 16	1.5m into RES/EW	No
							SN-2	2.3						3.5m into RES/EW	
DM00548	Bunkers Hill Rd	20	0	4	R38	2.5	SN-1	0.8	2.5	18	150	20	200 x 200 x 16	1.0m into RES/EW	Yes (pile section); No (soil nail section)
							SN-2	2.8	3	23					
							SN-3	4.8	3	23					
							SN-4	6.8	2.5	18					
NH00011	Upper Kangaroo River Rd	25	0	3	R38	1.5	SN-1	0.8	8.5	70	150	15	200 x 200 x 16	1.0m into RES/EW	No
							SN-2	2.3		65				2.0m into RES/EW	
							SN-3	3.8		55				3.0m into RES/EW	
DM00549	Bunkers Hill Rd	40	0	1	R38	10.0	SN-1	0.35	7	--	150	15	ANCON	1.5m into MW	Yes
DM00869	Bunkers Hill Rd	20	0	2	R38	1.5	SN-1	0.7	7	--	150	15	200 x 200 x 16	2.0m into HW/MW	No
							SN-2	2.2							
		35	0	1	R38	8.0	SN-1	0.35	7	--	150	15	ANCON	2.0m into HW/MW	
DM00870	Bunkers Hill Rd	42	0	1	R38	10.0	SN-1	0.35	7	--	150	15	ANCON	1.5m into MW	No
DM00808	Woodhill Mountain Rd	40	0	13	SEE 1260 to 1262 FOR DETAILS										No

LIST OF SITES REMOVED FROM TABLE

SH00282
DM00890
SH00292

NOTE:

REFER TO 2002 FOR ABBREVIATIONS DEFINITIONS

REVISIONS			
3	10.03.2023	ISSUED FOR CONSTRUCTION	DT
2	02.03.2023	ISSUED FOR CONSTRUCTION	DT
1	24.02.2023	ISSUED FOR CONSTRUCTION	DT
	DATE	DESCRIPTION	

PLOT DATE 10-Mar-2023 10:00:59 AM

Responsible Principal Signature | Date

DRAWN:	WP/GL	DATE:	20.10.2022
DESIGN:	MB/DT	DATE:	19.10.2022
DRG. CHECK:	MB	DATE:	24.10.2022
DES. CHECK:	DT	DATE:	25.10.2022

SLR
LEVEL 1, THE CENTRAL BUILDING
INNOVATION CAMPUS, SQUIRES WAY
NORTH WOLLONGONG NSW 2500
AUSTRALIA
T: +61 2 4249 1004
F: +61 2 4249 1000
www.slrconsulting.com

Shoalhaven City Council

FOR CONSTRUCTION

CLIENT: SHOALHAVEN CITY COUNCIL

PROJECT: LANDSLIDE REMEDIATION DESIGN OF VARIOUS SITES

DRAWING TITLE: TYPICAL DETAILS AND SPECIFICATIONS SHEET 9

A1 | DO NOT SCALE THIS DRAWING IF IN DOUBT ASK | SCALE: N/A | DRAWING NUMBER: 660.30255-G-2014 | ISSUE: 3

CONSULTANT PROJECT 660.30255 FULL SIZE ON ORIGINAL 0 10 20 40 60 80 100 A1

H:\Projects-SLR\660-SrvWOL\660-WOL\660.30255.00000 Detailed Geotechnical Analysis and Desig\06 SLR Data\01 CADGIS\CAD\660.30255-G-2000.dwg