Shoalhaven Water

Volume 2 – Drawings

Project: SPS 3 St Anns Street & SPS 2 Lyrebird Park Pump Station Upgrades

Reference No: 65509E

Shoalhaven Water

Volume 2 – Drawings

Separable Portion A: SPS3 St Anns Street

SHOALHAVEN WATER
ST ANNS PUMPING STATION UPGRADE



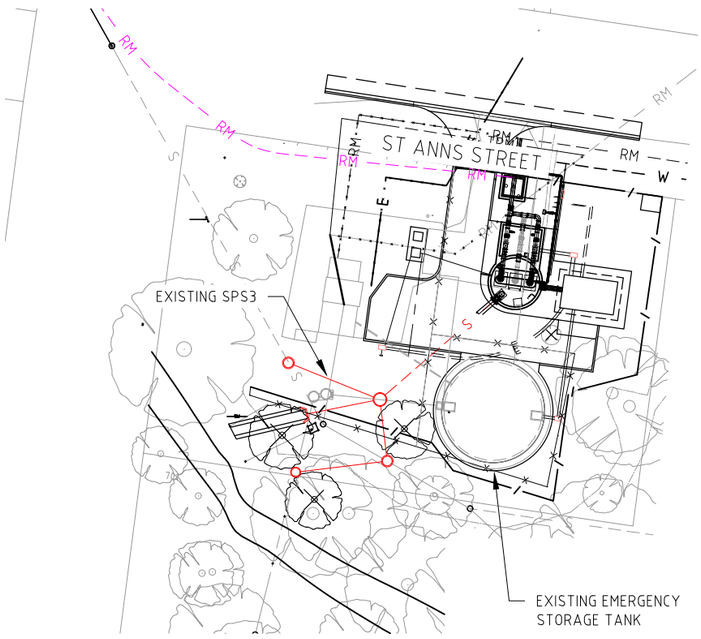

LOCALITY PLAN
NOT TO SCALE

DRAWING LIST

DRG No.	DRAWING TITLE
23-1426641-01	COVER SHEET, LOCALITY PLAN AND DRAWING LIST
23-1426641-02	STRUCTURAL NOTES - SHEET 1 OF 2
23-1426641-03	STRUCTURAL NOTES - SHEET 2 OF 2
23-1426641-04	SITE LAYOUT
23-1426641-05	PAVEMENT DETAILS AND SETOUT PLAN
23-1426641-06	LEVEL AND CAPACITIES INTERACTION DIAGRAM
23-1426641-07	SPS 3 GENERAL ARRANGEMENT WITH ROOF REMOVED
23-1426641-08	SPS 3 GENERAL ARRANGEMENT SECTIONAL ELEVATION
23-1426641-09	SPS 3 GENERAL ARRANGEMENT WITH ROOF SLAB
23-1426641-10	SPS 3 SCHEDULE OF PIPES AND FITTINGS - PLAN AND PUMP OUT DETAIL
23-1426641-11	SPS 3 SCHEDULE OF PIPES AND FITTINGS - SECTIONAL ELEVATION
23-1426641-12	GRAVITY SEWER AND OVERFLOW ARRANGEMENT - CONSTRUCTION
23-1426641-13	GRAVITY SEWER AND OVERFLOW ARRANGEMENT - CUT OVER TO NEW SPS3 AND RISING MAIN
23-1426641-14	OVERFLOW ARRANGEMENT AND BANK REGRADING PLAN
23-1426641-15	OVERFLOW ARRANGEMENT AND REGRADED BANK SECTIONS
23-1426641-17	FLOWMETER PIT AND PRESSURE TRANSDUCER DETAILS
23-1426641-18	SPS3 PROCESS AND INSTRUMENTATION DIAGRAM
23-1426641-19	WET WELL PENETRATION DETAIL
23-1426641-20	RPZ DEVICE TYPICAL LAYOUT
23-1426641-21	RISING MAIN LIMIT OF WORKS CONNECTION DETAIL
23-1426641-22	PIPE BRACKET AND LEVEL SENSOR DETAILS
23-1426641-23	WET WELL AND VALVE CHAMBER REINFORCEMENT DETAILS - SHEET 1 OF 2
23-1426641-24	WET WELL AND VALVE CHAMBER REINFORCEMENT DETAILS - SHEET 2 OF 2
23-1426641-25	PILE REINFORCEMENT DETAILS
23-1426641-26	WET WELL ROOF SLAB REINFORCEMENT DETAILS
23-1426641-27	STRUCTURAL DETAILS
23-1426641-04-700	SWITCHROOM BUILDING - FLOOR PLAN AND ROOF PLAN
23-1426641-04-701	SWITCHROOM BUILDING - ELEVATIONS AND SECTIONS
23-1426641-04-702	SWITCHROOM BUILDING - SECTION DETAILS
23-1426641-04-703	SWITCHROOM BUILDING - OPENING SCHEDULE
23-1426641-04-704	SWITCHROOM BUILDING - STRUCTURAL NOTES SHEET 1
23-1426641-04-705	SWITCHROOM BUILDING - STRUCTURAL NOTES SHEET 2
23-1426641-04-706	SWITCHROOM BUILDING - FOUNDATION, FRAMING PLANS, ELEVATION AND NOTES
23-1426641-04-707	SWITCHROOM BUILDING - SECTION AND DETAILS

No.	REVISION DETAILS	DWN	DATE
0	ISSUED FOR TENDER	RK	16.04.21

CONSULTANT DETAILS:
GHD
2/57 Graham Street
Nowra NSW 2541
T 61 2 4424 4900 F 61 2 4424 4999
www.ghd.com

CONSULT. REFERENCE No.
23-14266-41-01

Shoalhaven Water
A Group of Shoalhaven City Council

		DATE:	COMPANY:
DESIGNED:	ET	30.07.14	GHD
DRAWN:	JL	30.07.14	GHD
CHECKED:	MS	16.04.21	GHD
APPROVED:	CS	16.04.21	GHD

TITLE:
SHOALHAVEN WATER
ST ANNS PUMPING STATION UPGRADE

COVER SHEET, LOCALITY PLAN AND DRAWING LIST

SIZE:	SCALE:	INDEX No.	DRAWING No.	SHEET	REV No.
A3	NTS		23-1426641-01		0

Plot Date: 16/04/21 - 11:58 Cad File: N:\AU\Wollongong\Projects\23\12540351\CADD\Drawings\St Anns\23-1426641-01.dwg

GENERAL

G1. READ THESE NOTES IN CONJUNCTION WITH OTHER ENGINEERING DRAWINGS AND SPECIFICATIONS, AND WITH SUCH OTHER WRITTEN INSTRUCTIONS ISSUED. IN CASE OF DISCREPANCY, PRECEDENCE IS GIVEN TO DRAWINGS, THEN NOTES, THEN SPECIFICATION.

G2. CARRY OUT WORK IN A SAFE MANNER IN ACCORDANCE WITH APPLICABLE LEGISLATION, STATUTORY REGULATIONS, BY-LAWS OR RULES. CONTRACTOR IS RESPONSIBLE FOR OCCUPATIONAL HEALTH AND SAFETY OF SITE PERSONNEL AND GENERAL PUBLIC IN ACCORDANCE WITH WORK HEALTH AND SAFETY ACT 2010, LEGISLATIVE REQUIREMENTS, ASSOCIATED REGULATIONS AND CODES OF PRACTICE, INDUSTRIAL AGREEMENTS AND ACCEPTED INDUSTRY PRACTICE.

G3. REFER DISCREPANCIES TO SUPERINTENDENT BEFORE PROCEEDING WITH WORK.

G4. NOMINATION OF PROPRIETARY ITEMS DOES NOT INDICATE EXCLUSIVE PREFERENCE, BUT INDICATES REQUIRED PROPERTIES OF ITEM. SIMILAR ALTERNATIVES HAVING REQUIRED PROPERTIES MAY BE OFFERED FOR APPROVAL. APPROVAL DOES NOT AUTHORISE A VARIATION TO THE CONTRACT. INSTALL PROPRIETARY ITEMS IN ACCORDANCE WITH MANUFACTURER'S REQUIREMENTS AND RECOMMENDATIONS.

G5. OBTAIN NECESSARY PERMITS AND APPROVALS FROM RELEVANT AUTHORITIES BEFORE COMMENCING WORK ON SITE. NOTIFY RELEVANT SERVICE AUTHORITIES BEFORE COMMENCING WORK ON SITE.

G6. GIVE TWO WORKING DAYS (48 HOURS) NOTICE SO THAT INSPECTION MAY BE MADE OF CRITICAL STAGES OF WORK.

G7. INSPECTIONS UNDERTAKEN BY SUPERINTENDENT OR OTHERS DO NOT RELIEVE CONTRACTOR OF RESPONSIBILITY FOR COMPLIANCE WITH DRAWINGS AND SPECIFICATIONS.

G8. DO NOT OBTAIN DIMENSIONS BY SCALING FROM DRAWINGS.

G9. DIMENSIONS ARE IN MILLIMETRES, LEVELS ARE IN METRES UNO, CHAINAGES ARE IN METRES UNO.

G10. DATUM FOR LEVELS IS AHD (AUSTRALIAN HEIGHT DATUM).

G11. HAVE SURVEY AND SETTING OUT UNDERTAKEN BY A REGISTERED SURVEYOR.

G12. VERIFY ON SITE SETTING OUT DIMENSIONS AND EXISTING MEMBER SIZES SHOWN ON DRAWINGS BEFORE SHOP DRAWINGS, CONSTRUCTION AND FABRICATION IS COMMENCED. EXISTING STRUCTURES SHOWN ON DRAWINGS ARE IN APPROXIMATE LOCATIONS ONLY.

G13. TAKE CARE OF HAZARDS ASSOCIATED WITH BURIED, CONCEALED OR OVERHEAD SERVICES. TAKE PRECAUTIONS UNDERTAKE EXPLORATION TO ESTABLISH LOCATION OF AND PROTECT EXISTING SERVICES AT SITE. SERVICES SHOWN ON DRAWINGS ARE IN APPROXIMATE LOCATIONS ONLY. SERVICES OTHER THAN THOSE SHOWN MAY EXIST ON SITE. MARK LOCATIONS OF SERVICES CLEARLY ON SITE, AND ON AS-BUILT DRAWINGS. HAND EXCAVATE WITHIN ONE METRE OF IN-GROUND SERVICES.

G14. DISPOSE OF SURPLUS MATERIAL OFF SITE IN ACCORDANCE WITH LOCAL AUTHORITY WASTE REGULATIONS.

G15. IMPLEMENT SOIL AND WATER MANAGEMENT PROCEDURES TO AVOID EROSION, CONTAMINATION AND SEDIMENTATION OF SITE, SURROUNDING AREAS AND DRAINAGE SYSTEMS.

G16. WORKMANSHIP AND MATERIALS TO COMPLY WITH AUSTRALIAN STANDARDS, BUILDING CODE OF AUSTRALIA (BCA) AND BY-LAWS AND ORDINANCES OF RELEVANT BUILDING AUTHORITIES. ALL STANDARDS REFERRED TO ARE THOSE CURRENT (AS AMENDED) AT COMMENCEMENT OF CONTRACT.

G17. PROVIDE FOR TEMPORARY SUPPORT OF ADJOINING ELEMENTS DURING CONSTRUCTION.

G18. MAKE GOOD ANY DAMAGE TO EXISTING ELEMENTS AT COMPLETION OF WORKS.

G19. WHERE NEW WORK ABUTS EXISTING, PROVIDE SMOOTH TRANSITION FREE OF ABRUPT CHANGES.

G20. HAVE TESTING PERFORMED BY AN INDEPENDENT NATA (NATIONAL ASSOCIATION OF TESTING AUTHORITIES) ACCREDITED AUTHORITY, AND PROVIDE TEST REPORTS TO SUPERINTENDENT.

G21. SEPARATE METALS FROM INCOMPATIBLE MATERIALS (eg STAINLESS STEEL, GALVANIZED STEEL, UNGALVANIZED STEEL AND TREATED TIMBER etc) BY CONCEALED LAYERS OF SUITABLE INERT MATERIALS OF SUITABLE THICKNESSES. USE PLASTIC SLEEVES AND WASHERS FOR BOLTS, etc.

G22. KEEP ON SITE A COMPLETE SET OF CONTRACT DOCUMENTS (INCLUDING DRAWINGS AND SPECIFICATIONS) AND SITE INSTRUCTIONS.

DESIGN ASSUMPTIONS

G23. DESIGN LIFE = 50 YEARS.

G24. LIVE LOAD ON ROOF = 5 kPa
SURCHARGE LOAD ON WALL OF TANK = 5 kPa
1 IN 100 YEAR FLOOD LEVEL = 18.0m AHD

G25. SOIL PROPERTIES :
DENSITY = 18 kN/m3
COEFFICIENT OF EARTH PRESSURE AT REST = 0.5

TEMPORARY WORKS

G26. THESE DRAWINGS DO NOT DETAIL TEMPORARY WORKS. CONSTRUCTION METHODS AND TEMPORARY WORKS ARE RESPONSIBILITY OF THE CONTRACTOR.

G27. PROVIDE SCAFFOLDING, BARRIERS, FALL RESTRAINT, HAND-MID RAILS AND TOE BOARDS FOR WORK AT HEIGHT. ERECT ACCESS STAIRS AT EARLIEST OPPORTUNITY TO REDUCE OPEN SHAFT HAZARDS AND FACILITATE ACCESS. MAINTAIN SAFETY MESH AND BARRIERS TO ALL OPENINGS AND ELEVATED EDGES.

G28. MAINTAIN STRUCTURE IN A STABLE CONDITION DURING CONSTRUCTION AND PROVIDE TEMPORARY BRACING AND/OR SUPPORT AS REQUIRED.

FOUNDATIONS AND FOOTINGS

R1. REFER TO GEOTECHNICAL INVESTIGATION REPORT REGARDING FOUNDATION.

R2. FOUNDATIONS FOR WET WELL AND VALVE CHAMBER PILES ARE EXPECTED TO BE FOUNDED ON CLASS V SANDSTONE WITH AN ALLOWABLE BEARING CAPACITY OF 1000 kPa MINIMUM.FOUNDATION TO BE INSPECTED AND APPROVED BY AN EXPERIENCED GEOTECHNICAL ENGINEER BEFORE PLACING BLINDING CONCRETE.

R3. ENSURE EXCAVATIONS ARE STABLE AND PROTECT PROPERTY AND SERVICES FROM ADVERSE EFFECTS OF GROUND WORKS. PROVIDE TEMPORARY WORKS AS REQUIRED. PROVIDE SHORING CERTIFIED BY SUITABLY QUALIFIED STRUCTURAL ENGINEER TO ALL DEEP EXCAVATIONS WHERE REQUIRED.

R4. USE SUITABLE CONSTRUCTION TECHNIQUES AND EQUIPMENT FOR BACKFILLING ADJACENT TO STRUCTURES TO PREVENT OVERSTRESS AND DAMAGE. BACKFILL EVENLY TO AVOID DIFFERENTIAL SOIL PRESSURES ON STRUCTURES. BACKFILL AGAINST STRUCTURES ONLY AFTER SPECIFIED CONCRETE STRENGTH IS ACHIEVED, AND PERMANENT SUPPORT INSTALLED WHERE APPLICABLE.

CONCRETE

CONCRETE MIX

C1. WORKMANSHIP AND MATERIALS TO COMPLY WITH AS3600, AS2870, AS3610, AS1379, AS1478, AS3582, AS5100.5 AND AS3972. FOR LIQUID RETAINING STRUCTURES ALSO COMPLY WITH AS3735.

C2. WET CONCRETE TO BE UNIFORM, HOMOGENEOUS, COHESIVE AND ABLE TO WORK READILY INTO CORNERS AND AROUND REINFORCEMENT COMPLETELY FILLING FORMWORK WITHOUT SEGREGATION, EXCESS FREE WATER ON SURFACE, LOSS OF MATERIAL OR CONTAMINATION.
CONCRETE TO HAVE GOOD DIMENSIONAL STABILITY AND ABLE TO RESIST PLASTIC SETTLEMENT CRACKING, THERMAL CRACKING AND SHRINKAGE CRACKING.

C3. FINISHED CONCRETE TO BE A DURABLE, DENSE, HOMOGENEOUS MASS COMPLETELY FILLING FORMWORK, EMBEDDING REINFORCEMENT AND TENDONS, AND FREE OF STONE POCKETS, OF UNIFORM COLOUR AND TEXTURE, WITH LOW PERMEABILITY AND ADEQUATE BUT NOT EXCESSIVE STRENGTH FOR GRADE.

C4. UNO MINIMUM QUALITY OF CONCRETE ELEMENTS TO BE AS FOLLOWS:

STRUCTURAL ELEMENT	WET WELL & VALVE PIT	BLINDING & MASS CONCRETE
STRENGTH GRADE (MPa)	S40	N15
MINIMUM CHARACTERISTIC STRENGTH AT 28 DAYS (MPa)	40	15
MAX. 56 DAY DRYING SHRINKAGE	600 x 10^{-6}	-

A MINIMUM OF THREE WEEKS PRIOR TO COMMENCEMENT OF STRUCTURAL CONCRETE WORK, THE CONTRACTOR SHALL SUBMIT DETAILS OF CONCRETE MIX, TEST RESULTS CONDUCTED BY A CERTIFICATION BODY TO THE SUPERINTENDENT FOR APPROVAL.

C5. SUPPLEMENTARY CEMENTITIOUS MATERIALS INCLUDE SILICA FUME, FLY ASH, AND GROUND GRANULATED BLAST FURNACE SLAG (GGBFS OR SLAG).

C6. ADMIXTURES TO COMPLY WITH AS1478. ADMIXTURES MUST NOT REDUCE STRENGTH OF CONCRETE BELOW SPECIFIED VALUE. USE ADMIXTURES IN ACCORDANCE WITH MANUFACTURER'S RECOMMENDATIONS. CONCRETE ADDITIVES SHALL NOT ENHANCE CORROSION OF REINFORCEMENT, NOR BE DETRIMENTAL TO CONCRETE OR STEEL DURING EXPECTED LIFE OF STRUCTURE. DO NOT USE CHEMICAL ADMIXTURES OR OTHER MATERIALS WITHOUT SUPERINTENDENT'S WRITTEN APPROVAL.

C7. S40 GRADE CONCRETE IS REQUIRED TO HAVE HIGH DURABILITY.
PROVIDE CONCRETE WITH:
- AN AVERAGE COMPRESSIVE STRENGTH AT COMPLETION OF CURING NOT LESS THAN 75% OF SPECIFIED f'c.
- A TOTAL REACTIVE ALKALI CONTENT NOT GREATER THAN 3.0 kg/m^3 Na_2O (EQUIVALENT).
- PLACE CONCRETE IN LAYERS LESS THAN 300 mm THICK AND VIBRATE EACH LAYER BEFORE PLACING NEXT.

C8. S40 GRADE CONCRETE REQUIREMENTS:
- DO NOT USE METAL INSERTS WITHIN COVER CONCRETE INCLUDING METAL BAR CHAIRS.
- DO NOT ALLOW CONCRETE TO FALL VERTICALLY WHEN PLACING, OR TO ENTRAP AIR IN ANY OTHER WAY.
- PREVENT EVAPORATION OF WATER FROM CONCRETE SURFACES IMMEDIATELY AFTER LAYING.
- MOIST CURE CONCRETE FOR A MINIMUM OF SEVEN DAYS.

C9. DO NOT ADD WATER TO CONCRETE AFTER TRUCK HAS LEFT BATCHING PLANT.

C10. MIX CONCRETE TO ENSURE UNIFORM DISTRIBUTION OF CONSTITUENTS.

CONCRETE TESTING

C11. TEST SLUMP OF EACH BATCH OF CONCRETE DELIVERED BEFORE PLACING CONCRETE FROM THAT DELIVERY. SLUMP MEASURED TO BE NO GREATER THAN TARGET SLUMP WITHIN TOLERANCES GIVEN IN AS1379 CLAUSE 5.2.3.

C12. CARRY OUT PROJECT ASSESSMENT OF CONCRETE TO AS1379 CLAUSE 6.4 AND 6.5. TAKE SAMPLES AT PROJECT SITE AT POINT OF DISCHARGE FROM AGITATOR. SPREAD SAMPLING EVENLY THROUGH POUR. SAMPLE CONCRETE FOR PROJECT ASSESSMENT CONCURRENTLY WITH EACH SAMPLE TAKEN FOR PRODUCTION ASSESSMENT AT PROJECT SITE. FOR EACH CONCRETE DESIGN MIX TAKE ONE SAMPLE FROM EACH 25 CUBIC METRES OF CONCRETE DELIVERED PER DAY, NOT LESS THAN FIVE SAMPLES TOTAL FOR EACH MIX DESIGN. EACH SAMPLE TO COMPRISE FOUR CYLINDERS: TEST TWO AT 7 DAYS AND TWO AT 28 DAYS.

C13. CARRY OUT DRYING SHRINKAGE TESTING TO AS1012.13. FOR EACH CONCRETE DESIGN MIX TAKE ONE SAMPLE EVERY THREE MONTHS, OR FOR EVERY 200 m^3 OF CONCRETE PLACED, A MINIMUM OF ONE SAMPLE. EACH SAMPLE TO COMPRISE THREE SPECIMENS. SAMPLE CONCRETE AT PROJECT SITE, DIRECTLY FROM DELIVERY VEHICLE. BASE ASSESSMENT ON AVERAGE OF THREE TEST RESULTS.

C14. CONCRETE TESTING TO BE BY AN APPROVED NATA REGISTERED LABORATORY.

FORMWORK

C15. RESPONSIBILITY FOR DESIGN, CERTIFICATION, CONSTRUCTION AND PERFORMANCE OF FORMWORK AND FALSEWORK LIES WITH CONTRACTOR. CERTIFICATION IS TO BE DONE BY A CHARTERED PROFESSIONAL ENGINEER OF THE INSTITUTION OF ENGINEERS AUSTRALIA WITH RELEVANT EXPERIENCE IN THE DESIGN OF FORMWORK.

C16. DO NOT SUPPORT OR RESTRAIN FORMWORK ON PERMANENT WORKS WITHOUT SUPERINTENDENT'S WRITTEN APPROVAL.

C17. CONSTRUCT FORMWORK TO COMPLY WITH AS3610 AND CLAUSE 17.6 OF AS3600 WHERE THIS IS MORE STRINGENT SO CONCRETE WILL HAVE DIMENSIONS, SHAPE, LOCATION AND FINISH SPECIFIED. PROVIDE OPENINGS OR REMOVABLE PANELS FOR INSPECTION AND CLEANING. APPLY RELEASE AGENT COMPATIBLE WITH CONTACT SURFACES TO INTERIOR OF FORMWORK. SEAL JOINTS BETWEEN FORMWORK PANELS, AND TO HARDENED CONCRETE WITH A FLEXIBLE RUBBER STRIP. SET OUT FORMWORK TO GIVE A REGULAR ARRANGEMENT OF PANELS, JOINTS, BOLT HOLES AND SIMILAR VISIBLE ELEMENTS IN FORMED SURFACE.

C18. DO NOT USE FORMWORK HARDWARE THAT FORMS A COMPLETE HOLE THROUGH CONCRETE ELEMENTS. DO NOT USE REINFORCEMENT TO SUPPORT FORMWORK.

C19. PROVIDE HOLES IN REBATE FORMERS, etc, AS REQUIRED TO PREVENT AIR ENTRAPMENT.

C20. DO NOT STRIP FORMWORK UNTIL CONCRETE IS HARDENED SUFFICIENTLY TO WITHSTAND MOVEMENT AND FORM REMOVAL WITHOUT DAMAGE.

C21. STRIP FORMWORK TO AS3600 CLAUSE 17.6. REMOVE FORM TIE BOLTS WITHOUT DAMAGING CONCRETE. PARTS OF BOLTS LEFT IN CONCRETE MUST NOT INTRUDE INTO COVER CONCRETE. FLUSH FILL HOLES USING PRE-MIXED NON-SHRINK CEMENTITIOUS REPAIR MORTAR MATCHING CONCRETE SURFACE COLOUR, STRENGTH AND DURABILITY AND ADEQUATE BOND.

PLACING OF CONCRETE

C22. CONSTRUCTION TOLERANCES TO BE TO AS3610.

C23. REMOVE FREE WATER, DUST AND DEBRIS, STAINS etc FROM FORMS, EXCAVATIONS etc BEFORE PLACING CONCRETE. IN HOT CONDITIONS DAMPEN FORMWORK AND/OR SUB-GRADE BEFORE PLACING CONCRETE.

C24. ELAPSED TIME BETWEEN WETTING OF MIX AND DISCHARGE OF CONCRETE AT SITE MUST BE AS SHORT AS POSSIBLE, AND COMPLY WITH THE FOLLOWING.

CONCRETE TEMPERATURE AT TIME OF DISCHARGE (°C)	MAXIMUM ELAPSED TIME (HOURS)
10 – 24	2.00
24 – 27	1.50
27 - 30	1.00
30 - 32	0.75

C25. USE PLACEMENT METHODS THAT WILL MINIMISE PLASTIC SETTLEMENT AND SHRINKAGE CRACKING. LIMIT VERTICAL FREE FALL BY USE OF CHUTES, etc. KEEP CHUTES VERTICAL, FULL AND IMMERSED IN CONCRETE. PLACE CONCRETE IN LAYERS AND BLEND SUCCEEDING LAYERS BY COMPACTION. MAINTAIN CONCRETE EDGE IN A PLASTIC STATE. PROPERLY COMPACT CONCRETE USING MECHANICAL VIBRATORS (AND HAND METHODS IF REQUIRED) TO REMOVE AIR BUBBLES AND GIVE MAXIMUM COMPACTION WITHOUT SEGREGATION OF CONCRETE. TAKE CARE TO AVOID CONTACT BETWEEN VIBRATORS AND PARTIALLY HARDENED CONCRETE, FORMWORK OR REINFORCEMENT. DO NOT USE VIBRATORS TO MOVE CONCRETE ALONG FORMS.

C26. OBTAIN SUPERINTENDENT'S WRITTEN APPROVAL OF PLACEMENT METHODS FOR CONCRETE ELEMENTS GREATER THAN 1500 mm HEIGHT.

C27. KEEP ON SITE A LOG BOOK RECORDING EACH PLACEMENT OF CONCRETE INCLUDING DATE, CLIMATIC CONDITIONS, PORTION OF WORK, SPECIFIED GRADE AND SOURCE OF CONCRETE, DELIVERY DOCKET DATA, METHODS OF PLACEMENT AND COMPACTION, PROJECT ASSESSMENT CARRIED OUT, SLUMP MEASUREMENTS, VOLUME AND OTHER NOTABLE MATTERS.

C28. IN COLD WEATHER MAINTAIN TEMPERATURE OF FRESHLY MIXED CONCRETE WITHIN LIMITS SHOWN BELOW. "OUTDOOR" AIR TEMPERATURE IS AIR TEMPERATURE AT TIME OF MIXING, OR PREDICTED OR LIKELY AIR TEMPERATURE DURING NEXT 48 HOURS. BEFORE AND WHILE PLACING CONCRETE MAINTAIN TEMPERATURE OF FORMWORK AND REINFORCEMENT AT > 5°C. DO NOT USE CALCIUM CHLORIDE, SALTS, CHEMICALS OR OTHER MATERIAL IN MIX TO LOWER THE FREEZING POINT OF CONCRETE. DO NOT ALLOW FROZEN MATERIALS TO ENTER MIXER. DO NOT USE HIGH ALUMINA CEMENT.

C29. KEEP FORMS, MATERIALS, EQUIPMENT IN CONTACT WITH CONCRETE FREE OF FROST AND ICE. HEAT CONCRETE MATERIALS (OTHER THAN CEMENT) TO MINIMUM TEMPERATURE NECESSARY TO ENSURE TEMPERATURE OF PLACED CONCRETE IS WITHIN LIMITS SPECIFIED. MAXIMUM WATER TEMPERATURE: 60°C WHEN PLACED IN MIXER.

OUTDOOR AIR TEMPERATURE	TEMPERATURE OF CONCRETE	
	MINIMUM	MAXIMUM
> 5°C	10°C	32°C
< 5°C	18°C	32°C

C30. IN HOT WEATHER PREVENT PREMATURE STIFFENING OF FRESH CONCRETE; REDUCE WATER ABSORPTION AND EVAPORATION LOSSES. MIX, TRANSPORT, PLACE AND COMPACT CONCRETE AS QUICKLY AS POSSIBLE. DURING PLACEMENT TEMPERATURE OF CONCRETE MUST NOT EXCEED TEMPERATURES BELOW:

CONCRETE ELEMENT	TEMPERATURE LIMIT
UNREINFORCED CONCRETE IN SECTIONS ≥ 1 METRE EACH DIMENSION,	27°C
CONCRETE f'c ≥ 40 MPa IN SECTIONS ≥ 500 mm THICKNESS	27°C
CONCRETE IN FOOTINGS, BEAMS, COLUMNS, WALLS AND SLABS f'c ≤ 32 MPa	32°C
ELSEWHERE	32°C

DO NOT MIX CONCRETE WHEN SURROUNDING OUTDOOR SHADE TEMPERATURE ≥ 38°C. MAINTAIN TEMPERATURE OF FORMWORK AND REINFORCEMENT AT ≤ 32°C BEFORE AND DURING PLACING. MAINTAIN SPECIFIED TEMPERATURE OF PLACED CONCRETE BY:
- COOL CONCRETE USING LIQUID NITROGEN INJECTION BEFORE PLACING, OR
- COVER CONTAINER IN WHICH CONCRETE IS TRANSPORTED TO FORMS, OR
- SPRAY COARSE AGGREGATE USING COLD WATER, OR
- USE CHILLED MIXING WATER.

C31. PROTECT FRESH CONCRETE FROM PREMATURE DRYING - PARTICULARLY IN HOT, WINDY OR DRY (LOW HUMIDITY) CONDITIONS, EXCESSIVELY HOT OR COLD TEMPERATURES, RAIN, etc. PROVIDE WIND BREAKS. MAINTAIN CONCRETE AT A REASONABLY CONSTANT TEMPERATURE WITH MINIMUM MOISTURE LOSS FOR CURING PERIOD.

C32. FOR CONCRETE WITH WATER:CEMENT RATIO LESS THAN 0.5, IN HOT, WINDY OR DRY (LOW HUMIDITY) CONDITIONS SPRAY EXPOSED SURFACES OF FRESH CONCRETE WITH FOG SPRAY APPLICATION OF ALIPHATIC ALCOHOL RETARDANT IMMEDIATELY AFTER PLACEMENT TO REDUCE RISK OF PLASTIC SHRINKAGE CRACKING. IN SEVERE CLIMATIC CONDITIONS CONSIDER REVIBRATING CONCRETE BEFORE IT REACHES INITIAL SET.

C33. COMMENCE CURING OF CONCRETE TO AS3600 AS SOON AS POSSIBLE AFTER PLACING AND FINISHING OR STRIPPING, AND WITHIN ONE HOUR. ENSURE EXPOSED SURFACES ARE NOT STAINED. ACCEPTABLE METHODS OF CURING INCLUDE:
- RETENTION OF FORMWORK
- PONDING OR CONTINUOUS SPRINKLING WITH WATER (MOIST CURING)
- AN IMPERMEABLE MEMBRANE (USE WHITE OR LIGHT COLOURED PLASTIC IN HOT CONDITIONS). SEAL AROUND EDGES
- AN ABSORPTIVE COVER KEPT CONTINUOUSLY WET AND COVERED BY IMPERMEABLE MEMBRANE
- STEAM CURING
- AN APPROVED CURING COMPOUND (FOR NORMAL CLASS CONCRETE ONLY) PROVIDE:
  - EFFICIENCY INDEX
  - CERTIFIED TEST RESULTS FOR WATER RETENTION TO AS3799 APPENDIX B
  - EVIDENCE THAT AN ACCEPTABLE FINAL SURFACE COLOUR WILL BE OBTAINED
  - EVIDENCE OF COMPATIBILITY WITH CONCRETE AND APPLIED FINISHES (IF ANY)
  - METHODS OF OBTAINING REQUIRED ADHESION FOR TOPPINGS, RENDER etc.
  - UNIFORM CONTINUOUS FLEXIBLE COATING WITHOUT VISIBLE BREAKS OR PINHOLES, WHICH REMAINS UNBROKEN FOR AT LEAST THE CURING PERIOD AFTER APPLICATION.

C34. DO NOT USE WAX-BASED OR CHLORINATED RUBBER-BASED CURING COMPOUNDS ON SURFACES FORMING SUBSTRATES TO APPLIED FINISHES, CONCRETE TOPPINGS AND CEMENT BASED RENDER.

C35. CURE CONTINUOUSLY UNTIL NUMBER OF DAYS DURING WHICH AIR TEMPERATURE IS ABOVE 10°C TOTALS:
- 3 DAYS FOR EXPOSURES CLASSIFICATION A1 AND A2
- 7 DAYS FOR EXPOSURE CLASSIFICATION B1, B2 AND C.

C36. PREVENT RAPID DRYING OUT AT END OF CURING PERIOD.

C37. PROVIDE EXPOSED EDGES AND RE-ENTRANT CORNERS WITH 45 DEGREES x 25 mm CHAMFERS OR FILLETS UNO

C38. DO NOT MAKE HOLES, PENETRATIONS, RECESSES, CHASES, NOR EMBED PIPES (OTHER THAN THOSE SHOWN ON STRUCTURAL DRAWINGS) WITHOUT APPROVAL OF SUPERINTENDENT. DO NOT PLACE CONDUITS, PIPES etc WITHIN COVER CONCRETE. LOCATE CONDUITS, PIPES etc ONLY IN MIDDLE THIRD OF SLAB OR BEAM DEPTH AND BETWEEN REINFORCEMENT LAYERS, AND SPACED AT 3 x DIAMETER CENTRES MINIMUM. DO NOT CUT REINFORCEMENT AT PENETRATIONS WITHOUT APPROVAL

C39. PROVIDE DRIP GROOVES IN SOFFIT OF BEAMS AND SLABS AT EXTERNAL PERIMETER OF STRUCTURES. ENSURE COVER TO REINFORCEMENT IS ACHIEVED.

C40. REMOVE PROPS AND FORMWORK FOR BEAMS AND SLABS AND ENSURE CONCRETE HAS GAINED ADEQUATE STRENGTH BEFORE CONSTRUCTING WALLS OR PLACING OTHER PERMANENT LOADING ON WORK.

No.	REVISION DETAILS	DWN	DATE
0	ISSUED FOR TENDER	RK	16.04.21

CONSULTANT DETAILS:
GHD
2/57 Graham Street
Nowra NSW 2541
T 61 2 4424 4900 F 61 2 4424 4999
www.ghd.com

CONSULT. REFERENCE No. 23-14266-41-02

Shoalhaven Water
A Group of Shoalhaven City Council

DESIGNED: KS	DATE: 30.07.14	COMPANY: GHD	
DRAWN: AK	DATE: 30.07.14	COMPANY: GHD	
CHECKED: MS	DATE: 01.04.21	COMPANY: GHD	
APPROVED: CS	DATE: 16.04.21	COMPANY: GHD	

TITLE:
SHOALHAVEN WATER
ST ANNS PUMPING STATION UPGRADE

STRUCTURAL NOTES
SHEET 1 OF 2

SIZE	SCALE	INDEX No.	DRAWING No.	SHEET	REV No.
A3	N/A		23-1426641-02		0

Plot Date: 15/04/21 - 00:17 Cad File: C:\CAD\temp\AcPublish_811544\23-1426641-02.dwg

C41. WHERE CONCRETE BEARS ON LOAD BEARING MASONRY AND BRICKWORK, TROWEL SMOOTH AND FLAT A 5 mm THICK LAYER OF MORTAR AND SEPARATE CONCRETE THEREFROM WITH TWO LAYERS OF "SUPER ALCOR".

C42. FINISH CONCRETE SURFACES TO AS3610 AND AS SHOWN BELOW:

FORMED SURFACE FINISH:

(a) EXPOSED SURFACES (EXPOSED TO LIQUID AND AIR) - CLASS 2 TO AS3610.

(b) BURIED SURFACES – CLASS 3 TO AS3610.

UNFORMED SURFACE FINISH:

(a) WATER RETAINING STRUCTURES : STEEL TROWEL FINISH

(b) OTHER STRUCTURES: WOOD FLOAT FINISH.

C43. ALL LIQUID RETAINING STRUCTURES SHALL BE TESTED FOR WATER TIGHTNESS IN ACCORDANCE WITH CLAUSE 7.3 OF AS3735.

TESTING SHALL TAKE PLACE AND SUCCESSFULLY COMPLETED PRIOR TO BACKFILL AROUND STRUCTURES AND PRIOR TO PLACING CONCRETE BENCHING OR MORTAR TOPPING.

JOINTS

C44. FORM CONSTRUCTION JOINTS AND USE ONLY WHERE SHOWN OR WHERE APPROVED BY CONTRACTOR'S DESIGNER. CONSTRUCTION JOINTS IN SLABS TO BE VERTICAL, STRAIGHT AND TRUE. TO ACHIEVE ADEQUATE BOND ENSURE ENTIRE SURFACE IS CLEAN, FREE OF LAITANCE AND BLEMISHES, AND INTENTIONALLY ROUGHENED TO A FULL AMPLITUDE OF NOT LESS THAN 5 mm WITH COARSE AGGREGATE EXPOSED. UNLESS NOTED OTHERWISE, COAT EXISTING CONCRETE WITH NEAT CEMENT SLURRY JUST BEFORE PLACING ADJACENT FRESH CONCRETE SO THAT CEMENT SLURRY REMAINS PLASTIC.

C45. PROVIDE JOINTING MATERIALS COMPATIBLE WHEN USED TOGETHER, AND NON-STAINING TO CONCRETE IN VISIBLE LOCATIONS.

C46. INSTALL HYDROPHILIC WATERSTOPS ONTO SMOOTH CONCRETE SURFACE STRICTLY IN ACCORDANCE WITH MANUFACTURER'S WRITTEN REQUIREMENTS. DO NOT SCABBLE CONCRETE BENEATH THESE WATERSTOPS.

C47. DO NOT INSTALL SEALANTS IF EXPECTED MAXIMUM DAILY TEMPERATURE EXCEEDS 30 DEGREES C. ENSURE RECESSES ARE CLEAN AND DRY PRIOR TO INSTALLING FILLERS OR SEALANTS, AND PREPARE IN ACCORDANCE WITH MANUFACTURER'S RECOMMENDATIONS. TOLERANCE ON SEALANT WIDTHS +5, -0 mm.

REINFORCEMENT COVER

C48. COVER IS CLEAR DISTANCE BETWEEN ANY REINFORCEMENT (INCLUDING LIGATURES, TIE WIRE etc) AND OUTSIDE SURFACE OF STRUCTURAL CONCRETE.

C49. MINIMUM CLEAR COVER OF REINFORCEMENT WILL BE AS FOLLOWS :

LIQUID FACE OF WET WELL= 75 mm

EXTERNAL FACES IN CONTACT WITH GROUND = 65mm

ALL OTHER FACES = 50mm

REINFORCEMENT

R1. SYMBOLS ON DRAWINGS FOR GRADE AND TYPE OF REINFORCEMENT ARE AS FOLLOWS:
- R: STRUCTURAL GRADE 250 PLAIN ROUND BAR TO AS/NZS4671
- N: HOT ROLLED GRADE 500 DEFORMED (RIBBED) BAR DUCTILITY CLASS N TO AS/NZS4671
- L: HOT ROLLED GRADE 500 DEFORMED BAR DUCTILITY CLASS L TO AS/NZS4671
- SL: HARD DRAWN WIRE GRADE 500 SQUARE MESH DUCTILITY CLASS L TO AS/NZS4671
- RL:HARD DRAWN WIRE GRADE 500 RECTANGULAR MESH DUCTILITY CLASS L TO AS/NZS4671
- TM: HARD DRAWN STEEL GRADE 500 TRENCH MESH DUCTILITY CLASS L TO AS/NZS4671
- W: GRADE 500 STEEL REINFORCING WIRE TO AS/NZS4671

R2. PROVIDE ACRS (AUSTRALIAN CERTIFICATION AUTHORITY FOR REINFORCING STEEL LTD) CERTIFICATION OF COMPLIANCE WITH AS/NZS4671 FOR ALL REINFORCEMENT. PROVIDE CERTIFICATION OF COMPLIANCE WITH AS1311 FOR ALL PRESTRESSING TENDONS.

R3. PROVIDE DOCUMENTATION TO SHOW THAT REINFORCEMENT SUPPLIER AND MILL COMPLIES WITH AS/NZS4671.

R4. REINFORCEMENT MUST HAVE UNIQUE MARKS TO IDENTIFY SUPPLIER.

R5. DO NOT USE LOW DUCTILITY REINFORCEMENT (GRADE L) UNO.

R6. USE MESH SUPPLIED IN FLAT SHEETS UNLESS APPROVED OTHERWISE.

R7. REINFORCEMENT TO BE CLEAN, FREE OF LOOSE MILL SCALE, RUST, OIL, GREASE, MUD OR OTHER MATERIAL THAT MIGHT REDUCE BOND BETWEEN REINFORCEMENT AND CONCRETE.

R8. SUBMIT PROPOSAL FOR CUTTING OR DISPLACING REINFORCEMENT

R9. DESIGNATION OF REINFORCEMENT BARS IS AS SHOWN:
eg. 17 N20 - 350 EF
- 17: DENOTES No OF BARS AND TYPE IN GROUP
- N: DENOTES BAR GRADE AND DUCTILITY CLASS
- 20: DENOTES NOMINAL BAR DIAMETER IN mm
- 350: DENOTES SPACING IN mm
- EF:DENOTES LOCATION

R10. TO MINIMIZE TRIP HAZARDS CONSIDER MAXIMUM REINFORCEMENT BAR SPACING FOR TRAFFICABLE AREAS PRIOR TO CASTING CONCRETE OF 200 mm. ALTERNATIVELY PROVIDE SL82 ADDITIONAL IF MAIN REINFORCEMENT SPACING IS GREATER THAN 200 mm.

R11. FOLLOWING ABBREVIATIONS APPLY TO LOCATION OF REINFORCEMENT:

EW: EACH WAY	FF: FAR FACE	BB: BOTTOM BOTTOM (LAID FIRST)
EF: EACH FACE	B: BOTTOM	TT: TOP TOP (LAID LAST)
NF: NEAR FACE	T: TOP	C OR CP: CENTRALLY PLACED

R12. PROVIDE STANDARD COGS AND HOOKS TO AS3600. TERMINATE ENDS OF COLUMN AND BEAM LIGATURES IN A HOOK OF AT LEAST 135 DEGREES. PROVIDE FIRST LIGATURE WITHIN 50 mm OF FACE OF SUPPORT.

R13. PROVIDE ONE CONTINUOUS BAR PARALLEL TO (WITHIN 75 mm OF) CONCRETE EDGES, INCLUDING CONSTRUCTION JOINTS UNO.

R14. REINFORCEMENT IS REPRESENTED DIAGRAMMATICALLY AND IS NOT NECESSARILY IN TRUE PROJECTION. SET REINFORCEMENT OUT AT EQUAL CENTRES IF SPACING IS NOT NOMINATED.

R15. CAP STARTER BARS AND OTHER REINFORCEMENT TO REDUCE RISK OF IMPALEMENT AND LACERATIONS.

R16. ENSURE ALL LAID REINFORCING BARS ARE RESTRAINED BEFORE STOPPING WORK TO PREVENT BARS ROLLING UNDERFOOT.

R17. SECURE REINFORCEMENT IN POSITION AGAINST DISPLACEMENT AND MAINTAIN SPECIFIED CLEAR CONCRETE COVER TO REINFORCEMENT (INCLUDING FITMENTS) BY APPROVED CHAIRS, SPACERS, LIGATURES OR TIES AT 800 mm MAXIMUM CENTRES EACH WAY UNO. PROVIDE ADEQUATE SUPPORT TO PREVENT DISPLACEMENT OF REINFORCEMENT BY WORKMEN OR EQUIPMENT DURING CONCRETE PLACEMENT.

R18. SECURELY TIE REINFORCEMENT WITH WIRE TIES. TURN ENDS OF TIE WIRES INTO CONCRETE, CLEAR OF COVER ZONE.

R19. TIE BUNDLED BARS TOGETHER SO THEY ARE IN CLOSEST POSSIBLE CONTACT WITH 2.5 mm DIAMETER WIRE AT CENTRES LESS THAN 24 TIMES DIAMETER OF SMALLEST BAR IN BUNDLE.

R20. FOR BEAMS, TIE STIRRUPS TO BARS IN EACH CORNER OF EACH STIRRUP. FIX OTHER LONGITUDINAL BARS TO STIRRUPS AT 1000 MAXIMUM CENTRES.

R21. FOR EXTERNAL OR CORROSIVE APPLICATIONS USE HOT DIP GALVANIZED TIE WIRES.

R22. SUPPORT REINFORCEMENT ON PROPRIETARY CONCRETE, METAL OR PLASTIC SUPPORTS ADEQUATE TO WITHSTAND CONSTRUCTION AND TRAFFIC LOADS AND MAINTAIN DURABILITY OF FINISHED CONCRETE STRUCTURE. FOR CONCRETE SURFACES WITH B2 EXPOSURE CLASSIFICATION OR GREATER, ONLY USE PROPRIETARY HIGH STRENGTH FIBRE REINFORCED CEMENT SPACER BLOCKS OR SUPPORTS.

R23. DO NOT PLACE OR MOVE REINFORCEMENT DURING OR AFTER CONCRETE PLACEMENT.

R24. ENSURE EMBEDDED ITEMS (INSERTS, THREADED SOCKETS, FERRULES, BOLTS, DISSIMILAR METAL ITEMS, etc) IN COVER CONCRETE OR EXPOSED TO AIR ARE NOT IN CONTACT WITH REINFORCEMENT. PROVIDE ISOLATION BETWEEN DISSIMILAR METALS, AND BETWEEN REINFORCEMENT AND EXPOSED ITEMS.

R25. SPLICE REINFORCEMENT ONLY AT LOCATIONS SHOWN ON DRAWINGS OR AS APPROVED BY SUPERINTENDENT. STAGGER LAPS WHERE POSSIBLE. LAPPED SPLICE LENGTHS TO COMPLY WITH AS3600. CLEAR SPACING BETWEEN LAPPED BARS TO BE LESS THAN THREE TIMES BAR DIAMETER.

R26. LAPPED SPLICE LENGTHS FOR HORIZONTAL BARS WITH MORE THAN 300 mm CONCRETE CAST BELOW THE BAR AND SPACED AT ≥ 150 mm CENTRES TO COMPLY WITH THE FOLLOWING UNO:

COVER	f'c	N12	N16	N20	N24	N28	N32
≥ 25	≥20	770	1150	1570	-	-	-
≥ 30	≥25	630	980	1350	1740	-	-
≥ 40	≥32	510	770	1100	1440	1810	2220
≥ 50	≥ 40	460	630	890	1200	1530	1890

DO NOT INTERPOLATE INTERMEDIATE VALUES OF SPLICE LENGTHS.
LAPPED SPLICE LENGTHS FOR BARS IN COLUMNS REFER TO AS3600 OR SUPERINTENDENT.
EPOXY COATED BARS, BARS IN LIGHTWEIGHT CONCRETE AND SLIP FORMED CONCRETE WILL REQUIRE LONGER SPLICE LENGTHS. REFER TO AS3600 OR SUPERINTENDENT.

R27. LAPPED SPLICE LENGTHS FOR VERTICAL BARS (AND HORIZONTAL BARS WITH LESS THAN 300 mm CONCRETE CAST BELOW THE BAR) SPACED AT ≥ 150 mm CENTRES TO COMPLY WITH THE FOLLOWING UNO:

COVER	f'c	N12	N16	N20	N24	N28	N32
≥ 25	≥ 20	590	890	1210	-	-	-
≥ 30	≥25	490	750	1040	1340	-	-
≥ 40	≥32	390	600	840	1110	1400	1710
≥ 50	≥40	350	480	690	920	1180	1450

NOT APPLICABLE FOR BARS IN COLUMNS.
DO NOT INTERPOLATE INTERMEDIATE VALUES OF SPLICE LENGTHS.
LAPPED SPLICE LENGTHS FOR BARS IN COLUMNS REFER TO AS3600 OR SUPERINTENDENT.
EPOXY COATED BARS, BARS IN LIGHTWEIGHT CONCRETE AND SLIP FORMED CONCRETE WILL REQUIRE LONGER SPLICE LENGTHS. REFER TO AS3600 OR SUPERINTENDENT.

R28. REINFORCEMENT SPLICES IN TENSION MEMBERS MUST BE WELDED OR MECHANICAL SPLICES.

R29. ENSURE REINFORCEMENT COUPLERS PROVIDE FULL TENSION CAPACITY OF REINFORCEMENT.

R30. LAY MESH REINFORCEMENT SO THAT MINIMUM COVER IS TO MAIN WIRES UNO.

R31. DO NOT WELD REINFORCEMENT UNLESS SHOWN ON DRAWINGS OR OTHERWISE APPROVED BY SUPERINTENDENT. WHERE ALLOWED, WELDING OF REINFORCEMENT (INCLUDING TACK-WELDING FOR FIXING PURPOSES) TO COMPLY WITH AS3600 AND AS/NZS1554.3. DO NOT WELD REINFORCEMENT WITHIN 75 mm OF A SECTION THAT HAS BEEN BENT (100 mm FOR N28 AND N32 BARS, 125 mm FOR N36 BARS).
EXTENT OF WELD INSPECTION/TESTING TO BE:
- VISUAL SCANNING 100% OF WELDS
- VISUAL EXAMINATION 50% OF WELDS
- RADIOGRAPHIC OR ULTRASONIC 5% OF FILLET WELDS AND 100% OF BUTT WELDS.

LEGEND

—— / —— / ——	NEW 2.4m HIGH MANPROOF FENCE TO MATCH EXISTING. REFER NOTE 4 ON DRAWING 42-1426641-05
– – – – – – – – – – – –	NEW RISING MAIN (CENTRE LINE)
—— – – – – TRM ——	TEMPORARY RISING MAIN
—— – – – – S ——	NEW SEWER
—— – – – – E ——	NEW ELECTRICAL

No.	REVISION DETAILS	DWN	DATE
0	ISSUED FOR TENDER	RK	16.04.21

CONSULTANT DETAILS:
GHD
2/57 Graham Street
Nowra NSW 2541
T 61 2 4424 4900 F 61 2 4424 4999
www.ghd.com

CONSULT. REFERENCE No. 23-14266-41-03

Shoalhaven Water
A Group of Shoalhaven City Council

DESIGNED: KS	DATE: 30.07.14	COMPANY: GHD
DRAWN: AK	DATE: 30.07.14	COMPANY: GHD
CHECKED: MS	DATE: 01.04.21	COMPANY: GHD
APPROVED: CS	DATE: 16.04.21	COMPANY: GHD

TITLE:
SHOALHAVEN WATER
ST ANNS PUMPING STATION UPGRADE

STRUCTURAL NOTES
SHEET 2 OF 2

SIZE	SCALE	INDEX No.	DRAWING No.	SHEET	REV No.
A3	N/A		23-1426641-03		0

Plot Date: 15/04/21 - 00:17 Cad File: C:\CAD\temp\AcPublish_811544\23-1426641-03.dwg

ASPHALT PAVEMENT ACCESS ROAD. REFER DRAWING 23-1426641-05 FOR DETAILS

TEMPORARY POWER POLE LOCATION (LOCATION TO BE CONFIRMED BY SUPERINTENDENT PRIOR TO CONSTRUCTION)

EXISTING ACCESS ROAD

EXISTING GATE TO BE REMOVED AND REPLACED IN ACCORDANCE WITH SHOALHAVEN CITY COUNCIL SECURITY FENCE SUPPLY AND INSTALLATION SPECIFICATION

NEW SPS3 RISING MAIN BY OTHERS

FLOWMETER PIT. REFER DETAIL ON DRAWING 23-1426641-17

EXISTING FENCING TO BE REMOVED AND REPLACED IN ACCORDANCE WITH SHOALHAVEN CITY COUNCIL SECURITY FENCE SUPPLY AND INSTALLATION SPECIFICATION

ELECTRICAL CONDUITS AND PIT LAYOUT, REFER DRAWING 23-1426641-225

EXISTING DN150 GRAVITY SEWER

EXISTING RISING MAIN TO BE REMOVED.

ODOUR AND SEPTICITY CONTROL AREA REFER DRAWING 23-1426641-05 FOR DETAILS

EXISTING SPS TO BE DECOMMISSIONED REFER NOTE 1

EXISTING SPS No. 3 DRY/WET WELL

EXISTING VENT TO BE REMOVED ONCE NEW SPS3 IS BROUGHT ONLINE. REFER NOTE 1

EXISTING ODOUR CONTROL TO BE DECOMMISSIONED. REFER NOTE 1

EXISTING DN150 GRAVITY SEWER

EXISTING DN600 GRAVITY SEWER

NEW MH02

NEW DN150, PVCU PN12

NEW DN600 OVERFLOW PIPE REFER DRAWING 23-1426641-15 FOR DETAILS

EXISTING STORMWATER DRAIN LINE FROM EXISTING SPS3 BUNDED AREA. REFER TO DRAWING 23-1426641-14 FOR TREATMENT

EXISTING DN450 GRAVITY SEWER

NEW DN225, PP, SN10 RRJ

EXISTING DN225 GRAVITY SEWER

NEW MH04

NEW DN450 PP, SN10 GRAVITY SEWER

EXISTING HEADWALL OUTFALL TO BE REMOVED

NEW DN150 PVC-U DWV, SWJ, SN8

NEW DN150 PVC-U DWV, SWJ, SN8

EXISTING ODOUR PIPE WORK

NEW DN600 DIEL SO-SP

NEW MH01

EXISTING DN600 & DN225 PIPE

EXISTING EMERGENCY STORAGE TANK

EXISTING SPS3 ELECTRICAL SUPPLY TO BE RE-ROUTED PRIOR TO CONSTRUCTION. REFER NOTE 6

CONNECTION TO EXISTING DN450 FLANGE. REFER DRAWING 23-1426641-21 FOR CONNECTION DETAILS

EXISTING WATERMAIN TO BE LOWERED FOR NEW RISING MAIN.

NEW DN375 DICL RISING MAIN

NEW DN25 POTABLE WATER SERVICE

NEW WATER METER

RPZ DEVICE REFER DRAWING 23-1426641-20

NEW VALVE CHAMBER

NEW SPS3 WET WELL

ST ANNS STREET

LOT 1 DP 531142

PROPOSED PAD MOUNTED TRANSFORMER

DN180 PE100 PN16 SCOUR LINE

SWITCHROOM DETAILS TO BE CONFIRMED

NEW SWITCH ROOM

LOT 701 DP 1025653

LINE OF EAVES AND GUTTERS TO SWITCH ROOM

REFER DRAWINGS 23-1426641-227 AND 23-1426641-228 FOR SWITCHROOM DETAILS

GENERATOR AREA

EXISTING FENCING TO BE REMOVED AND REPLACED IN ACCORDANCE WITH SHOALHAVEN CITY COUNCIL SECURITY FENCE SUPPLY AND INSTALLATION SPECIFICATION

NEW 1m WIDE CONCRETE FOOTPATH AROUND EMERGENCY STORAGE TANK

NOTES:

1. EXISTING SPS FACILITY TO BE DEMOLISHED.
2. REFER TO DRAWING 23-1426641-03 FOR LEGEND.
3. REFER TO DRAWING 23-1426641-02 AND 23-1426641-03 FOR GENERAL NOTES.
4. REFER TO DRAWING 23-1426641-12 FOR GRAVITY SEWER WORKS.
5. REFER TO DRAWING 23-1426641-28 FOR TYPICAL TRENCH DETAILS FOR GRAVITY SEWER AND RISING MAIN PIPELINES.
6. TEMPORARY DIVERSION OF EXISTING ELECTRICAL SUPPLY TO BE CARRIED OUT BY SHOALHAVEN WATER PRIOR TO CONSTRUCTION WORKS ON SITE.

0 2.0 4.0 6.0 8.0
2.0 0
HORIZONTAL SCALE 1:200

No.	REVISION DETAILS	DWN	DATE
0	ISSUED FOR TENDER	RK	16.04.21

CONSULTANT DETAILS:
GHD
2/57 Graham Street
Nowra NSW 2541
T 61 2 4424 4900 F 61 2 4424 4999
www.ghd.com

CONSULT. REFERENCE No. 23-14266-41-04

Shoalhaven Water
A Group of Shoalhaven City Council

DESIGNED: ET	DATE: 30.07.14	COMPANY: GHD	
DRAWN: JL	DATE: 30.07.14	COMPANY: GHD	
CHECKED: MS	DATE: 16.04.21	COMPANY: GHD	
APPROVED: CS	DATE: 16.04.21	COMPANY: GHD	

TITLE:
SHOALHAVEN WATER
ST ANNS PUMPING STATION UPGRADE

SITE LAYOUT

SIZE	SCALE	INDEX No.	DRAWING No.	SHEET	REV No.
A3	1:200		23-1426641-04		0

Plot Date: 15/04/21 - 16:19 Cad File: N:\AU\Wollongong\Projects\23\12540351\CADD\Drawings\St Anns\23-1426641-04.dwg

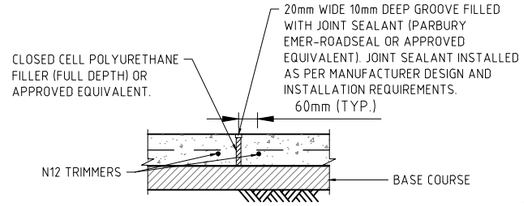

EXPANSION JOINT (EJ) DETAIL

SCALE 1:20

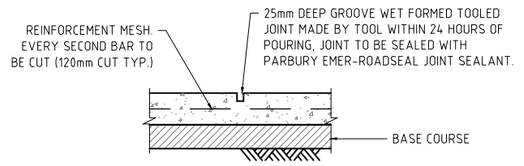

TOOL JOINT (TJ) DETAIL

SCALE 1:20

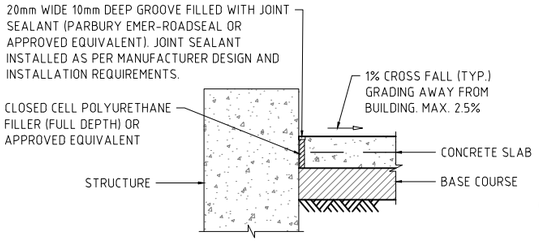

TYPICAL DETAIL ISOLATION JOINT (IJ)

SCALE 1:20

NOTES:
1. JOINT TO BE CLEAN DRY AND FREE OF ALL LOOSE MATERIAL PRIOR TO APPLICATION OF SEALANT
2. 'IJ' JOINT TO BE USED WHERE ABUTTING OTHER STRUCTURES SUCH AS BUILDINGS, KERBS AND PITS

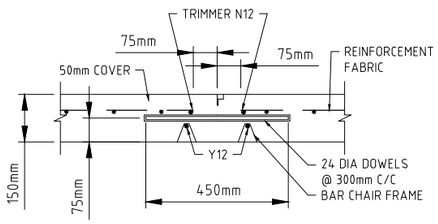

SAWN JOINT (SJ)

NTS

NOTES
1. DOWELS PLASTIC WRAPPED FULL LENGTH.
2. DOWELS RIGIDLY SUPPORTED ON BAR CHAIR FRAME WITH DOWELS PERPENDICULAR TO SAWCUT.
3. MARK POSITION OF SAWCUT ON FORMWORK. DO NOT POUR CONCRETE UNTIL POSITION OF MARK AND DOWEL FRAME HAS BEEN VERIFIED BY SUPERINTENDENT.

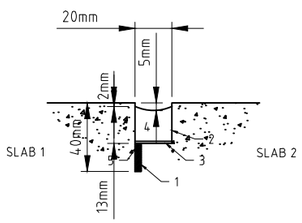

SAWN JOINT SEALANT DETAIL

'T' DENOTES PAVEMENT THICKNESS

NOTES
1. CUT 3-5mm WIDE WITHIN 1 DAY OF PLACING CONCRETE SEALED OFF UNTIL GROOVE WIDENED.
2. GROOVE WIDENED BY SAWCUTS AFTER SLAB CURING PERIOD.
3. BOND BREAKER TAPE.
4. JOINT SEALANT PARBURY EMER-ROADSEAL OR APPROVED EQUIVALENT IN ACCORDANCE WITH MANUFACTURER'S INSTRUCTIONS.
5. ROUND CLOSED-CELL BACKING ROD INTO SAWCUT 1mm BELOW BOND BREAKER TAPE.

PLAN

SCALE 1:200

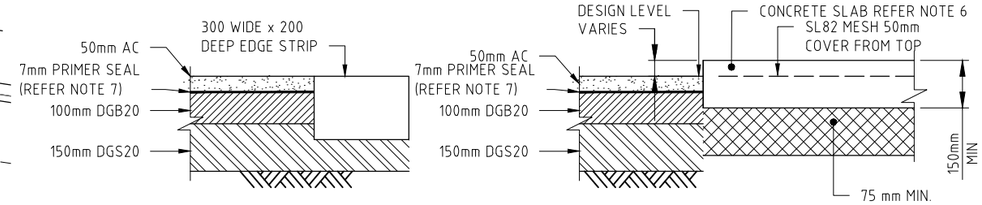

TYPICAL SECTION THROUGH ROAD PAVEMENT

SCALE 1:20

LEGEND

- NEW CONCRETE EDGE STRIP 200mm WIDE x 300mm DEEP
- NEW REINFORCED CONCRETE
- NEW AC ROAD PAVEMENT

MANHOLE SETOUT TABLE

SOP	EASTING	NORTHING	DESCRIPTION
1	280337.03	6137146.84	CENTER MH04
2	280348.97	6137151.16	CENTER MH03
3	280348.06	6137158.67	CENTER MH01
4	280336.90	6137163.13	CENTER MH02
5	280339.08	6137156.89	END OF OVERFLOW

SETOUT POINTS

POINT	EASTING	NORTHING	DESIGN LEVEL
1	280352.18	6137194.64	MATCH EXISTING
2	280368.97	6137192.10	MATCH EXISTING
3	280362.21	6137186.97	18.735
4	280361.33	6137180.54	18.490
5	280360.39	6137173.70	18.425
6	280363.81	6137169.20	18.400
7	280374.66	6137167.72	18.400
8	280373.90	6137162.23	18.250
9	280346.30	6137166.02	18.250
10	280346.98	6137171.03	18.350
11	280349.03	6137173.77	18.400
12	280353.26	6137173.19	18.400
13	280355.51	6137174.90	18.420
14	280356.05	6137178.82	18.460
15	280357.29	6137187.89	18.700
16	280367.58	6137163.10	18.250
17	280357.97	6137164.42	18.250
18	280351.28	6137175.68	18.600
19	280353.91	6137179.46	18.600

NOTES:
1. REFER TO DRAWING 23-1426641-26 FOR ACCESS COVER, SPS3 AND VALVE CHAMBER SETOUT.
   - REFER TO DRAWING 23-1426641-17 FOR FLOWMETER PIT SETOUT.
   - REFER TO DRAWING 23-1426641-225 FOR SWITCHROOM SETOUT.
   - REFER TO DRAWING 23-1426641-25 FOR PIPEWORK PENETRATION SETOUT AND DEPTHS.
2. REFER TO DRAWING 23-1426641-02 AND 03 FOR GENERAL NOTES.
3. REFER TO DRAWING 23-1426641-12 FOR GRAVITY SEWER WORKS.
4. REFER TO SHOALHAVEN WATER STANDARD DRAWING S24357-48 FOR TYPICAL MAN PROOF FENCE DETAIL.
5. DESIGNED SITE LEVELS TO TIE INTO EXISTING SITE LEVELS, UNLESS SPECIFIED.
6. USE MINIMUM GRADE N32 CONCRETE. FOR CONCRETE AREAS OTHER THAN THE DRIVEWAY EXPANSION JOINTS TO BE PROVIDED EVERY 6m AND TOOL JOINTS TO BE PROVIDED EVERY 2m. ISOLATION JOINTS TO BE PROVIDED BETWEEN CONCRETE SLAB AND EXISTING STRUCTURES.
7. A MINIMUM OF A 72 HOUR WAIT BETWEEN THE PRIME SEAL AND THE AC.
8. KERB AND GUTTER EXTENSION TO EXISTING KERB AND GUTTER WITH 2m WIDE AC SHOULDER FOR ACCESS. ALL VALVE BOXES TO BE TRAFFICABLE AND FLUSH WITH PAVEMENT LEVEL.

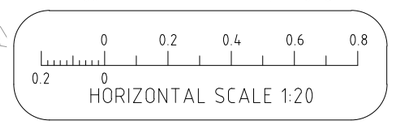

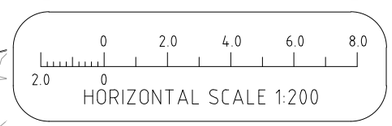

No.	REVISION DETAILS	DWN	DATE
0	ISSUED FOR TENDER	RK	16.04.21

CONSULTANT DETAILS:
GHD
2/57 Graham Street
Nowra NSW 2541
T 61 2 4424 4900 F 61 2 4424 4999
www.ghd.com

CONSULT. REFERENCE No. 23-14266-41-05

Shoalhaven Water
A Group of Shoalhaven City Council

DESIGNED: JW	DATE: 30.07.14	COMPANY: GHD	
DRAWN: AK	DATE: 30.07.14	COMPANY: GHD	
CHECKED: MS	DATE: 01.04.21	COMPANY: GHD	
APPROVED: CS	DATE: 16.04.21	COMPANY: GHD	

TITLE:
SHOALHAVEN WATER
ST ANNS PUMPING STATION UPGRADE

PAVEMENT DETAILS AND SETOUT PLAN

SIZE	SCALE	INDEX No.	DRAWING No.	SHEET	REV No.
A3	1:200		23-1426641-05		0

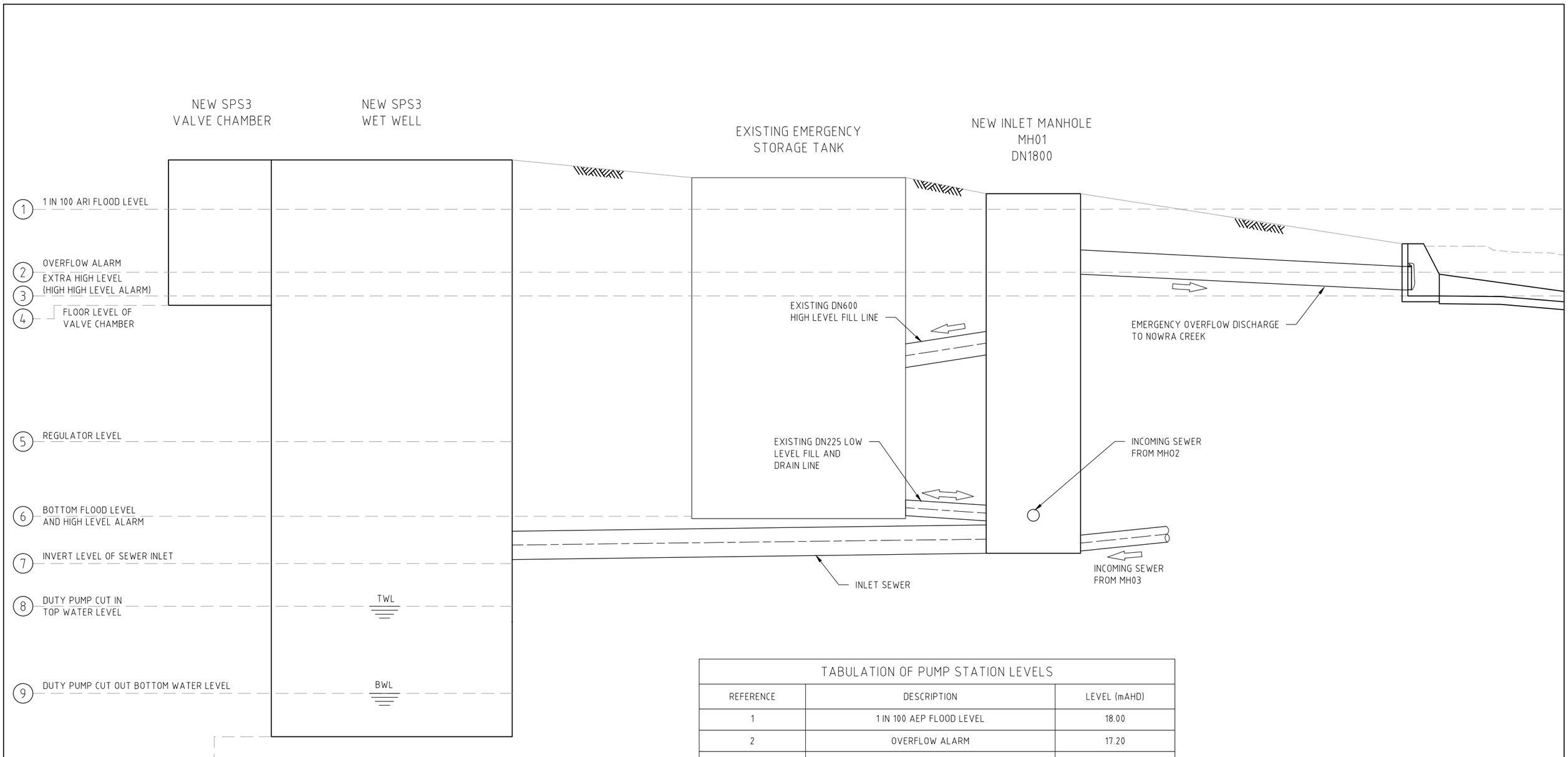

EMERGENCY STORAGE CAPACITIES	
CHAMBER	VOLUME m^3
WET WELL	35.400
EMERGENCY STORAGE TANK	40.900
INLET MANHOLE	11.600

TABULATION OF PUMP STATION LEVELS		
REFERENCE	DESCRIPTION	LEVEL (mAHD)
1	1 IN 100 AEP FLOOD LEVEL	18.00
2	OVERFLOW ALARM	17.20
3	HIGH HIGH LEVEL ALARM	16.90
4	FLOOR LEVEL OF VALVE CHAMBER	REFER SPS3 STRUCTURAL DRAWING 23-1426641-23
5	TOP FLOOD LEVEL	15.60
6	HIGH LEVEL ALARM	14.10
7	INVERT LEVEL OF INLET SEWER	13.45
8	DUTY PUMP CUT IN - TOP WATER LEVEL	13.40
9	DUTY PUMP CUT OUT - BOTTOM WATER LEVEL	11.40
10	INVERT OF WET WELL	REFER SPS3 STRUCTURAL DRAWING 23-1426641-23

No.	REVISION DETAILS	DWN	DATE
0	ISSUED FOR TENDER	RK	16.04.21

CONSULTANT DETAILS:
GHD
2/57 Graham Street
Nowra NSW 2541
T 61 2 4424 4900 F 61 2 4424 4999
www.ghd.com

CONSULT. REFERENCE No.
23-14266-41-06

Shoalhaven Water
A Group of Shoalhaven City Council

DESIGNED: ET	DATE: 30.07.14	COMPANY: GHD	
DRAWN: KDM	DATE: 30.07.14	COMPANY: GHD	
CHECKED: MS	DATE: 01.04.21	COMPANY: GHD	
APPROVED: CS	DATE: 16.04.21	COMPANY: GHD	

TITLE:
SHOALHAVEN WATER
ST ANNS PUMPING STATION UPGRADE

LEVEL AND CAPACITIES INTERACTION DIAGRAM

SIZE:	SCALE:	INDEX No.	DRAWING No.	SHEET	REV No.
A3	NTS		23-1426641-06		0

Plot Date: 15/04/21 - 00:18 Cad File: C:\CAD\temp\AcPublish_811544\23-1426641-06.dwg

NOTE:

1. REFER WSA07 DRAWING WAT1200 AND WAT1205 FOR THRUST BLOCK DIMENSIONS AND DETAILS.
2. DN150 uPVC VENTILATION PIPE AND ELECTRIC CONDUITS SHALL BE CAST INTO WET WELL WALLS.
3. PENETRATIONS TO BE PROVIDED IN WET WELL AND VALVE CHAMBER WALLS FOR PIPEWORK. REFER STRUCTURAL DRAWING 23-1426641-23 AND 25 FOR PENETRATION POSITIONING, SETOUT AND LEVELS.
4. REFER DRAWING 23-1426641-27 FOR PIPE PENETRATION DETAILS.
5. THRUST TYPE DISMANTLING JOINT TO BE INSTALLED FOR CONSTRUCTION OF THE PIT AND REMOVED AND PLACED IN STORAGE.

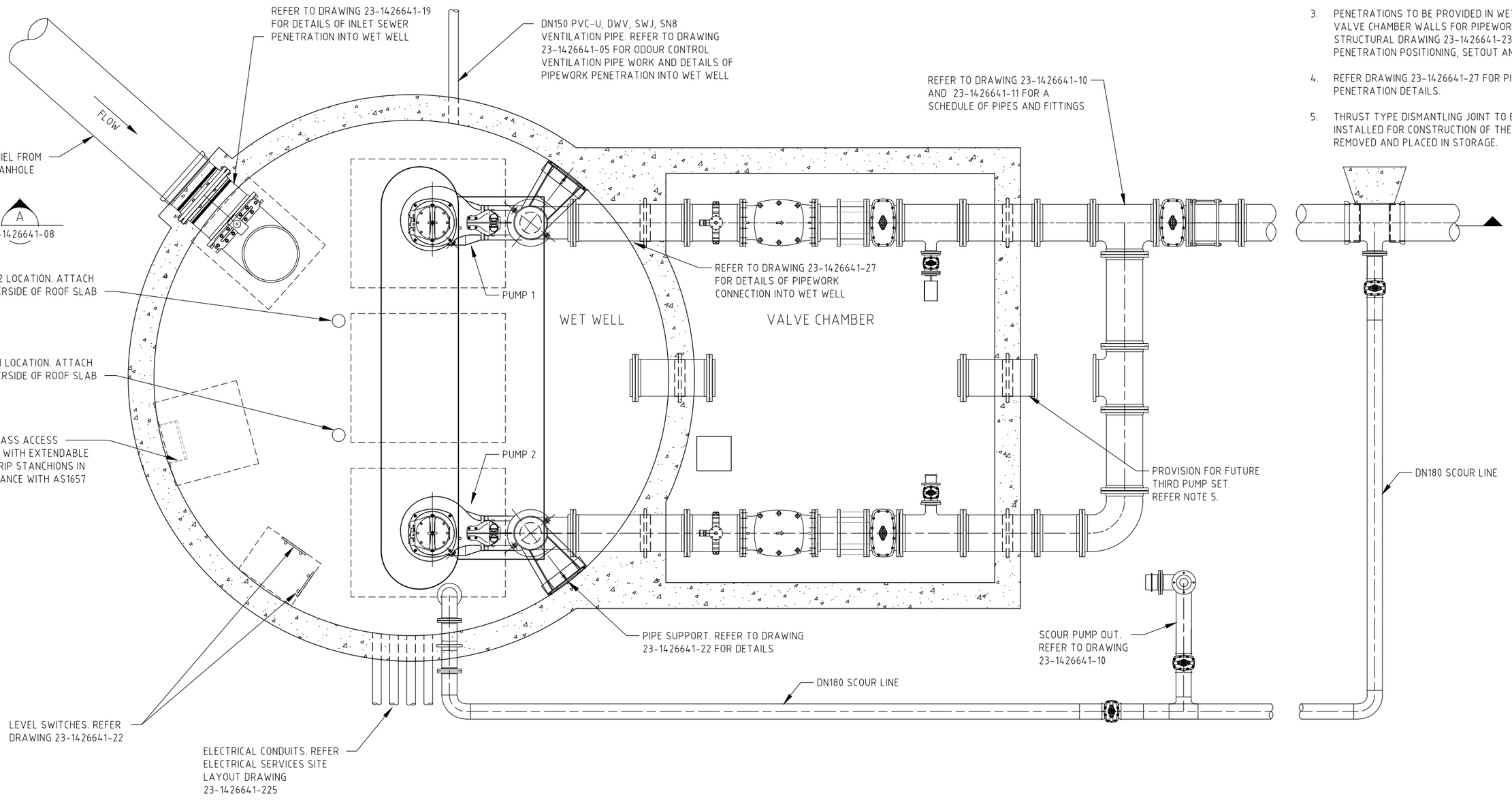

PLAN
SCALE 1:50

0 0.5 1.0 1.5 2.0
0.5 0
HORIZONTAL SCALE 1:50

No.	REVISION DETAILS	DWN	DATE
0	ISSUED FOR TENDER	RK	16.04.21

CONSULTANT DETAILS:
GHD
2/57 Graham Street
Nowra NSW 2541
T 61 2 4424 4900 F 61 2 4424 4999
www.ghd.com

CONSULT. REFERENCE No.
23-14266-41-07

Shoalhaven Water
A Group of Shoalhaven City Council

DESIGNED: ET	DATE: 30.07.14	COMPANY: GHD	
DRAWN: JL	DATE: 30.07.14	COMPANY: GHD	
CHECKED: MS	DATE: 16.04.21	COMPANY: GHD	
APPROVED: CS	DATE: 16.04.21	COMPANY: GHD	

TITLE:
SHOALHAVEN WATER
ST ANNS PUMPING STATION UPGRADE

SPS 3 GENERAL ARRANGEMENT
WITH ROOF REMOVED

SIZE:	SCALE:	INDEX No.	DRAWING No.	SHEET	REV No.
A3	1:50		23-1426641-07		0

Plot Date: 15/04/21 - 15:41 Cad File: N:\AU\Wollongong\Projects\23\12540351\CADD\Drawings\St Anns\23-1426641-07.dwg

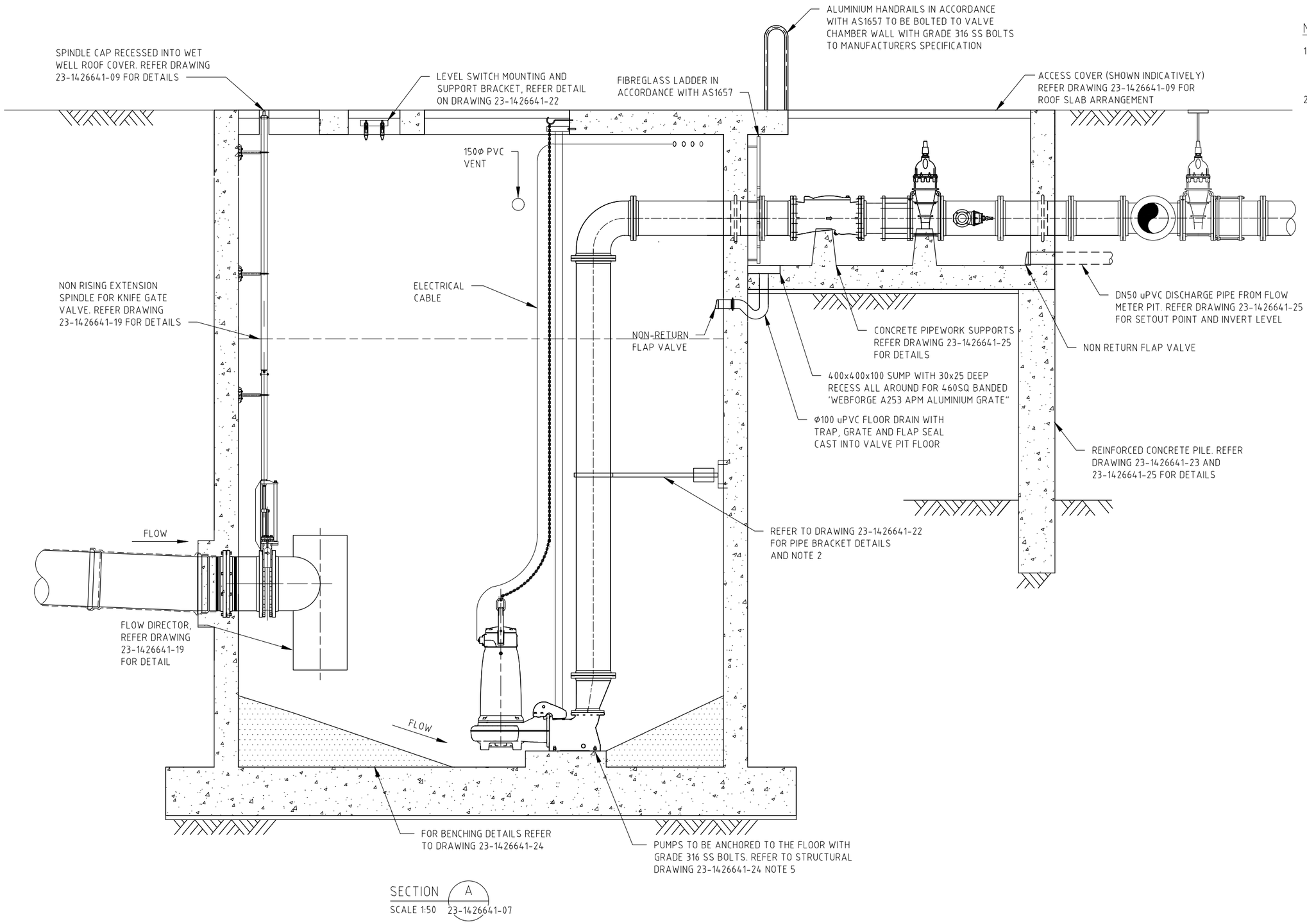

SECTION A
SCALE 1:50 23-1426641-07

NOTE:

1. REFER TO LEVELS AND CAPACITY DIAGRAM ON DRAWING 23-1426641-06 FOR DUTY AND ALARM LEVELS.
2. PIPE BRACKET TO SECURE THE PIPE CENTRALLY MID WAY ALONG ITS LENGTH.

0 0.5 1.0 1.5 2.0
0.5 0
HORIZONTAL SCALE 1:50

No.	REVISION DETAILS	DWN	DATE
0	ISSUED FOR TENDER	RK	16.04.21

CONSULTANT DETAILS:
GHD
2/57 Graham Street
Nowra NSW 2541
T 61 2 4424 4900 F 61 2 4424 4999
www.ghd.com

CONSULT. REFERENCE No. 23-14266-41-08

Shoalhaven Water
A Group of Shoalhaven City Council

DESIGNED: ET	DATE: 30.07.14	COMPANY: GHD	
DRAWN: KDM	DATE: 30.07.14	COMPANY: GHD	
CHECKED: MS	DATE: 01.04.21	COMPANY: GHD	
APPROVED: CS	DATE: 16.04.21	COMPANY: GHD	

TITLE:
SHOALHAVEN WATER
ST ANNS PUMPING STATION UPGRADE

SPS 3 GENERAL ARRANGEMENT
SECTIONAL ELEVATION

SIZE	SCALE	INDEX No.	DRAWING No.	SHEET	REV No.
A3	1:50		23-1426641-08		0

Plot Date: 15/04/21 - 00:19 Cad File: C:\CAD\temp\AcPublish_811544\23-1426641-08.dwg

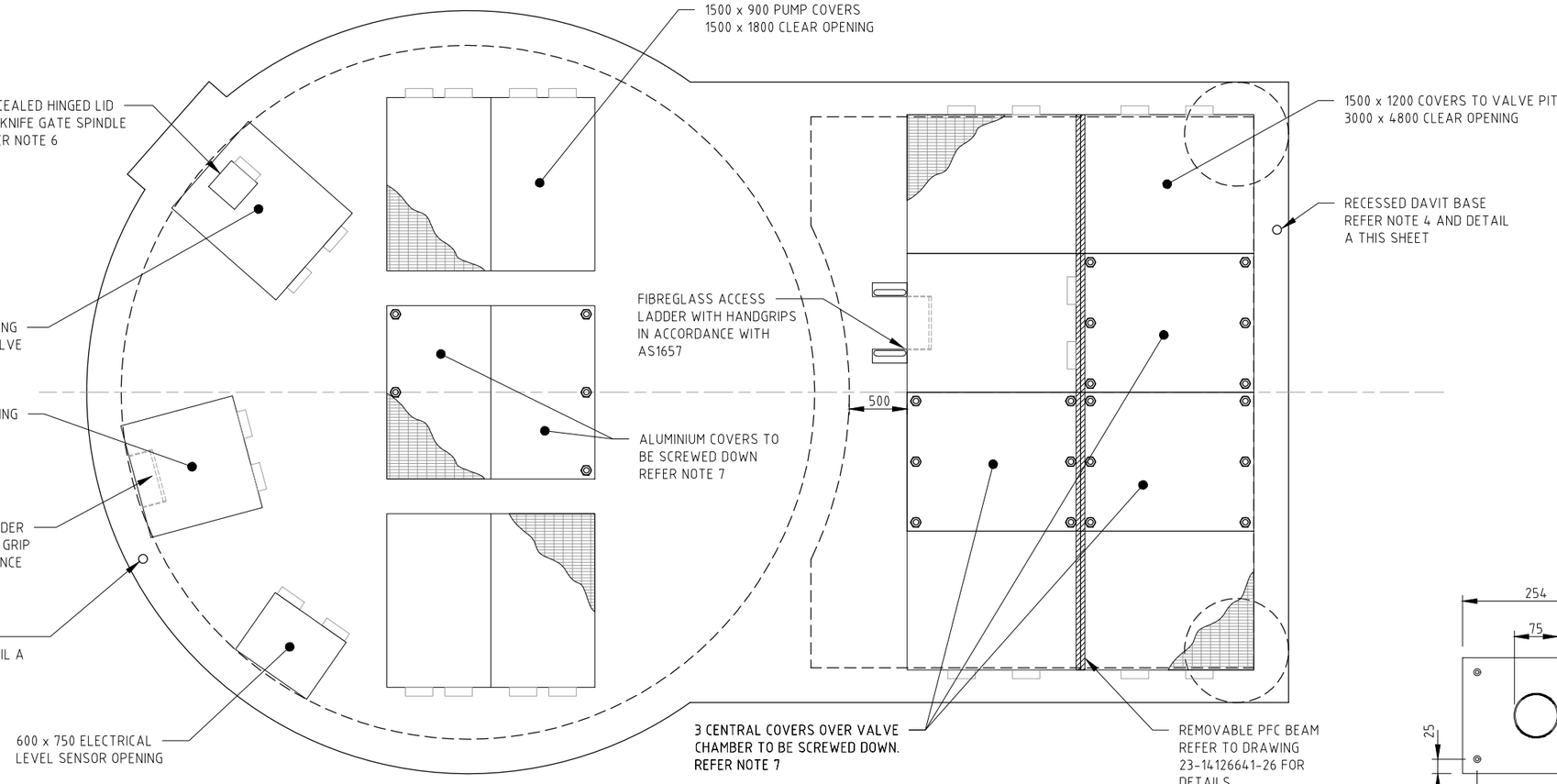

PLAN
SCALE 1:50

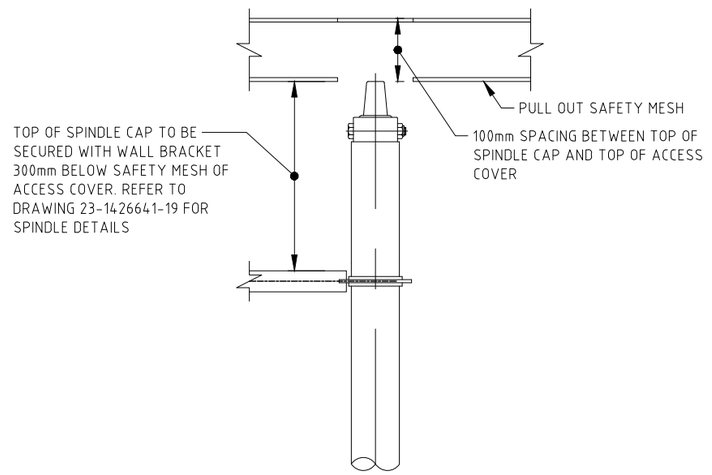

SPINDLE ACCESS DETAIL
SCALE 1:10

NOTES:

1. ALL ACCESS COVERS TO BE McBERNS LFVP - 4 SIDE VOID PROTECTION OR APPROVED EQUIVALENT. ACCESS COVERS SHALL HAVE AN ODOUR SEAL AND PULL OUT SAFETY MESH UNDERNEATH. COVERS SHALL HAVE THE CAPABILITY TO BE SECURED IN PLACE WHEN OPEN.
2. ACCESS COVERS TO BE FLUSH MOUNTED WITH LOW PROFILE HINGES AND CONCEALED LOCK BOXES WITH STANDARD KEY ENTRY. COVERS TO BE FINISHED WITH NON SLIP GREEN RUBBER COATING.
3. ACCESS COVER DIMENSIONS SHOWN ON THIS DRAWING ARE 'CLEAR OPENING' DIMENSIONS UNLESS OTHERWISE SPECIFIED.
4. DAVITS SHALL BE RECESSED 'DE SALA' OR EQUIVALENT, REFER DETAIL A.
5. REFER TO STRUCTURAL DRAWING 23-1426641-26 FOR ACCESS COVER SETOUTS AND PFC BEAM DETAILS AND FIXING.
6. CONCEALED LOCKABLE HINGE LID TO BE PROVIDED FOR ACCESS TO SPINDLE CAPS. SAFETY MESH TO CONTAIN A VOID TO ALLOW SPINDLE TO EXTEND TO UNDERSIDE OF ALUMINIUM COVER.
7. SCREW DOWN ACCESS COVERS TO BE SECURED IN PLACE AS PER MANUFACTURERS REQUIREMENTS.
8. FRAMES FOR ACCESS COVERS TO BE FIXED TO WET WELL AND VALVE CHAMBER AS PER MANUFACTURERS REQUIREMENTS.

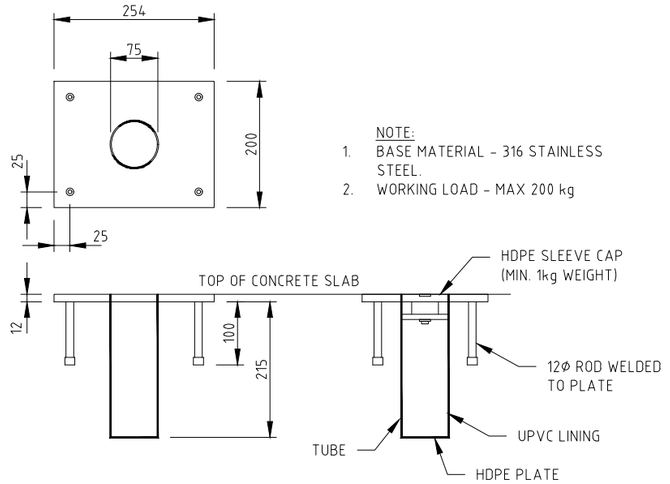

NOTE:
1. BASE MATERIAL - 316 STAINLESS STEEL.
2. WORKING LOAD - MAX 200 kg

DAVIT BASE DETAIL

DETAIL A
SCALE 1:10

HORIZONTAL SCALE 1:50

HORIZONTAL SCALE 1:10

No.	REVISION DETAILS	DWN	DATE
0	ISSUED FOR TENDER	RK	16.04.21

CONSULTANT DETAILS:
GHD
2/57 Graham Street
Nowra NSW 2541
T 61 2 4424 4900 F 61 2 4424 4999
www.ghd.com

CONSULT. REFERENCE No. 23-14266-41-09

Shoalhaven Water
A Group of Shoalhaven City Council

DESIGNED: ET	DATE: 30.07.14	COMPANY: GHD	
DRAWN: JL/AK	DATE: 30.07.14	COMPANY: GHD	
CHECKED: MS	DATE: 16.04.21	COMPANY: GHD	
APPROVED: CS	DATE: 16.04.21	COMPANY: GHD	

TITLE:
SHOALHAVEN WATER
ST ANNS PUMPING STATION UPGRADE

SPS 3 GENERAL ARRANGEMENT
WITH ROOF SLAB

SIZE	SCALE	INDEX No.	DRAWING No.	SHEET	REV No.
A3	1:10 1:50		23-1426641-09		0

Plot Date: 15/04/21 - 00:19 Cad File: C:\CAD\temp\AcPublish_811544\23-1426641-09.dwg

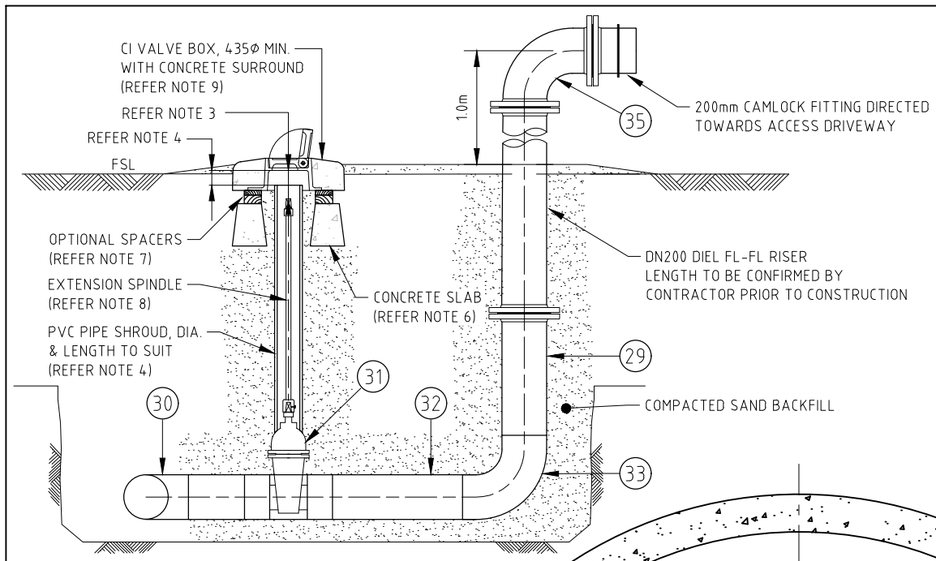

SECTION B
NOT TO SCALE
B
-

A
23-1426641-11

NOTES:

1. PORTABLE PRESSURE GAUGE TO BE KEPT IN SPS03 SWITCH ROOM.
2. REFER TO 23-1426641-11 FOR PIPE AND FITTINGS SCHEDULE.
3. BOX, COVER, SHROUD AND FOOTING TO BE INSTALLED BETWEEN 100 AND 200mm ABOVE THE SPINDLE, CAMLOCK AND PVC PIPE SHROUD SO THAT NO LOADING IS TRANSMITTED TO THE MAIN.
4. PVC PIPE SHROUD TO EXTEND TO WITHIN VALVE BOX, BUT NOT LESS THAN 50mm FROM THE UNDER SIDE OF THE LID.
5. VALVE SURFACE BOX HINGED COVER TO CLOSE IN THE DIRECTION OF FALL OF LAND OR DIRECTION OF ADJACENT ROAD LANE TRAFFIC.
6. CONCRETE FOOTINGS REQUIRED TO BED THE VALVE BOXES AND SHROUD.
7. RECYCLED PLASTIC, CONCRETE OR HARDWOOD SPACERS MAY BE USED TO RAISE FRAME SURFACE LEVEL.
8. EXTENSION SPINDLE REQUIRED WHERE DEPTH FROM F.S.L. TO TOP OF GATE VALVE EXCEEDS 350mm.
9. TOP OF VALVE BOXES TO FINISH 50mm ABOVE FSL. ANY ADDITIONAL FILL TO RAMP AWAY AND TIE INTO FSL.

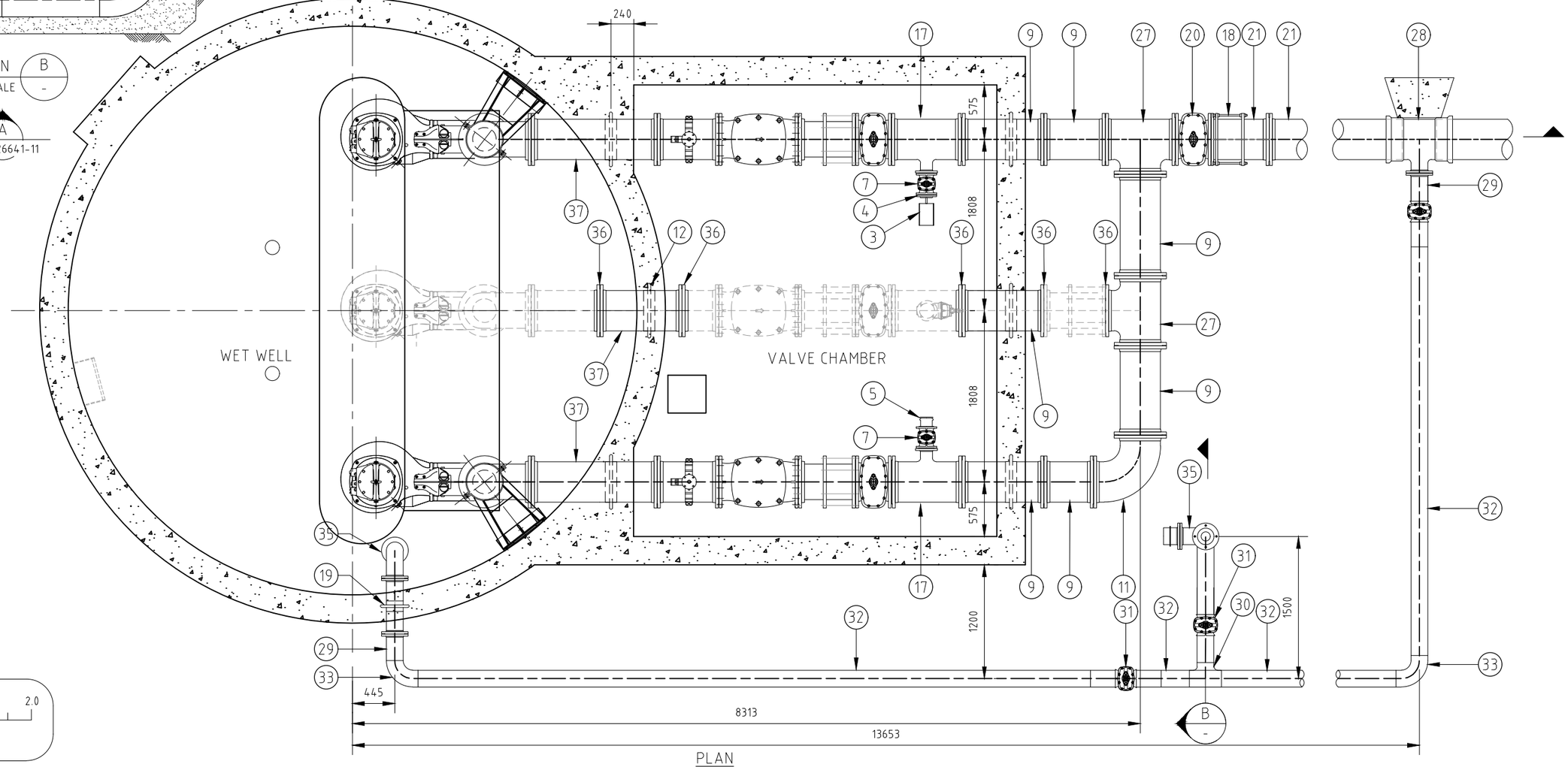

PLAN
SCALE 1:50

HORIZONTAL SCALE 1:50

No.	REVISION DETAILS	DWN	DATE
0	ISSUED FOR TENDER	RK	16.04.21

CONSULTANT DETAILS:
GHD
2/57 Graham Street
Nowra NSW 2541
T 61 2 4424 4900 F 61 2 4424 4999
www.ghd.com

CONSULT. REFERENCE No.
23-14266-41-10

Shoalhaven Water
A Group of Shoalhaven City Council

DESIGNED: ET	DATE: 30.07.14	COMPANY: GHD	
DRAWN: JL	DATE: 30.07.14	COMPANY: GHD	
CHECKED: MS	DATE: 16.04.21	COMPANY: GHD	
APPROVED: CS	DATE: 16.04.21	COMPANY: GHD	

TITLE:
SHOALHAVEN WATER
ST ANNS PUMPING STATION UPGRADE

SPS 3 SCHEDULE OF PIPES AND FITTINGS - PLAN
PUMP OUT DETAIL

SIZE	SCALE	INDEX No.	DRAWING No.	SHEET	REV No.
A3	1:25 1:50		23-1426641-10		0

Plot Date: 15/04/21 - 15:47 Cad File: N:\AU\Wollongong\Projects\23\12540351\CADD\Drawings\St Anns\23-1426641-10.dwg

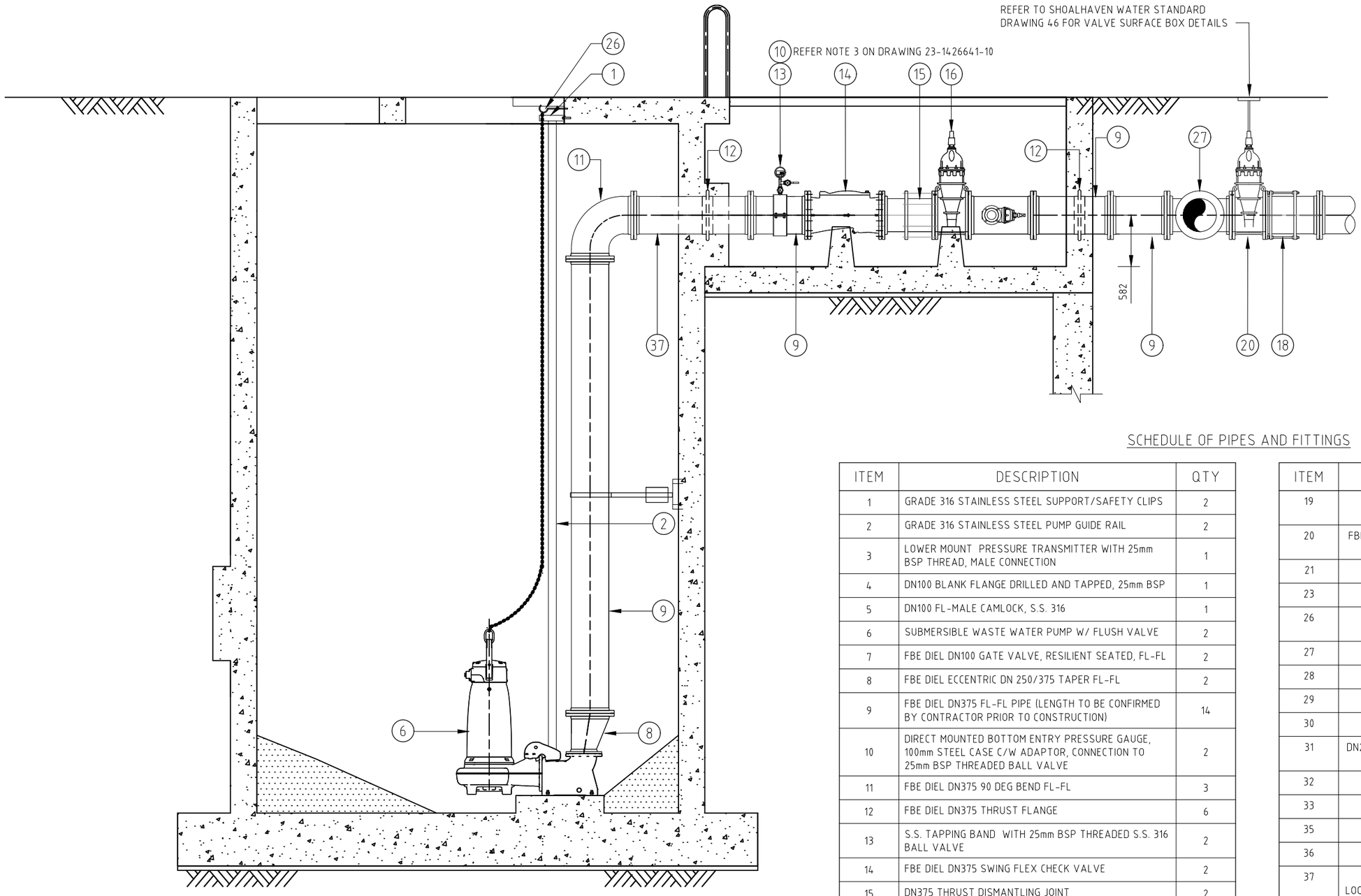

SECTION A
SCALE 1:50 23-1426641-10

0 0.5 1.0 1.5 2.0
0.5 0
HORIZONTAL SCALE 1:50

SCHEDULE OF PIPES AND FITTINGS

ITEM	DESCRIPTION	QTY
1	GRADE 316 STAINLESS STEEL SUPPORT/SAFETY CLIPS	2
2	GRADE 316 STAINLESS STEEL PUMP GUIDE RAIL	2
3	LOWER MOUNT PRESSURE TRANSMITTER WITH 25mm BSP THREAD, MALE CONNECTION	1
4	DN100 BLANK FLANGE DRILLED AND TAPPED, 25mm BSP	1
5	DN100 FL-MALE CAMLOCK, S.S. 316	1
6	SUBMERSIBLE WASTE WATER PUMP W/ FLUSH VALVE	2
7	FBE DIEL DN100 GATE VALVE, RESILIENT SEATED, FL-FL	2
8	FBE DIEL ECCENTRIC DN 250/375 TAPER FL-FL	2
9	FBE DIEL DN375 FL-FL PIPE (LENGTH TO BE CONFIRMED BY CONTRACTOR PRIOR TO CONSTRUCTION)	14
10	DIRECT MOUNTED BOTTOM ENTRY PRESSURE GAUGE, 100mm STEEL CASE C/W ADAPTOR, CONNECTION TO 25mm BSP THREADED BALL VALVE	2
11	FBE DIEL DN375 90 DEG BEND FL-FL	3
12	FBE DIEL DN375 THRUST FLANGE	6
13	S.S. TAPPING BAND WITH 25mm BSP THREADED S.S. 316 BALL VALVE	2
14	FBE DIEL DN375 SWING FLEX CHECK VALVE	2
15	DN375 THRUST DISMANTLING JOINT	2
16	FBE DIEL DN375 RESILIENT SEATED SLUICE VALVE FL-FL	2
17	FBE DIEL DN375 x 100 TEE FL-FL	2
18	DN375 NON THRUST DISMANTLING JOINT	1

ITEM	DESCRIPTION	QTY
19	FBE DIEL DN200 FL-FL PIPE C/W PUDDLE FLANGE	1
20	FBE DIEL DN375 RESILIENT SEATED GATE VALVE FL-FL WITH SURFACE BOX	1
21	FBE DIEL DN375 FL-SP	2
23	FBE DIEL DN375 SP-SO	1
26	GRADE 316 STAINLESS STEEL CHAIN HOOK TO MANUFACTURERS SPECIFICATION	2
27	DI FBE DIEL DN375 FL TEE	2
28	DI FBE DIEL DN375 x 200 SCOUR TEE SOC-SOC-FL	1
29	DN200 PE 100 PN 16 WITH FLANGE BACKING RING	2
30	DN200 PE 100 PN 16 TEE, BUTT WELDED	1
31	DN200 RESILIENT SEATED GATE VALVE , BUTT WELDED. POLY ENDED	2
32	DN200 PE 100 PN 16, BUTT WELDED	4
33	DN200 PE 100 PN16, 90 DEG BEND, BUTT WELDED	2
35	FBE DIEL DN200 FL-FL 90 DEG BEND	1
36	FBE DIEL DN375 BLANK FLANGE	5
37	SS316 DN375 FL-FL PIPE C/W PUDDLE FLANGE LOCATED CENTRALLY WITHIN WALL (PIPE LENGTH TO BE CONFIRMED BY CONTRACTOR PRIOR TO CONSTRUCTION)	3

No.	REVISION DETAILS	DWN	DATE
0	ISSUED FOR TENDER	RK	16.04.21

CONSULTANT DETAILS:
GHD
2/57 Graham Street
Nowra NSW 2541
T 61 2 4424 4900 F 61 2 4424 4999
www.ghd.com

CONSULT. REFERENCE No. 23-14266-41-11

Shoalhaven Water
A Group of Shoalhaven City Council

DESIGNED: ET	DATE: 30.07.14	COMPANY: GHD	
DRAWN: KDM	DATE: 30.07.14	COMPANY: GHD	
CHECKED: MS	DATE: 09.04.21	COMPANY: GHD	
APPROVED: CS	DATE: 16.04.21	COMPANY: GHD	

TITLE:
SHOALHAVEN WATER
ST ANNS PUMPING STATION UPGRADE

SPS 3 SCHEDULE OF PIPES AND FITTINGS
SECTIONAL ELEVATION

SIZE	SCALE	INDEX No.	DRAWING No.	SHEET	REV No.
A3	1:50		23-1426641-11		0

Plot Date: 15/04/21 - 15:50 Cad File: N:\AU\Wollongong\Projects\23\12540351\CADD\Drawings\St Anns\23-1426641-11.dwg

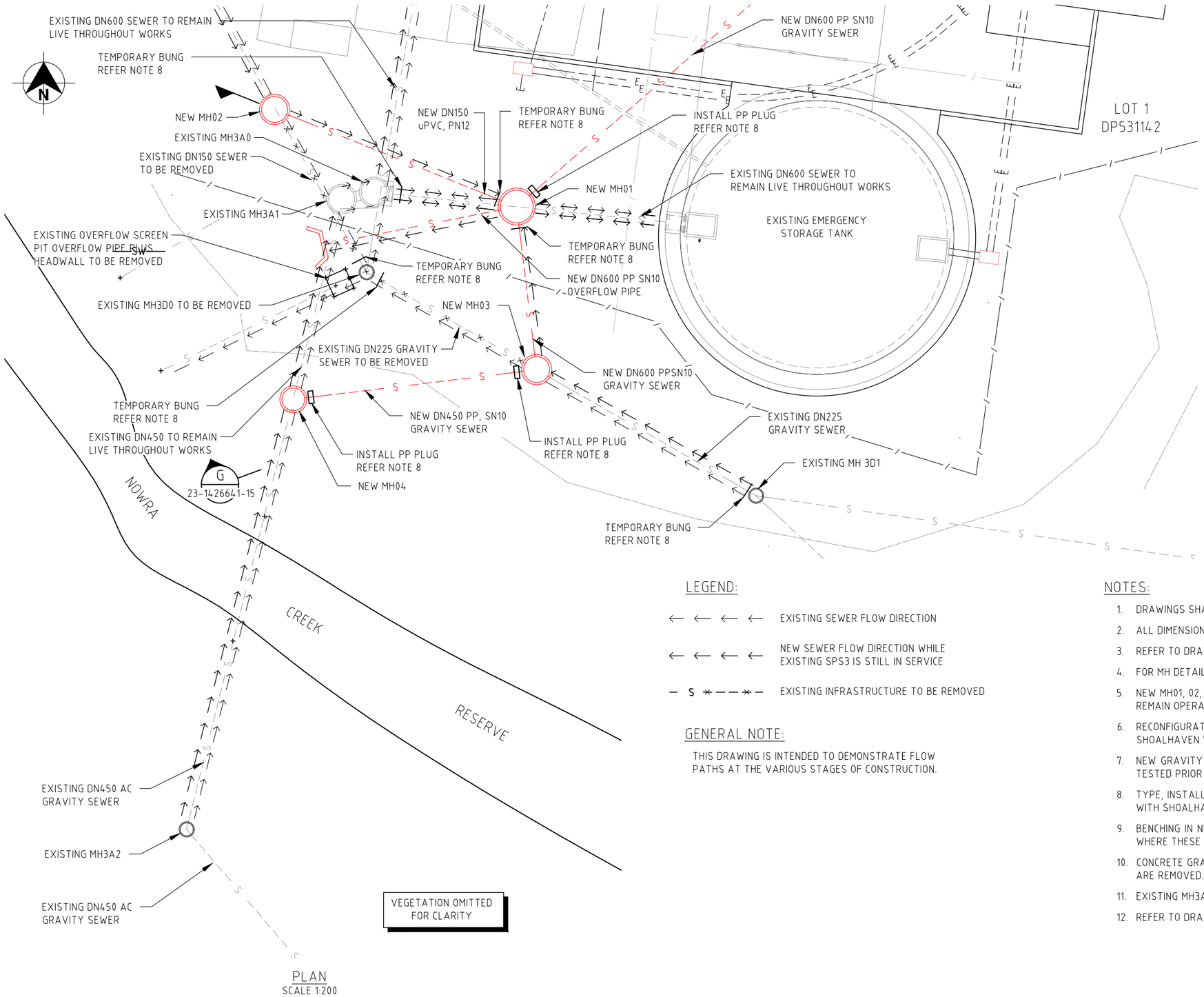

PLAN
SCALE 1:200

LEGEND:

- ← ← ← ← EXISTING SEWER FLOW DIRECTION
- ← ← ← ← NEW SEWER FLOW DIRECTION WHILE EXISTING SPS3 IS STILL IN SERVICE
- — S — — EXISTING INFRASTRUCTURE TO BE REMOVED

GENERAL NOTE:

THIS DRAWING IS INTENDED TO DEMONSTRATE FLOW PATHS AT THE VARIOUS STAGES OF CONSTRUCTION.

NOTES:

1. DRAWINGS SHALL NOT BE SCALED.
2. ALL DIMENSIONS ARE IN MILLIMETRES UNLESS OTHERWISE SPECIFIED.
3. REFER TO DRAWING 23-1426641-05 FOR NEW MANHOLE SETOUT POINTS.
4. FOR MH DETAILS REFER TO SHOALHAVEN WATER STANDARD DRAWINGS; SEW-1300SW, 1302SW, 1303SW.
5. NEW MH01, 02, 03 AND 04 TO BE CONSTRUCTED OVER EXISTING SEWER LINE AND ALL EXISTING SEWER LINES TO REMAIN OPERATIONAL DURING NEW MH CONSTRUCTION.
6. RECONFIGURATION OF NEW SEWER NETWORK AND INSTALLATION OF NEW MANHOLES TO BE CO-ORDINATED WITH SHOALHAVEN WATER.
7. NEW GRAVITY SEWER LINES BETWEEN NEW SPS3, MH01, MH02, MH03 AND OVERFLOW SHALL BE ACCEPTANCE TESTED PRIOR TO CUT OVER WORKS.
8. TYPE, INSTALLATION AND REMOVAL OF WATER TIGHT TEMPORARY BUNGS OR PLUGS SHALL BE CO-ORDINATED WITH SHOALHAVEN WATER.
9. BENCHING IN NEW MH SHALL BE FORMED FOR FUTURE FLOW ROUTES AND AROUND EXISTING GRAVITY SEWERS WHERE THESE PASS THROUGH THE NEW MH's. USE 2:1 SAND:CEMENT MORTAR FOR BENCHING.
10. CONCRETE GRADE N20 SHALL BE USED TO FILL IN VOIDS IN NEW MANHOLES LEFT WHEN EXISTING SEWER LINES ARE REMOVED.
11. EXISTING MH3A0 AND MH3A1 TO REMAIN LIVE THROUGHOUT CONSTRUCTION WORKS.
12. REFER TO DRAWING No. 23-1426641-14 FOR OVERFLOW ARRANGEMENT AND BANK REGRADING DETAILS.

0 2.0 4.0 6.0 8.0
2.0 0
HORIZONTAL SCALE 1:200

No.	REVISION DETAILS	DWN	DATE
0	ISSUED FOR TENDER	RK	16.04.21

CONSULTANT DETAILS:
GHD
2/57 Graham Street
Nowra NSW 2541
T 61 2 4424 4900 F 61 2 4424 4999
www.ghd.com

CONSULT. REFERENCE No.
23-14266-41-12

Shoalhaven Water
A Group of Shoalhaven City Council

DESIGNED: ET	DATE: 30.07.14	COMPANY: GHD	
DRAWN: JL	DATE: 30.07.14	COMPANY: GHD	
CHECKED: MS	DATE: 01.04.21	COMPANY: GHD	
APPROVED: CS	DATE: 16.04.21	COMPANY: GHD	

TITLE:
SHOALHAVEN WATER
ST ANNS PUMPING STATION UPGRADE

GRAVITY SEWER AND OVERFLOW ARRANGEMENT CONSTRUCTION

SIZE	SCALE	INDEX No.	DRAWING No.	SHEET	REV No.
A3	1:200		23-1426641-12		0

Plot Date: 15/04/21 - 00:20 Cad File: C:\CAD\temp\AcPublish_811544\23-1426641-12.dwg

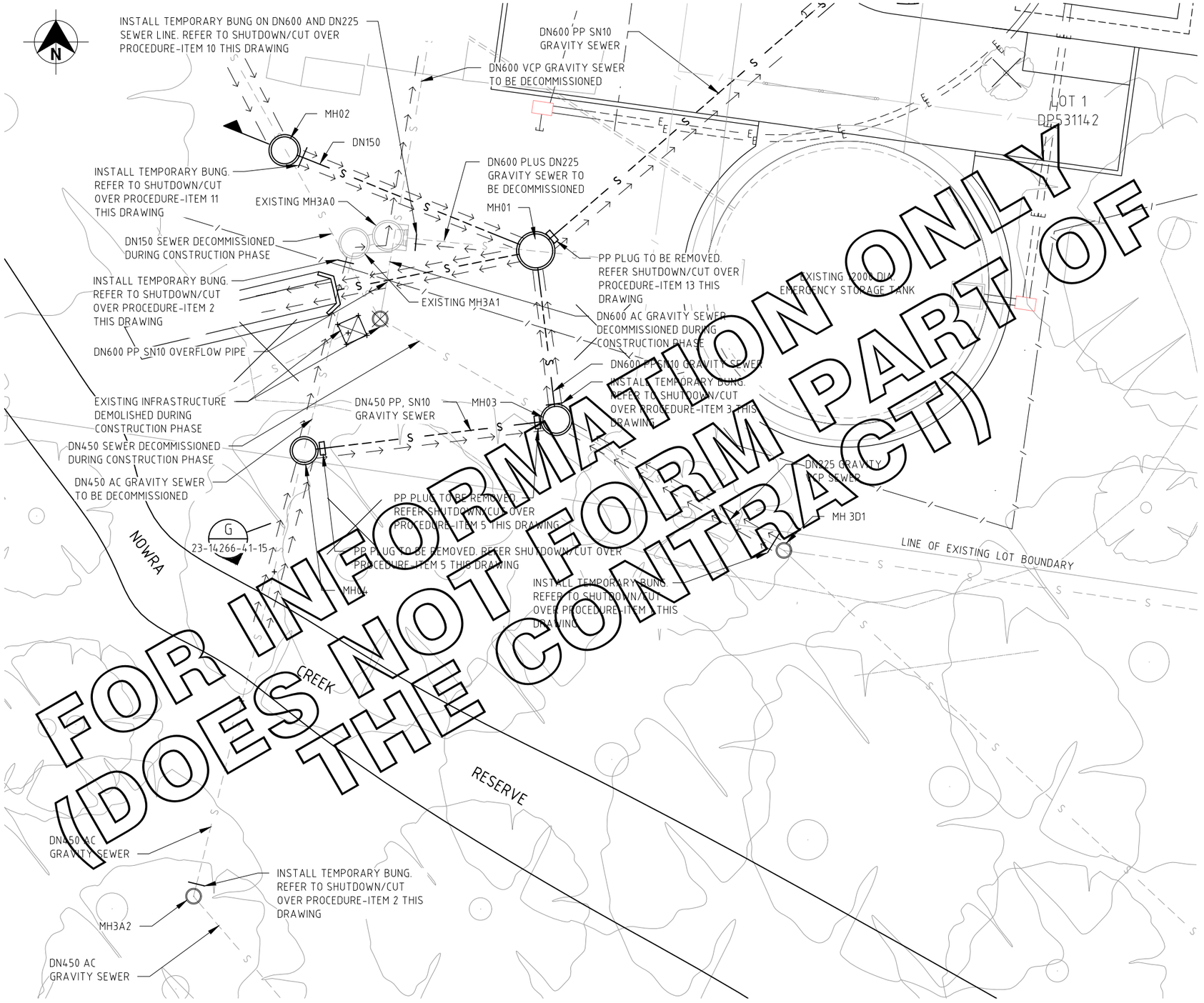

FOR INFORMATION ONLY
(DOES NOT FORM PART OF THE CONTRACT)

PLAN
SCALE 1:200

SHUTDOWN/CUT OVER PROCEDURE:

WORKS LISTED BELOW ARE TO COMMENCE TO ENABLE THE NEW SPS3 TO BE BROUGHT ONLINE.

1. INSTALL A TEMPORARY BUNG IN MH3D1 ON THE DN225 LEADING TO MH03.
2. INSTALL A TEMPORARY BUNG IN MH3A2 AND MH3A1 ON THE DN450 LEADING TO MH04.
3. INSTALL TEMPORARY BUNG IN MH03 ON THE DN600 GRAVITY SEWER LINE AT LEADING TO MH01.
4. SET UP AN OVER PUMPING ARRANGEMENT FROM MH3A2 INTO MH3A1 AND MH3D1 INTO MH01. TIMING OF BUNG INSTALLATION AND SETTING UP OF AN OVER PUMPING ARRANGEMENT TO CONSIDER WET WEATHER EVENTS.
5. REMOVE PP PLUG FROM MH04 AND MH03 ON DN450 LINE.
6. BREAKOUT EXISTING DN450 PIPE PASSING THOUGH MH04 AND REMOVE DEBRIS FROM INSIDE MH04. CONCRETE IN DN450 HOLE IN MH04 LEADING TO MH3A1 AND MAKE GOOD BENCHING TO ALLOW FLOWS FROM MH04 TO PASS THROUGH MH03.
7. AFTER CONCRETE AND BENCHING IN MH04 HAS SET REMOVE TEMPORARY BUNGS IN MH3A1, MH3A2 AND MH3D1. BUNG IN MH03 IS TO REMAIN IN PLACE.
8. SET UP OVER PUMPING ARRANGEMENT FROM MH03 INTO MH3A0. TIMING OF BUNG INSTALLATION AND SETTING UP OF AN OVER PUMPING ARRANGEMENT TO CONSIDER WET WEATHER EVENTS.
9. REMOVE THE OVER PUMPING ARRANGMENT FROM MH3A2 INTO MH3A1, AND MH3D1 INTO MH01.
10. INSTALL TEMPORARY BUNG ON DN600 AND DN225 GRAVITY SEWER LINE AT MH3A0 LEADING TO MH01. ENSURE EMERGENCY STORAGE TANK IS EMPTY PRIOR TO INSTALLATION OF THE 2 BUNGS.
11. INSTALL TEMPORARY BUNG ON DN150 GRAVITY SEWER LINE AT MH02 LEADING TO MH01.
12. SET UP AN OVER PUMPING ARRANGEMENT FROM MH02 INTO MH3A0. TIMING OF BUNG INSTALLATION AND SETTING UP OF AN OVER PUMPING ARRANGEMENT TO CONSIDER WET WEATHER EVENTS.
13. REMOVE PP PLUG FROM MH01 ON DN600 LINE LEADING TO THE NEW SPS3.
14. CONCRETE IN DN225 AND DN600 HOLE IN MH01 LEADING TO MH3A0. MAKE GOOD BENCHING TO ALLOW FLOWS FROM MH02 AND MH03 TO PASS THROUGH MH01 TO NEW SPS3.
15. AFTER CONCRETE AND BENCHING IN MH01 HAS SET REMOVE TEMPORARY BUNGS IN MH02, MH03 AND MH3A0.
16. REMOVE THE OVER PUMPING ARRANGMENT FROM MH02 AND MH03 INTO MH3A0 .

NOTES:

1. DRAWINGS SHALL NOT BE SCALED.
2. ALL DIMENSIONS ARE IN MILLIMETRES UNLESS OTHERWISE SPECIFIED.
3. CUT OVER TO NEW SPS3 REQUIRES REARRANGING GRAVITY SEWER FLOWS FROM CURRENT FLOW ROUTE DEFINED BY THIN ARROWS TO NEW FLOW ROUTE DEFINED BY BOLD ARROWS.

LEGEND:

⟵ ⟵ ⟵ CURRENT SEWER FLOW ROUTE

⟵ ⟵ ⟵ NEW SEWER FLOW ROUTE

0 2.0 4.0 6.0 8.0
2.0 0
HORIZONTAL SCALE 1:200

No.	REVISION DETAILS	DWN	DATE
0	ISSUED FOR TENDER	RK	16.04.21

CONSULTANT DETAILS:
GHD
2/57 Graham Street
Nowra NSW 2541
T 61 2 4424 4900 F 61 2 4424 4999
www.ghd.com

CONSULT. REFERENCE No. 23-14266-41-13

Shoalhaven Water
A Group of Shoalhaven City Council

DESIGNED: ET	DATE: 30.07.14	COMPANY: GHD	
DRAWN: JL	DATE: 30.07.14	COMPANY: GHD	
CHECKED: MS	DATE: 01.04.21	COMPANY: GHD	
APPROVED: CS	DATE: 16.04.21	COMPANY: GHD	

TITLE:
SHOALHAVEN WATER
ST ANNS PUMPING STATION UPGRADE

GRAVITY SEWER AND OVERFLOW ARRANGEMENT
CUT OVER TO NEW SPS3 AND RISING MAIN

SIZE:	SCALE:	INDEX No.	DRAWING No.	SHEET	REV No.
A3	1:200		23-1426641-13		0

Plot Date: 15/04/21 - 00:20 Cad File: C:\CAD\temp\AcPublish_811544\23-1426641-13.dwg

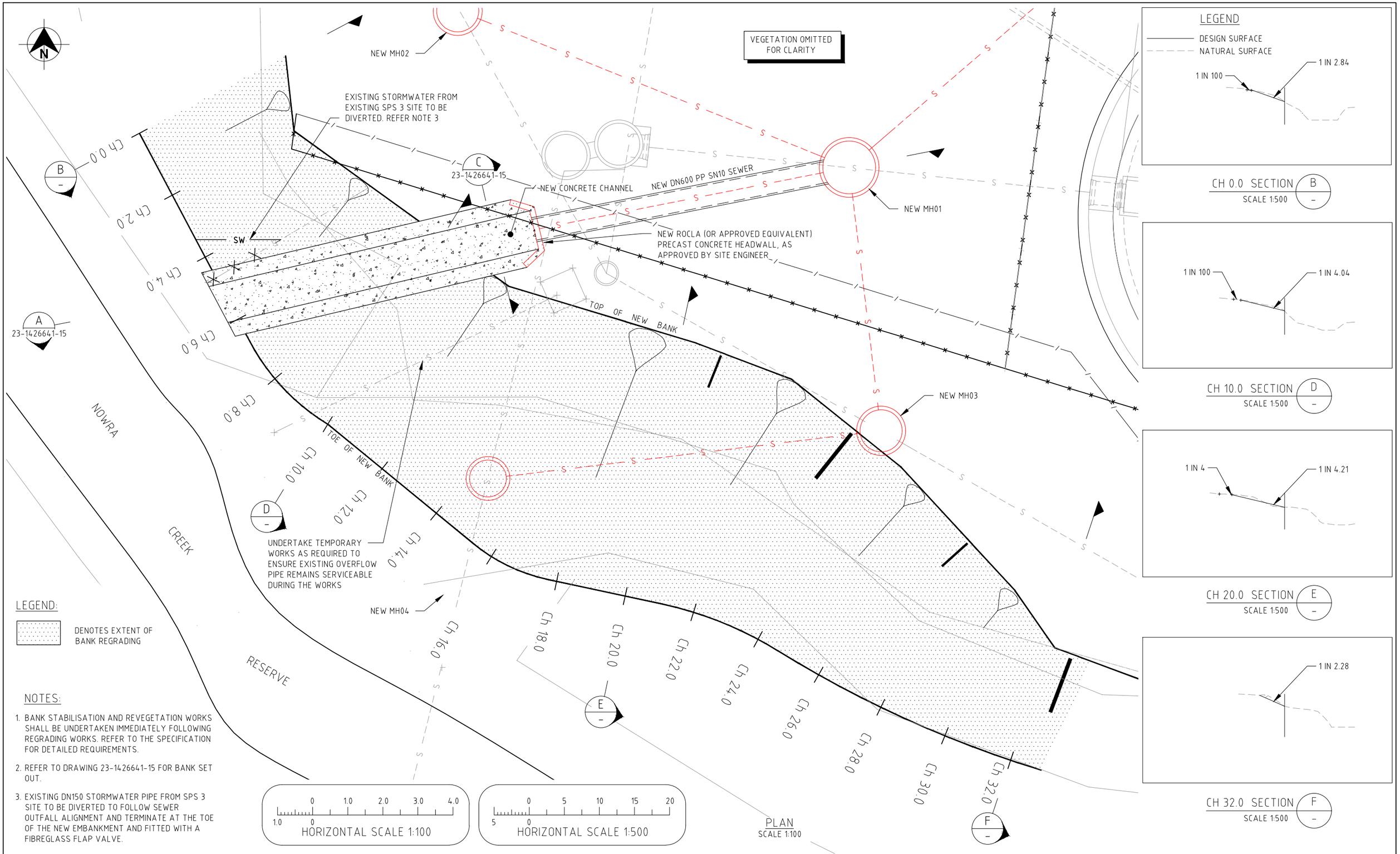

NOTES:

1. BANK STABILISATION AND REVEGETATION WORKS SHALL BE UNDERTAKEN IMMEDIATELY FOLLOWING REGRADING WORKS. REFER TO THE SPECIFICATION FOR DETAILED REQUIREMENTS.
2. REFER TO DRAWING 23-1426641-15 FOR BANK SET OUT.
3. EXISTING DN150 STORMWATER PIPE FROM SPS 3 SITE TO BE DIVERTED TO FOLLOW SEWER OUTFALL ALIGNMENT AND TERMINATE AT THE TOE OF THE NEW EMBANKMENT AND FITTED WITH A FIBREGLASS FLAP VALVE.

No.	REVISION DETAILS	DWN	DATE
0	ISSUED FOR TENDER	RK	16.04.21

CONSULTANT DETAILS:
GHD
2/57 Graham Street
Nowra NSW 2541
T 61 2 4424 4900 F 61 2 4424 4999
www.ghd.com

CONSULT. REFERENCE No.: 23-14266-41-14

Shoalhaven Water
A Group of Shoalhaven City Council

DESIGNED: ET	DATE: 30.07.14	COMPANY: GHD	
DRAWN: JL	DATE: 30.07.14	COMPANY: GHD	
CHECKED: MS	DATE: 01.04.21	COMPANY: GHD	
APPROVED: CS	DATE: 16.04.21	COMPANY: GHD	

TITLE:
SHOALHAVEN WATER
ST ANNS PUMPING STATION UPGRADE

OVERFLOW ARRANGEMENT AND BANK REGRADING PLAN

SIZE	SCALE	INDEX No.	DRAWING No.	SHEET	REV No.
A3	1:100		23-1426641-14		0

Plot Date: 15/04/21 - 00:21 Cad File: C:\CAD\temp\AcPublish_811544\23-1426641-14.dwg

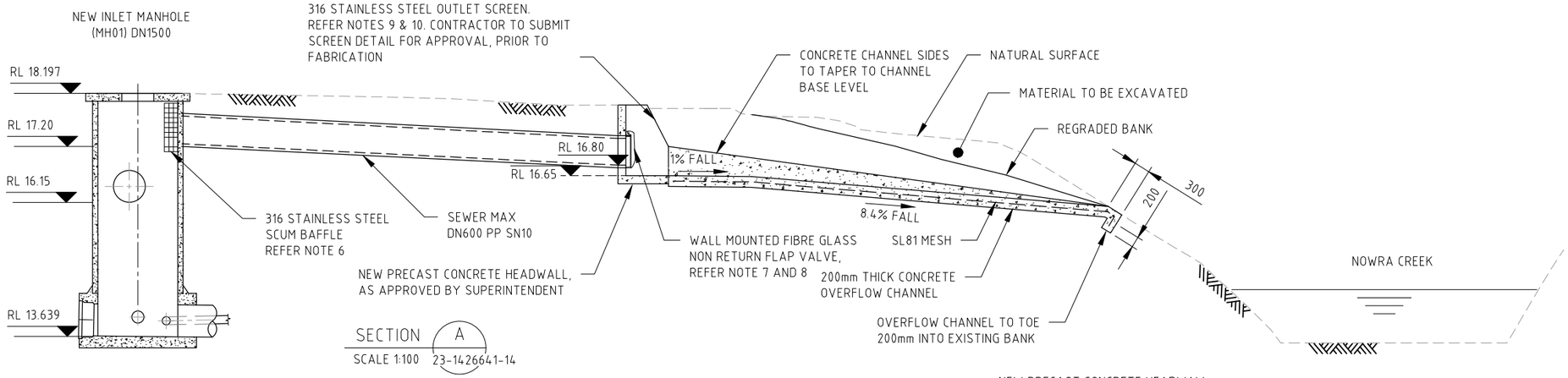

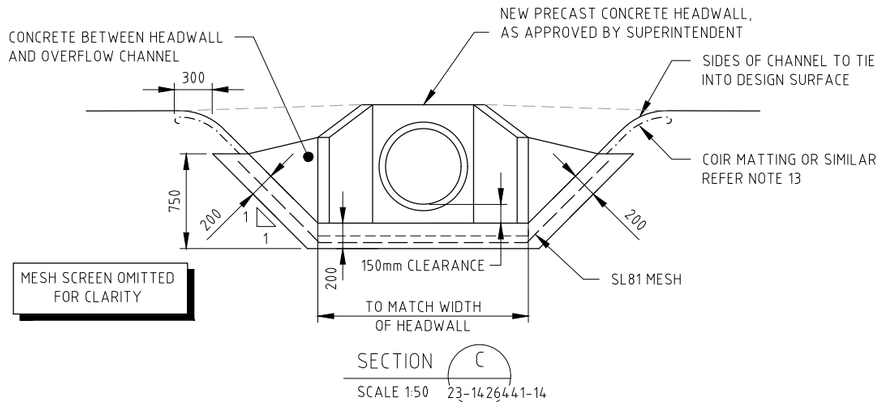

SETOUT TABLE - TOP OF BANK			
CHAINAGE	EASTING	NORTHING	LEVEL
0	280333.01	6137159.15	17.8
6.592	280338.35	6137155.28	17.8
12.183	280343.70	6137153.66	17.8
15.09	280346.42	6137152.63	17.8
19.091	280349.54	6137150.13	17.8
23.881	280352.79	6137146.61	17.8
25.861	280353.92	6137144.98	17.8
28.945	280356.81	6137143.90	17.8
30.591	280358.46	6137143.91	17.8

SETOUT TABLE - TOE OF BANK			
CHAINAGE	EASTING	NORTHING	LEVEL
0	280327.83	6137159.65	16.141
6.723	280330.98	6137153.70	16.058
8.371	280331.77	6137152.21	16.153
10.019	280333.21	6137151.34	16.26
15.359	280337.34	6137147.95	15.419
16.547	280338.28	6137147.18	15.257
17.735	280339.46	6137146.93	15.66
21.085	280342.74	6137146.22	16.121
22.866	280344.49	6137145.84	16.178
24.646	280346.02	6137144.90	16.173
28.784	280349.56	6137142.71	16.363
32.921	280353.54	6137141.49	16.242

NEW MANHOLE SCHEDULE			
NAME	COVER LEVEL (mAHD)	INVERT LEVEL (mAHD)	DIAMETER (mm)
MH01	18.197	13.639	1500
MH02	18.240	13.965	1200
MH03	17.823	13.696	1200
MH04	17.500	13.753	1050

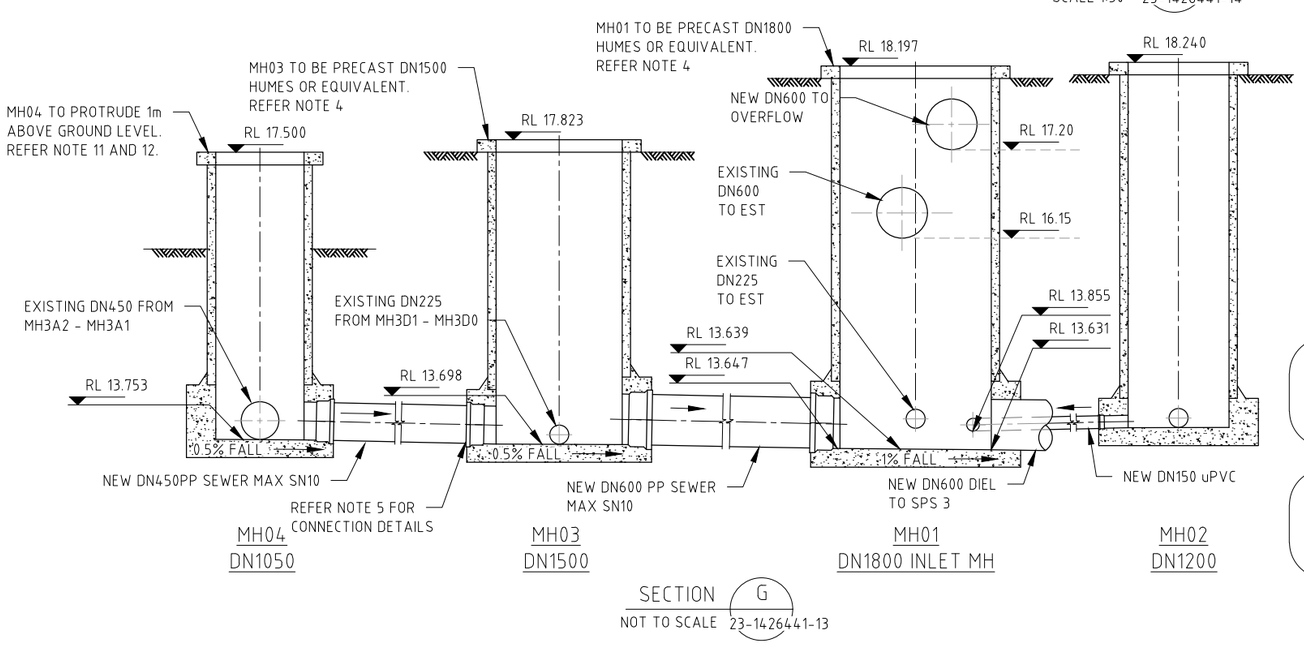

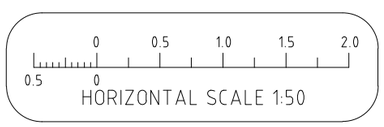

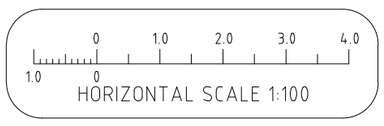

NOTES:

1. DRAWINGS SHALL NOT BE SCALED.
2. ALL DIMENSIONS ARE IN MILLIMETRES UNLESS OTHERWISE SPECIFIED.
3. PP SEWER MAX PIPE TO BE CONNECTED TO INLET MH AND HEADWALL WITH A HYDROTITE WATER SEAL IN ACCORDANCE WITH THE INSTALLATION MANUAL.
4. REFER TO WSA02 STANDARD DRAWING SEW1309 FOR MANHOLE CONSTRUCTION DETAILS AND DIMENSIONS. FOR ALL OTHER SEWER CONSTRUCTION DETAILS REFER TO SHOALHAVEN WATER STANDARD DRAWING SEW-1300SW.
5. PP SEWER MAX. GRAVITY SEWER LINE TO CONNECT TO NEW MH IN ACCORDANCE WITH MANUFACTURERS INSTRUCTIONS AND HYDROTITE SEAL INSTALLED. REFER SHOALHAVEN WATER STANDARD DRAWING SEW-1302SW FOR OTHER PIPE MATERIAL CONNECTION DETAILS.
6. 316 STAINLESS STEEL SCUM BAFFLE TO BE 1200mm DEEP AND PROTRUDE 300mm INTO THE MANHOLE, MEASURED FROM THE WALL OF THE INSIDE MANHOLE WHERE THE OUTFALL PIPE CONNECTS. THE SCUM BAFFLE SHALL BE FIXED SO THAT IT EXTENDS 50mm ABOVE THE TOP OF THE OVERFLOW PIPE. THE BAFFLE SHALL BE FIXED USING STAINLESS STEEL GRADE 316 HEX HEAD BOLTS M16x115 CHEM SET OR SIMILAR AT A MAX. OF 400 CENTRES. CONTRACTOR TO SUBMIT SCUM BAFFLE DETAIL FOR APPROVAL PRIOR TO FABRICATION.
7. FLAP VALVE TO BE FIBRE GLASS, WALL MOUNTED. CAPABLE OF OPENING FOR LOW FLOWS. MIN HEAD REQUIRED TO OPEN TO BE NO GREATER THAN 90mm.
8. FLAP VALVE TO BE INSTALLED IN ACCORDANCE WITH MANUFACTURER'S INSTRUCTION.
9. OUTLET SCREEN TO HAVE 150mm CLEAR SPACING BETWEEN BARS AND BE SET 150mm ABOVE THE INVERT OF THE HEADWALL.
10. OUTLET SCREEN TO HAVE REMOVABLE FEATURE FOR FLAP VALVE MAINTENANCE AND SECURED WITH TAMPER PROOF BOLTS OR SIMILAR.
11. ALL NEW MANHOLES TO BE FITTED WITH CLASS A, CIRCULAR, CAST IRON, SOLID TOP COVERS SUITABLE FOR SEWER APPLICATION. REFER SHOALHAVEN WATER STANDARD DRAWING SEW1308 FOR MANHOLE ACCESS COVER ARRANGEMENT.
12. MH04 TO BE FITTED WITH A BOLT DOWN COVER IN ADDITION TO THE FEATURES STATED IN NOTE 11.
13. COIR MATTING OR SIMILAR TO EXTEND 300mm PAST OVERFLOW CHANNEL AND TIE INTO THE GROUND IN ACCORDANCE WITH MANUFACTURERS INSTALLATION INSTRUCTIONS. WHERE OVERFLOW CHANNEL PASSES THROUGH BANK REGRADED AREA, COIR MATTING SHALL TIE INTO EROSION PROTECTION MATTING USED IN REGRADED AREA.
14. CONCRETE GRADE N20 SHALL BE USED FOR OVERFLOW CHANNEL AND TIE IN SECTION BETWEEN HEADWALL AND OVERFLOW CHANNEL.

No.	REVISION DETAILS	DWN	DATE
0	ISSUED FOR TENDER	RK	16.04.21

CONSULTANT DETAILS:
GHD
2/57 Graham Street
Nowra NSW 2541
T 61 2 4424 4900 F 61 2 4424 4999
www.ghd.com

CONSULT. REFERENCE No. 23-14266-41-15

Shoalhaven Water
A Group of Shoalhaven City Council

DESIGNED: ET	DATE: 30.07.14	COMPANY: GHD	
DRAWN: KDM	DATE: 30.07.14	COMPANY: GHD	
CHECKED: MS	DATE: 01.04.21	COMPANY: GHD	
APPROVED: CS	DATE: 16.04.21	COMPANY: GHD	

TITLE:
SHOALHAVEN WATER
ST ANNS PUMPING STATION UPGRADE

OVERFLOW ARRANGEMENT AND REGRADED BANK SECTIONS

SIZE	SCALE	INDEX No.	DRAWING No.	SHEET	REV No.
A3	AS SHOWN		23-1426641-15		0

Plot Date: 15/04/21 - 00:22 Cad File: C:\CAD\temp\AcPublish_811544\23-1426641-15.dwg

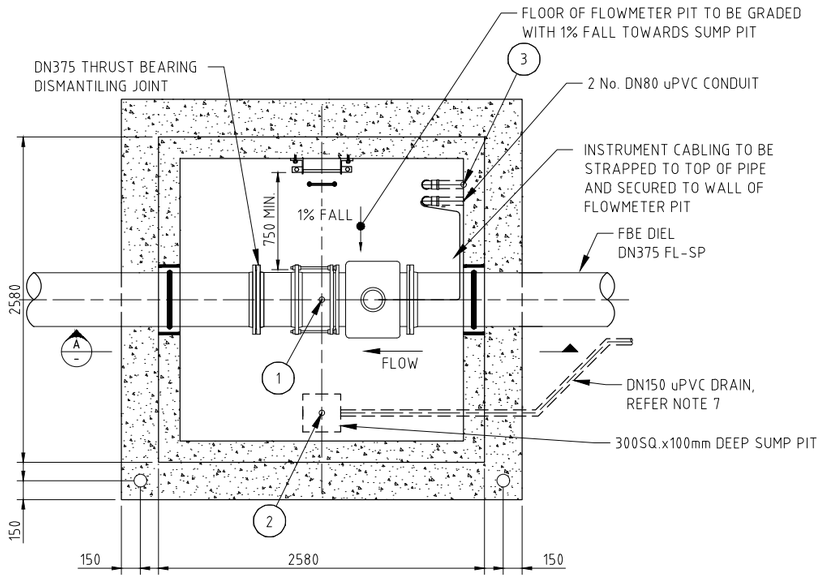

FLOWMETER PIT SETOUT			
POINT	EASTING	NORTHING	DESCRIPTION
1	280364.355	6137184.590	CENTRE OF FLOWMETER PIT
2	280363.466	6137184.712	CENTRE OF SUMP
3	280364.964	6137183.453	ELECTRICAL CONDUIT 1

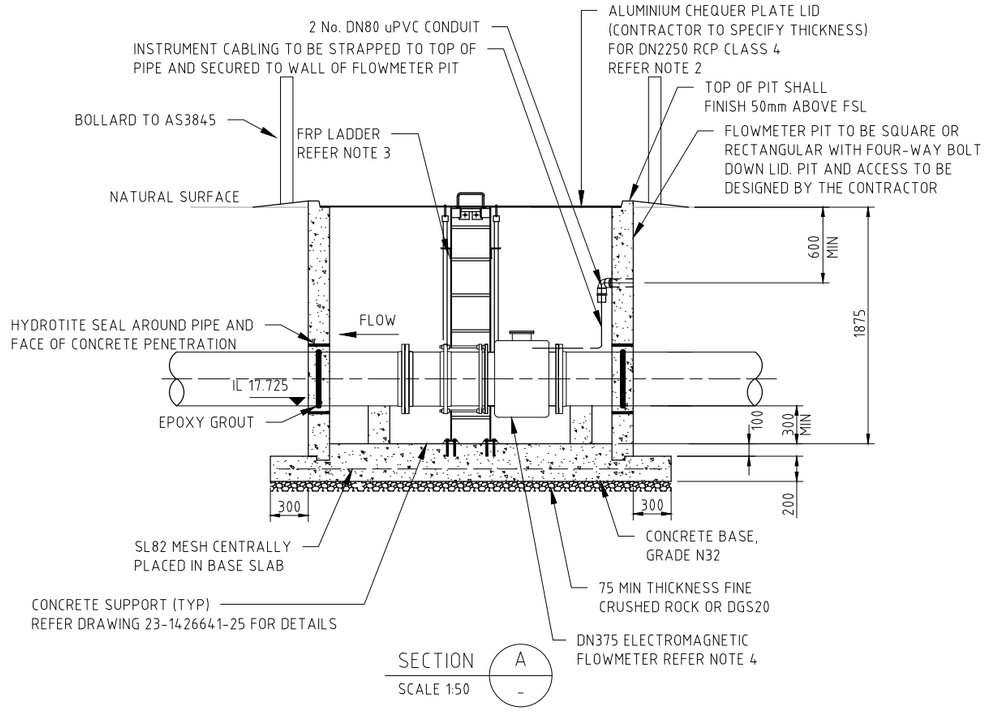

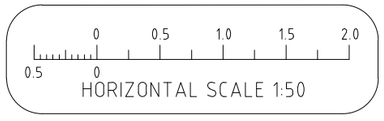

No.	REVISION DETAILS	DWN	DATE
0	ISSUED FOR TENDER	RK	16.04.21

CONSULTANT DETAILS:
GHD
2/57 Graham Street
Nowra NSW 2541
T 61 2 4424 4900 F 61 2 4424 4999
www.ghd.com

CONSULT. REFERENCE No. 23-14266-41-17

Shoalhaven Water
A Group of Shoalhaven City Council

DESIGNED: ET	DATE: 30.07.14	COMPANY: GHD	
DRAWN: JL	DATE: 30.07.14	COMPANY: GHD	
CHECKED: MS	DATE: 09.04.21	COMPANY: GHD	
APPROVED: CS	DATE: 16.04.21	COMPANY: GHD	

TITLE:
SHOALHAVEN WATER
ST ANNS PUMPING STATION UPGRADE

FLOWMETER PIT AND PRESSURE TRANSDUCER DETAILS

SIZE	SCALE	INDEX No.	DRAWING No.	SHEET	REV No.
A3	1:50		23-1426641-17		0

Plot Date: 15/04/21 - 00:23 Cad File: C:\CAD\temp\AcPublish_811544\23-1426641-17.dwg

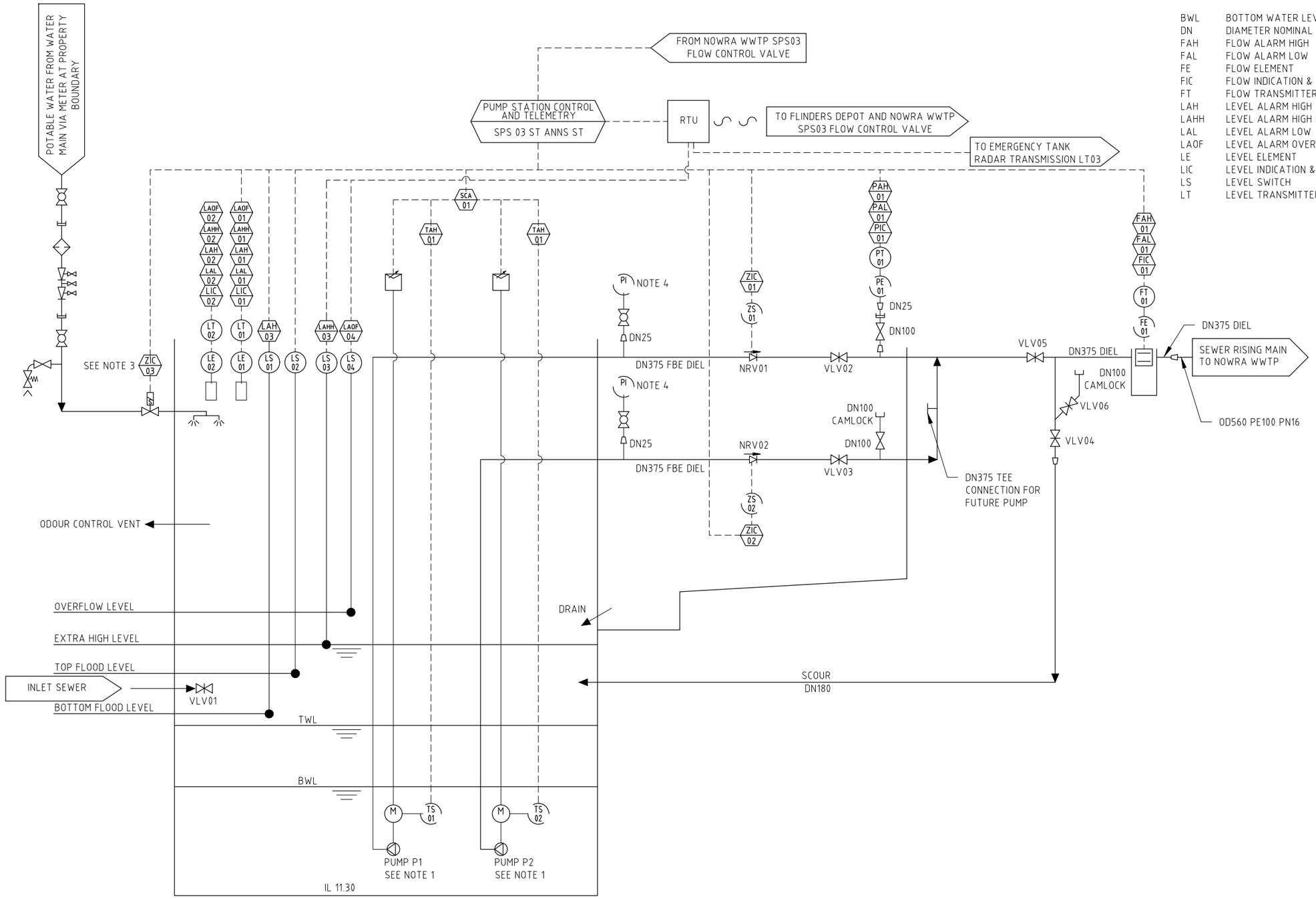

ABBREVIATIONS

BWL	BOTTOM WATER LEVEL
DN	DIAMETER NOMINAL
FAH	FLOW ALARM HIGH
FAL	FLOW ALARM LOW
FE	FLOW ELEMENT
FIC	FLOW INDICATION & CONTROL
FT	FLOW TRANSMITTER
LAH	LEVEL ALARM HIGH
LAHH	LEVEL ALARM HIGH HIGH
LAL	LEVEL ALARM LOW
LAOF	LEVEL ALARM OVERFLOW
LE	LEVEL ELEMENT
LIC	LEVEL INDICATION & CONTROL
LS	LEVEL SWITCH
LT	LEVEL TRANSMITTER
NRV	NON-RETURN VALVE
PAH	PRESSURE ALARM HIGH
PAL	PRESSURE ALARM LOW
PE	PRESSURE ELEMENT
PI	PRESSURE INDICATOR
PIC	PRESSURE INDICATION & CONTROL
PLC	PROGRAMMABLE LOGIC CONTROLLER
PT	PRESSURE TRANSMITTER
RTU	REMOTE TELEMETRY UNIT
SCA	SWITCHGEAR & CONTROL ASSEMBLY
SS	SOFT STARTER
TAH	TEMPERATURE ALARM HIGH
TS	TEMPERATURE SWITCH
TWL	TOP WATER LEVEL
VLV	VALVE
ZIC	POSITION INDICATION & CONTROL
ZS	POSITION SWITCH

LEGEND:

- SLUICE VALVE
- BALL VALVE
- NON-RETURN VALVE
- SOLENOID VALVE
- RPZ VALVE
- VACUUM BREAK VALVE
- HOSE COCK
- PUMP
- REDUCER
- CAMLOCK FITTING
- BARREL UNION
- ELECTRONIC FUNCTION
- PORTABLE PRESSURE GAUGE
- ELECTRIC MOTOR
- FLOW DIRECTION
- FLEXIBLE HOSE
- RADIO SIGNAL
- MAGNETIC FLOWMETER
- VARIABLE SPEED DRIVE
- STRAINER

NOTES:

1. THE TWO PUMP INSTALLATION SHOWN HERE PROVIDES FOR ONE DUTY PUMP AND ONE EQUAL STANDBY PUMP. THESE PUMPS ARE TO ALTERNATE IN DUTY.
2. THIS DRAWING SHOWS PUMP MOTORS WITH THERMISTOR MOTOR PROTECTION. OTHER MOTOR PROTECTION FAULTS ARE LISTED ON THE MANUFACTURER SUPPLIED PUMP DATA SHEET.
3. THE POTABLE WATER WELL WASHER IS TO OPERATE ONCE A DAY FOR 10 MINUTES AND IS TO START WHEN THE FIRST PUMP STARTS AFTER MIDNIGHT AND FOR 1 MINUTE AT EACH PUMP START.
4. PORTABLE PRESSURE GAUGE TO BE KEPT IN SPS03 SWITCH ROOM.

No.	REVISION DETAILS	DWN	DATE
0	ISSUED FOR TENDER	RK	16.04.21

CONSULTANT DETAILS:
GHD
2/57 Graham Street
Nowra NSW 2541
T 61 2 4424 4900 F 61 2 4424 4999
www.ghd.com

CONSULT. REFERENCE No. 23-14266-41-18

Shoalhaven Water
A Group of Shoalhaven City Council

DESIGNED: MS	DATE: 10.07.15	COMPANY: GHD	
DRAWN: JL	DATE: 10.07.15	COMPANY: GHD	
CHECKED: MS	DATE: 01.04.21	COMPANY: GHD	
APPROVED: CS	DATE: 16.04.21	COMPANY: GHD	

TITLE:
SHOALHAVEN WATER
ST ANNS PUMPING STATION UPGRADE

SPS 03 PROCESS AND INSTRUMENTATION DIAGRAM

SIZE	SCALE	INDEX No.	DRAWING No.	SHEET	REV No.
A3	N/A		23-14266-41-18		0

Plot Date: 15/04/21 - 00:23 Cad File: C:\CAD\temp\AcPublish_811544\23-1426641-18.dwg

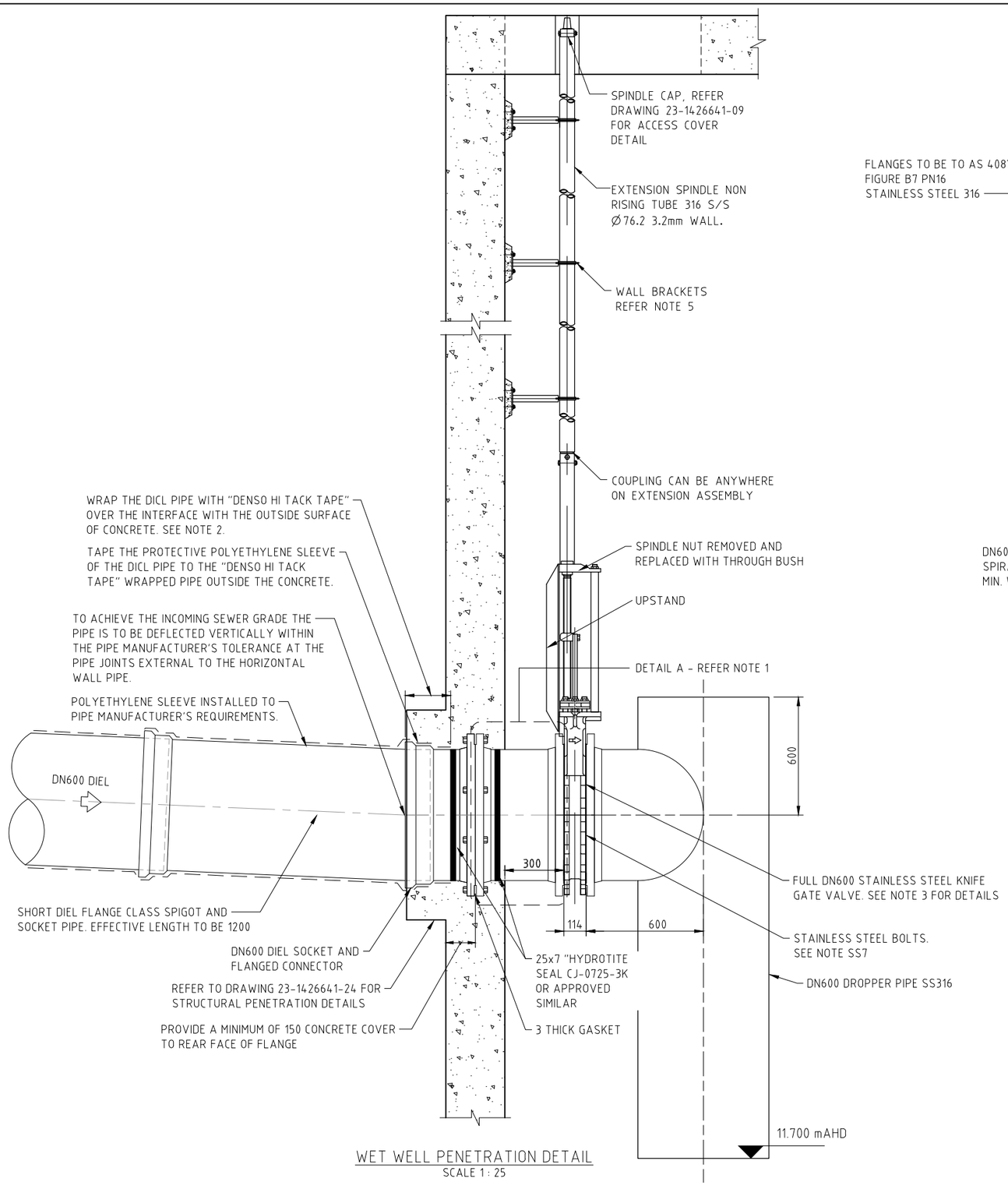

WET WELL PENETRATION DETAIL
SCALE 1 : 25

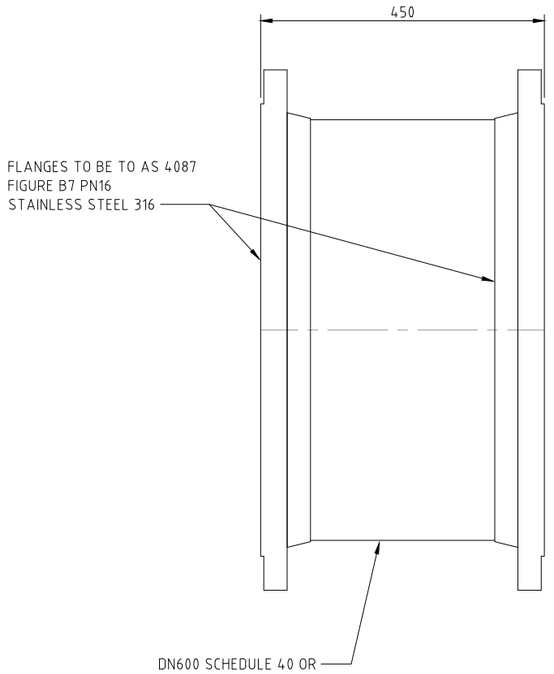

VALVE WALL PIPE

DETAIL A
SCALE 1 : 10

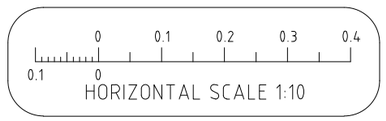

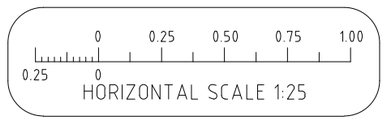

GENERAL NOTES :

1. EXTREME CARE MUST BE TAKEN WHEN INSTALLING THE WALL PIPE TO ENSURE THAT THE PIPE IS HORIZONTAL AND THE FLANGE ADJACENT TO THE VALVE IS VERTICAL TO WITHIN A TOLERANCE OF 0.2° AND WITH BOLT HOLES ALIGNED CORRECTLY. THIS ENSURES THE VALVE SPINDLE IS INSTALLED VERTICALLY AND ALIGNS WITH PLUMMER BLOCKS AND THE CENTRE OF THE HOLE IN THE TOP SLAB.
2. IF THE INLET PIPE IS DIEL THEN THE PIPE AT THE INTERFACE WITH THE OUTER FACE OF THE CONCRETE WALL IS TO BE WRAPPED WITH "DENSO HI TACK TAPE" OVER THE AREA INDICATED ON THIS DRAWING. THE SURFACE IS TO BE PREPARED AS REQUIRED BY THE TAPE MANUFACTURER AND PRIMED WITH A THIN FILM OD "DENSO PRIMER" THE PIPE IS THEN TO BE WRAPPED WITH THE "DENSO HI TACK TAPE" WITH EACH BINDING OVERLAPPING THE PREVIOUS BINDING BY A MINIMUM OF 50% .
3. THE VALVE IS TO BE A FULL 316 STAINLESS STEEL LUGGED KNIFE GATE VALVE WITH METAL SEAT AND RTFE SCRAPER, "KEYSTONE FIGURE 952" OR APPROVED ALTERNATIVE.
4. ALL FLANGES ARE TO BE TO AS 4087 FIGURE B7 PN16.
5. WALL BRACKETS FIXING AND SPACING TO COMPLY WITH KNIFE GATE VALVE MANUFACTURERS REQUIREMENTS.

STAINLESS NOTES :

SS1. STAINLESS STEEL WORK SHALL COMPLY TO AS/NZS 1554.6-1994 AND AS 2837-1986 OR APPROVED EQUIVALENT.

SS2. STAINLESS STEEL MATERIALS SHALL BE SUPPLIED TO AISI GRADE 316 OR GRADE 316L.

SS3. WELDING SHALL COMPLY TO AUSTRALIAN WELDING RESEARCH ASSOCIATION TECHNICAL NOTE 16 - WELDING STAINLESS STEELS. WELDS SHALL BE 4mm CONTINUOUS FILLET WELDS (AWS E316L ELECTRODE), UNLESS NOTED OTHERWISE.

SS4. ALL WELDS ARE TO BE AS SHOWN AND ARE TO BE CONTINUOUS SEAL WELDS.

SS5. ALL STORAGE, FABRICATION AND WELDING OF STAINLESS STEEL SHALL BE CARRIED OUT IN AN AREA SPECIFICALLY DEDICATED TO THE PARTICULAR GRADE OF STAINLESS STEEL BEING USED.

SS6. ALL FABRICATED STAINLESS STEELWORKS ARE TO BE PASSIVATED.

SS7. ALL STAINLESS STEEL BOLTS ARE TO BE ASSEMBLED WITH ANTI GALLING COMPOUND "DURALAC" OR APPROVED EQUIVALENT.

No.	REVISION DETAILS	DWN	DATE
0	ISSUED FOR TENDER	RK	16.04.21

CONSULTANT DETAILS:
GHD
2/57 Graham Street
Nowra NSW 2541
T 61 2 4424 4900 F 61 2 4424 4999
www.ghd.com

CONSULT. REFERENCE No. 23-14266-41-19

Shoalhaven Water
A Group of Shoalhaven City Council

DESIGNED: ET	DATE: 30.07.14	COMPANY: GHD	
DRAWN: JL	DATE: 30.07.14	COMPANY: GHD	
CHECKED: MS	DATE: 01.04.21	COMPANY: GHD	
APPROVED: CS	DATE: 16.04.21	COMPANY: GHD	

TITLE:
SHOALHAVEN WATER
ST ANNS PUMPING STATION UPGRADE

WET WELL PENETRATION DETAIL

SIZE	SCALE	INDEX No.	DRAWING No.	SHEET	REV No.
A3	1:50		23-1426641-19		0

Plot Date: 15/04/21 - 00:23 Cad File: C:\CAD\temp\AcPublish_811544\23-1426641-19.dwg

NOTES:

1. THE PIPE MATERIAL BELOW GROUND AND NOT UNDER CONCRETE SLABS SHALL BE POLYETHYLENE PE 100 PN16. PLASSON OR APPROVED SIMILAR COMPRESSION FITTINGS MAY BE USED ON THE POLYETHYLENE PIPES.
2. THE POTABLE WATER SUPPLY PIPE FROM THE WATER MAIN SHALL BE SIZED TO PROVIDE 1 l/s (AT 250 kPa MAINS PRESSURE) ON THE DOWNSTREAM SIDE OF THE RPZD. THIS SERVICE PIPE AND THE RPZD AND ASSOCIATED FITTINGS SHALL HAVE A MINIMUM DIAMETER OF DN25 FOR COPPER AND STAINLESS STEEL AND DN32 FOR POLYETHYLENE. THE HOSE COCK AND THE WELL WASHER PIPE SHALL BE DN20 FOR COPPER AND STAINLESS STEEL AND DN25 FOR POLYETHYLENE.
3. FITTINGS ABOVE GROUND SHALL BE BRONZE OR GRADE 316 STAINLESS STEEL. ALL FITTINGS SHALL HAVE AN AUSTRALIAN STANDARDS MARK.
4. ALL STAINLESS STEEL THREADS SHALL BE ASSEMBLED WITH THREAD TAPE OR ANTI-GALLING COMPOUND.

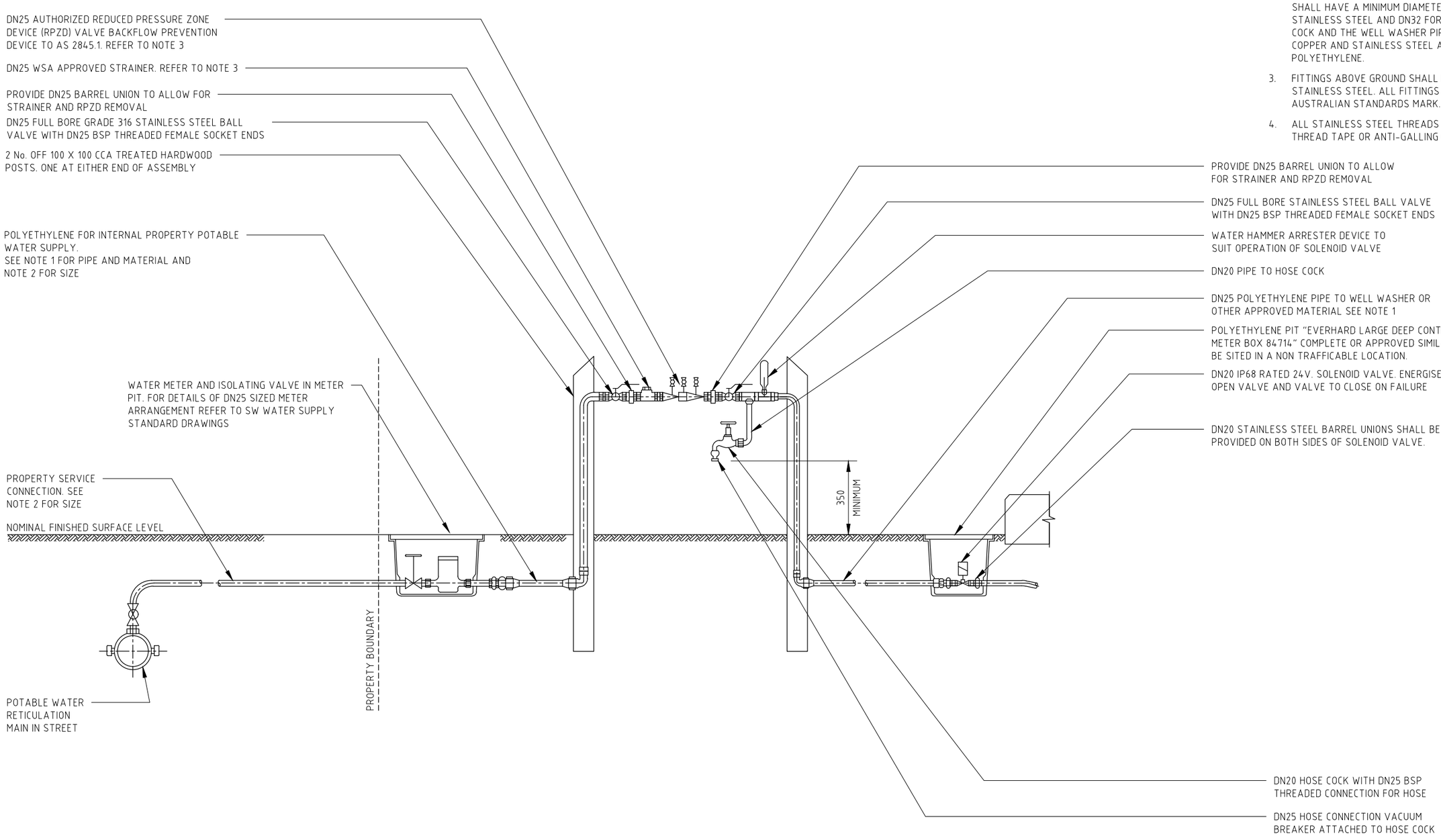

No.	REVISION DETAILS	DWN	DATE
0	ISSUED FOR TENDER	RK	16.04.21

CONSULTANT DETAILS:
GHD
2/57 Graham Street
Nowra NSW 2541
T 61 2 4424 4900 F 61 2 4424 4999
www.ghd.com

CONSULT. REFERENCE No. 23-14266-41-20

Shoalhaven Water
A Group of Shoalhaven City Council

DESIGNED: ET	DATE: 30.07.14	COMPANY: GHD	
DRAWN: KDM	DATE: 30.07.14	COMPANY: GHD	
CHECKED: MS	DATE: 01.04.21	COMPANY: GHD	
APPROVED: CS	DATE: 16.04.21	COMPANY: GHD	

TITLE:
SHOALHAVEN WATER
ST ANNS PUMPING STATION UPGRADE

RPZ DEVICE TYPICAL LAYOUT

SIZE	SCALE	INDEX No.	DRAWING No.	SHEET	REV No.
A3	NTS		23-1426641-20		0

Plot Date: 15/04/21 - 00:24 Cad File: C:\CAD\temp\AcPublish_811544\23-1426641-20.dwg

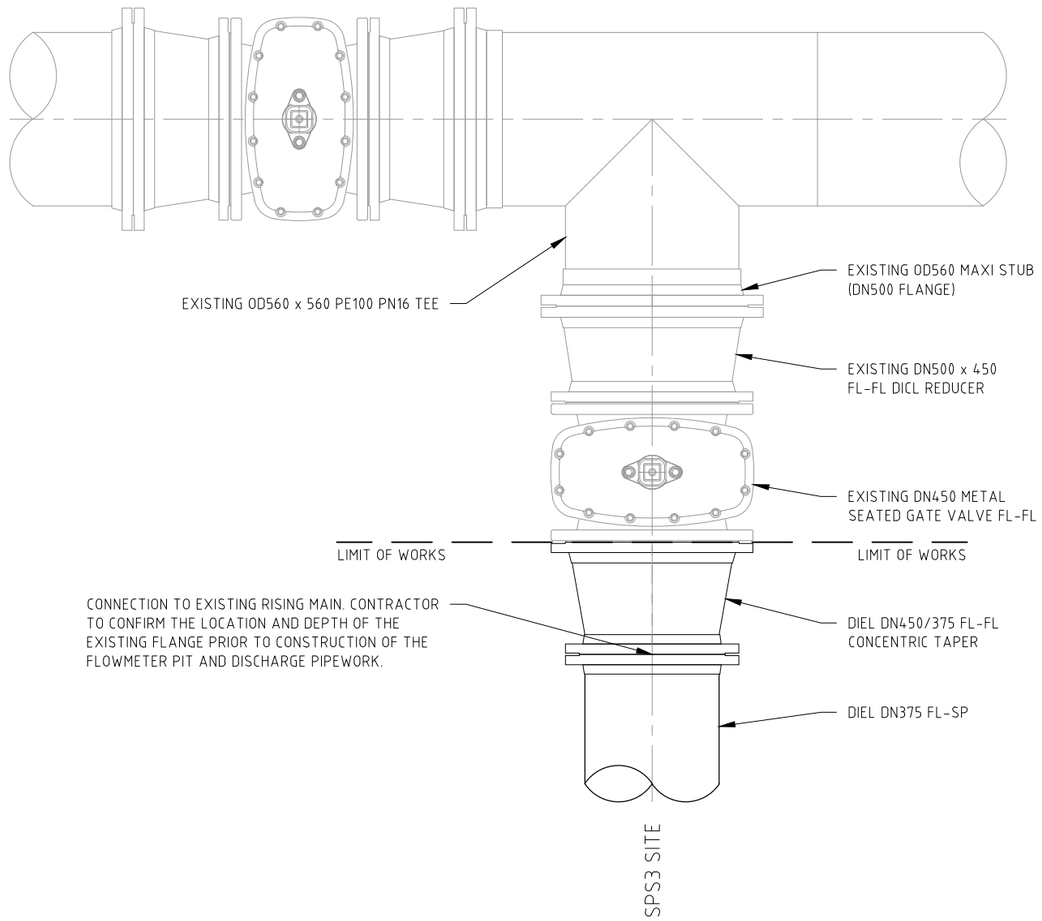

CONNECTION DETAIL
TO NEW RISING MAIN
SCALE 1:20

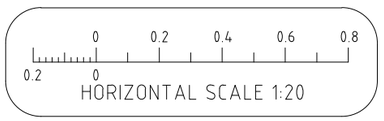

No.	REVISION DETAILS	DWN	DATE
0	ISSUED FOR TENDER	RK	16.04.21

CONSULTANT DETAILS:
GHD
2/57 Graham Street
Nowra NSW 2541
T 61 2 4424 4900 F 61 2 4424 4999
www.ghd.com

CONSULT. REFERENCE No.
23-14266-41-21

Shoalhaven Water
A Group of Shoalhaven City Council

DESIGNED: ET	DATE: 30.07.14	COMPANY: GHD	
DRAWN: KDM	DATE: 30.07.14	COMPANY: GHD	
CHECKED: MS	DATE: 16.04.21	COMPANY: GHD	
APPROVED: CS	DATE: 16.04.21	COMPANY: GHD	

TITLE:
SHOALHAVEN WATER
ST ANNS PUMPING STATION UPGRADE

RISING MAIN LIMIT OF WORKS CONNECTION DETAIL

SIZE	SCALE	INDEX No.	DRAWING No.	SHEET	REV No.
A3	AS SHOWN		23-1426641-21		0

Plot Date: 15/04/21 - 15:45 Cad File: N:\AU\Wollongong\Projects\23\12540351\CADD\Drawings\St Anns\23-1426641-21.dwg

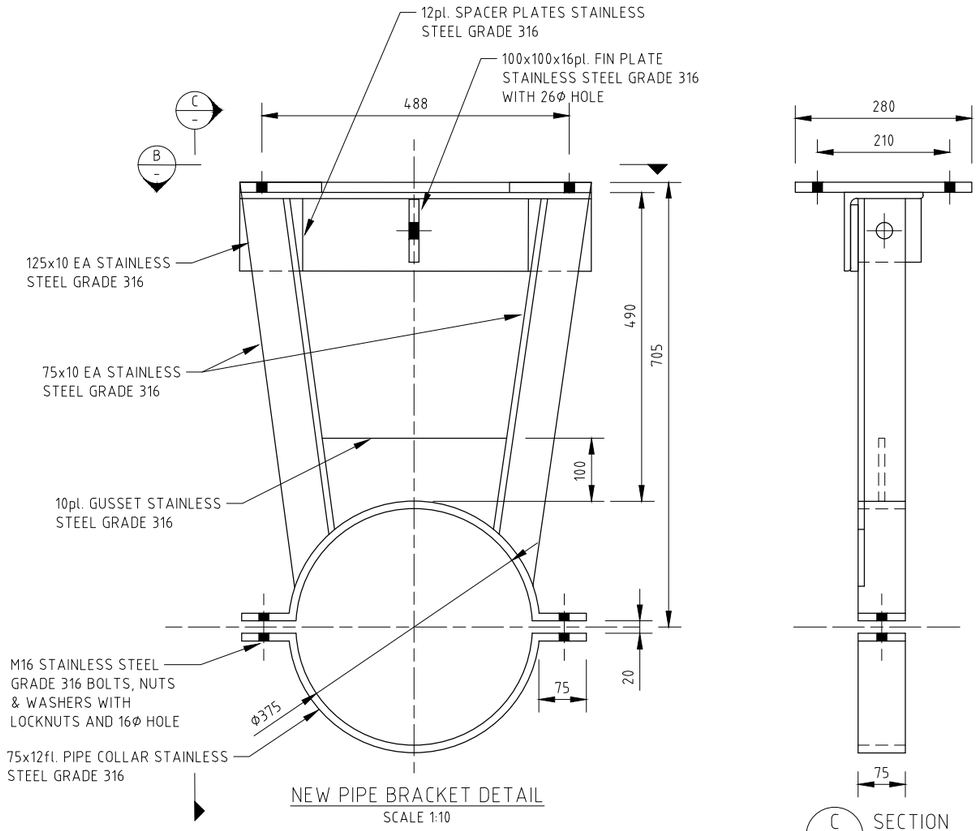

NEW PIPE BRACKET DETAIL
SCALE 1:10

C - SECTION
SCALE 1 : 10

130x16fl. BASEPLATE, STAINLESS STEEL GRADE 316
2-M12 STAINLESS STEEL GRADE 316 BOLTS WITH STAINLESS STEEL LOCKING WASHER & 40x40x10pl. WASHER WITH CENTRAL 14Ø HOLE. BOLTS TO BE TORQUED TO MANUFACTURER'S SPECIFICATION. PROVIDE ISOLATOR WASHERS BETWEEN BOLTS AND BASE PLATE. BOLT EMBEDMENT DEPTH TO BE 110mm FIXED WITH HILTI HIT RE-500 EPOXY OR APPROVED EQUIVALENT

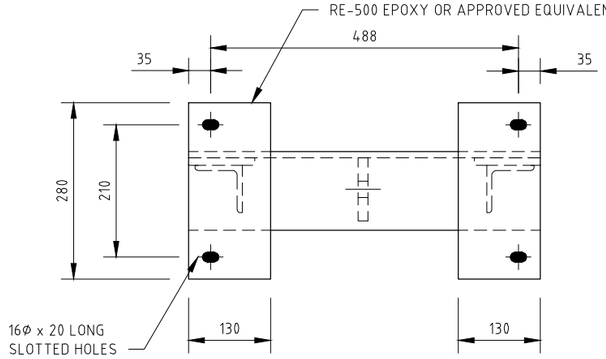

B - SECTION
SCALE 1 : 10

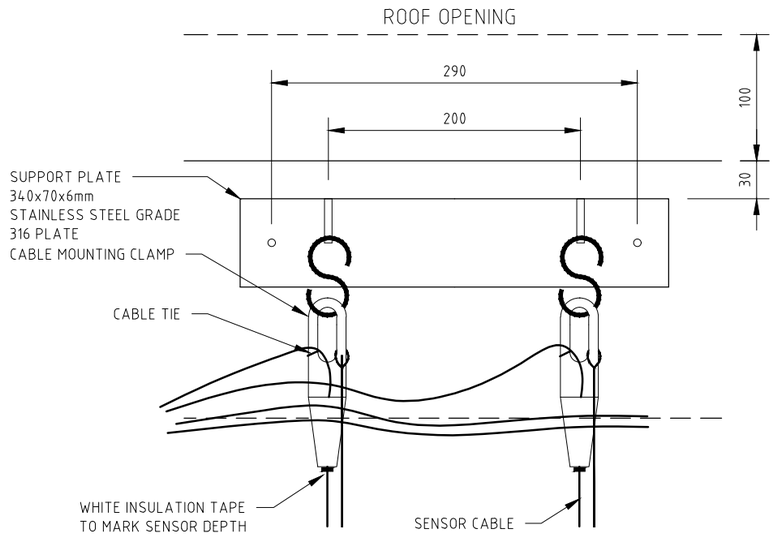

LEVEL SWITCH MOUNTING AND SUPPORT BRACKET DETAIL FRONT VIEW
SCALE 1:5

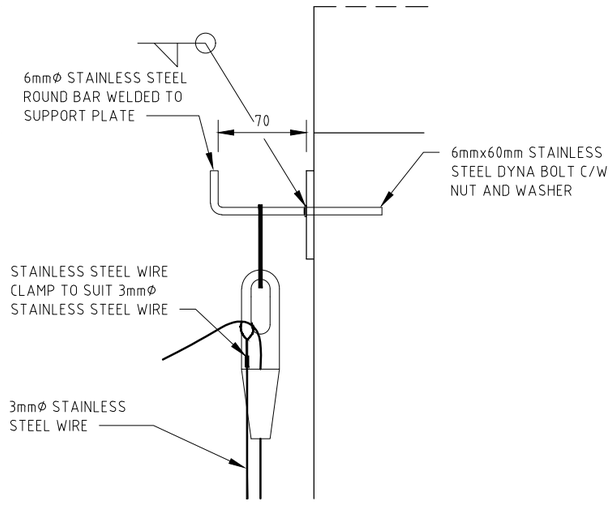

LEVEL SWITCH MOUNTING AND SUPPORT BRACKET DETAIL SIDE VIEW
SCALE 1:5

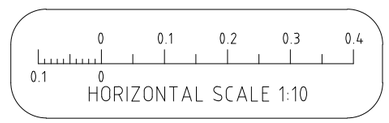

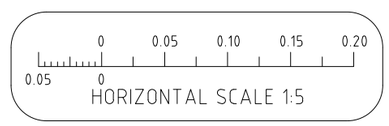

No.	REVISION DETAILS	DWN	DATE
0	ISSUED FOR TENDER	RK	16.04.21

CONSULTANT DETAILS:
GHD
2/57 Graham Street
Nowra NSW 2541
T 61 2 4424 4900 F 61 2 4424 4999
www.ghd.com

CONSULT. REFERENCE No.
23-14266-41-22

Shoalhaven Water
A Group of Shoalhaven City Council

DESIGNED: ET	DATE: 30.07.14	COMPANY: GHD	
DRAWN: KDM	DATE: 30.07.14	COMPANY: GHD	
CHECKED: MS	DATE: 01.04.21	COMPANY: GHD	
APPROVED: CS	DATE: 16.04.21	COMPANY: GHD	

TITLE:
SHOALHAVEN WATER
ST ANNS PUMPING STATION UPGRADE

MISCELLANEOUS DETAILS

SIZE	SCALE	INDEX No.	DRAWING No.	SHEET	REV No.
A3	1:50		23-1426641-22		0

Plot Date: 15/04/21 - 00:25 Cad File: C:\CAD\temp\AcPublish_811544\23-1426641-22.dwg

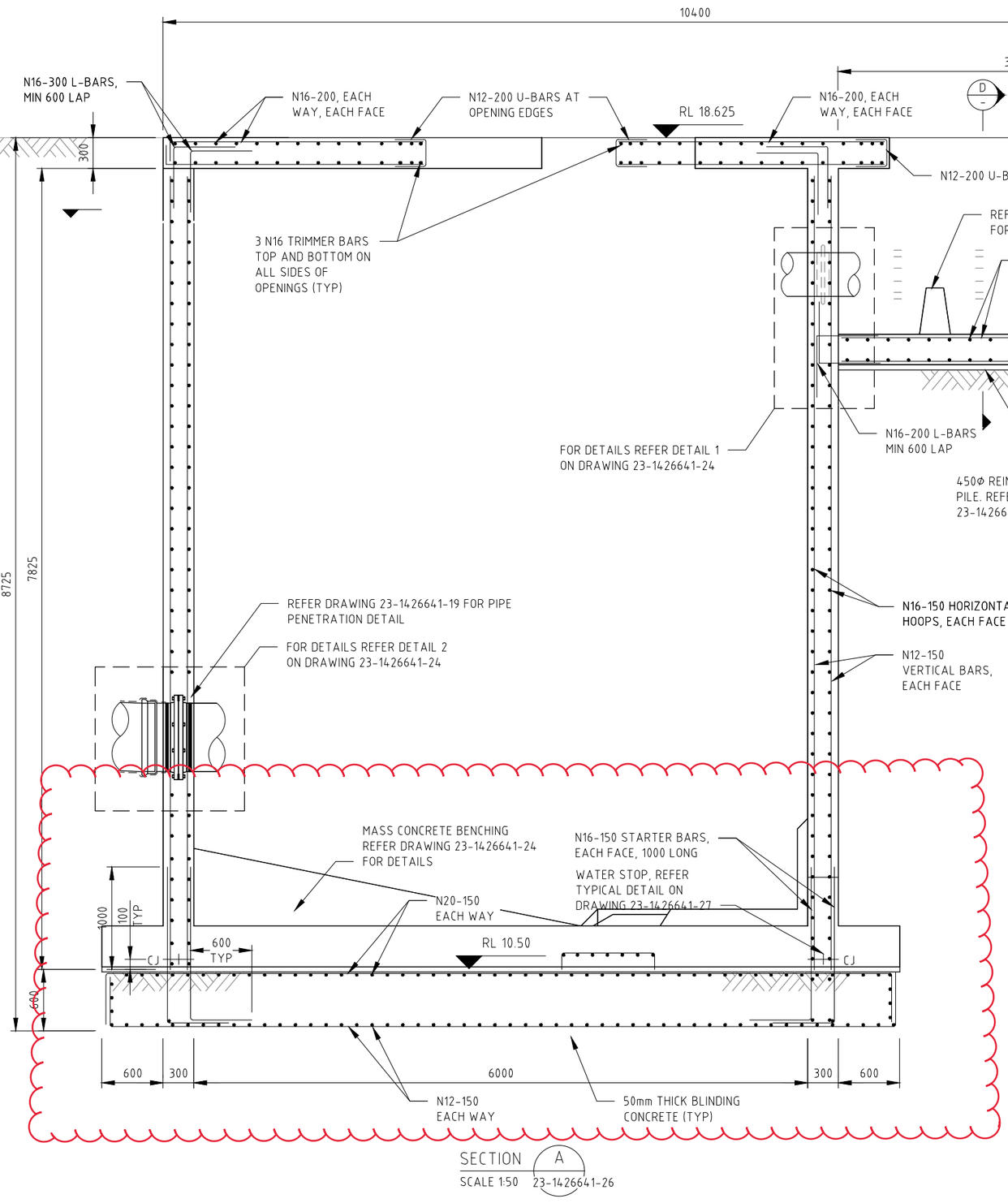

NOTES:

1. FOR PENETRATION SETOUT AND LEVELS REFER TO DRAWING 23-1426641-25.
2. FOR STRUCTURAL NOTES REFER TO DRAWING 23-1426641-02 AND 03.
3. CONCRETE GRADE = S40
4. CLEAR COVER OF REINFORCEMENT
   - LIQUID FACE OF WET WELL = 75mm
   - EXTERNAL FACE IN CONTACT WITH GROUND = 65mm
   - ALL OTHER FACES = 50mm

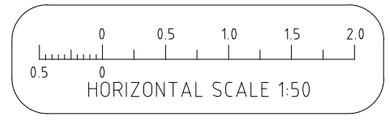

No.	REVISION DETAILS	DWN	DATE
0	ISSUED FOR TENDER	RK	16.04.21

CONSULTANT DETAILS:
GHD
2/57 Graham Street
Nowra NSW 2541
T 61 2 4424 4900 F 61 2 4424 4999
www.ghd.com

CONSULT. REFERENCE No. 23-14266-41-23

Shoalhaven Water
A Group of Shoalhaven City Council

DESIGNED: KS	DATE: 10.07.15	COMPANY: GHD	
DRAWN: AK	DATE: 10.07.15	COMPANY: GHD	
CHECKED: MS	DATE: 01.04.21	COMPANY: GHD	
APPROVED: CS	DATE: 16.04.21	COMPANY: GHD	

TITLE:
SHOALHAVEN WATER
ST ANNS PUMPING STATION UPGRADE

WET WELL AND VALVE CHAMBER REINFORCEMENT DETAILS
SHEET 1 OF 2

SIZE	SCALE	INDEX No.	DRAWING No.	SHEET	REV No.
A3	1:50		23-1426641-23		0

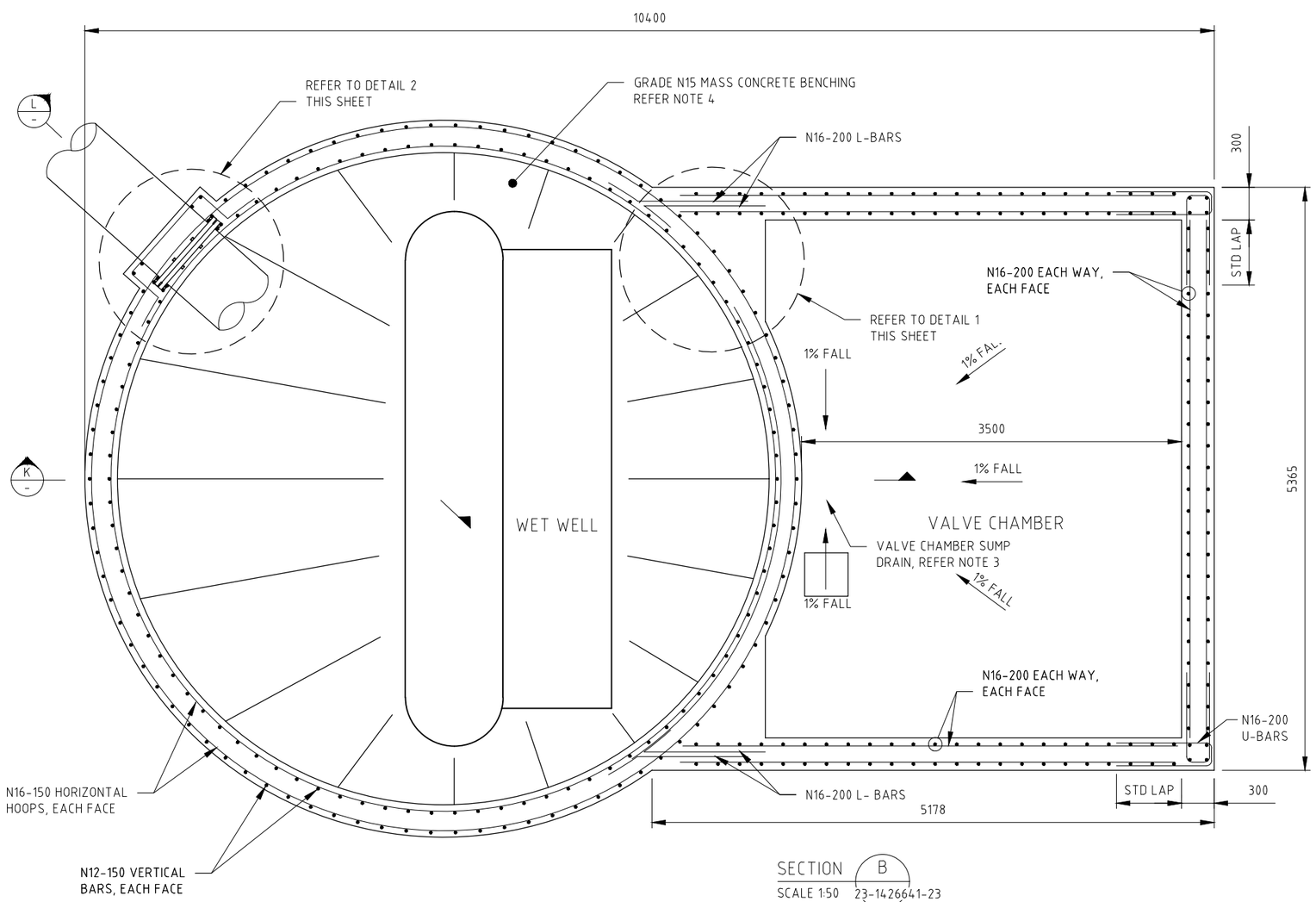

SECTION B
SCALE 1:50 23-1426641-23

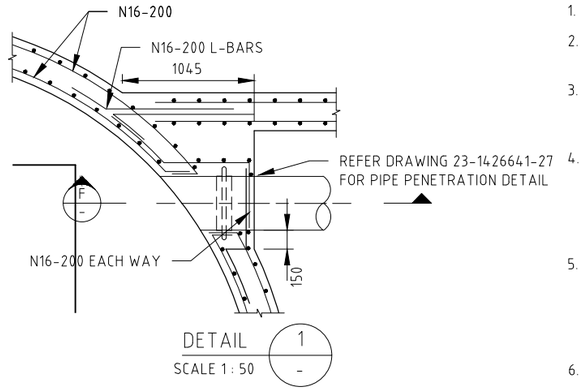

DETAIL 1
SCALE 1:50

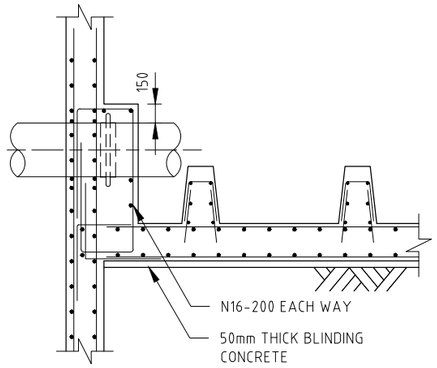

SECTION F
SCALE 1:50

NOTE:

1. WET WELL TOE NOT SHOWN FOR CLARITY.
2. REFER TO NOTES ON DRAWING 23-1426641-23.
3. MASS CONCRETE BENCHING IN VALVE CHAMBER TO BE GRADE N15 AND HAVE 1% FALL TOWARDS SUMP DRAIN..
4. MINIMUM BENCHING SLOPE IN WET WELL TO BE 1 IN 3 AROUND WET WELL. PERIMETER BENCHING LEVEL SHALL FINISH AT IL 11.383m AHD AND SLOPE OF BENCHING SHALL VARY TO ACHIEVE THIS.
5. BOLTS FOR FIXING PUMP TO WET WELL FLOOR SHALL BE STAINLESS STEEL 316, MIN. EMBEDMENT DEPTH OF 200mm FIXED WITH HILTI HIT RE-500 EPOXY OR APPROVED EQUIVALENT.
6. 225mm CLEARANCE TO BE PROVIDED BETWEEN START OF BENCHING AND EDGE OF PUMPS. REFER TO DRAWING 23-1426641-25 FOR PUMP SET OUT POINTS.

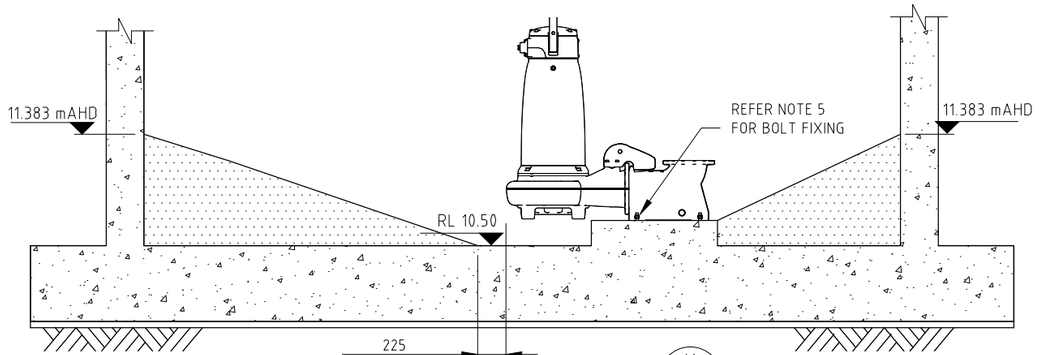

SECTION K
SCALE 1:50

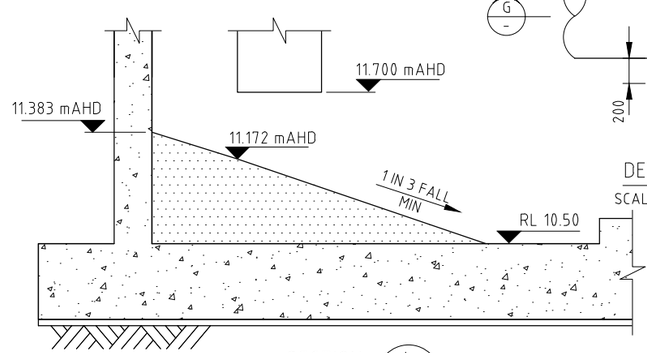

SECTION L
SCALE 1:50

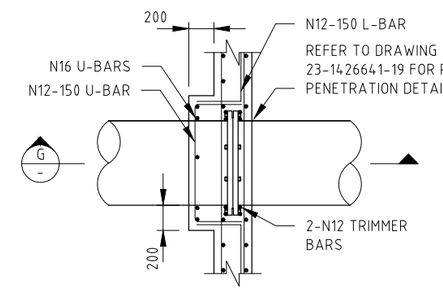

DETAIL 2
SCALE 1:50

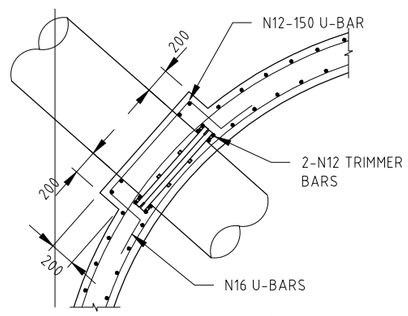

SECTION G
SCALE 1:50

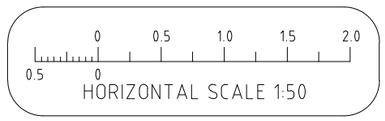

No.	REVISION DETAILS	DWN	DATE
0	ISSUED FOR TENDER	RK	16.04.21

CONSULTANT DETAILS:
GHD
2/57 Graham Street
Nowra NSW 2541
T 61 2 4424 4900 F 61 2 4424 4999
www.ghd.com

CONSULT. REFERENCE No.
23-14266-41-24

Shoalhaven Water
A Group of Shoalhaven City Council

DESIGNED: KS	DATE: 10.07.15	COMPANY: GHD	
DRAWN: AK	DATE: 10.07.15	COMPANY: GHD	
CHECKED: MS	DATE: 01.04.21	COMPANY: GHD	
APPROVED: CS	DATE: 16.04.21	COMPANY: GHD	

TITLE:
SHOALHAVEN WATER
ST ANNS PUMPING STATION UPGRADE

WET WELL AND VALVE CHAMBER REINFORCEMENT DETAILS
SHEET 2 OF 2

SIZE	SCALE	INDEX No.	DRAWING No.	SHEET	REV No.
A3	1:50		23-1426641-24		0

Plot Date: 15/04/21 - 00:26 Cad File: C:\CAD\temp\AcPublish_811544\23-1426641-24.dwg

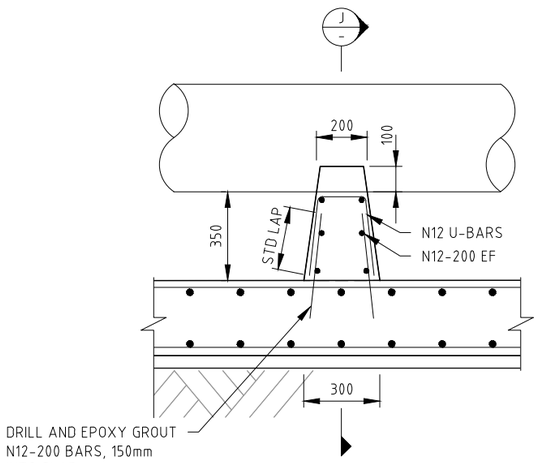

PIPE SUPPORT
REINFORCEMENT DETAIL
SCALE 1 : 25

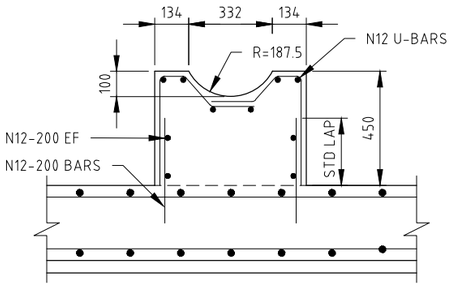

SECTION J
SCALE 1:25

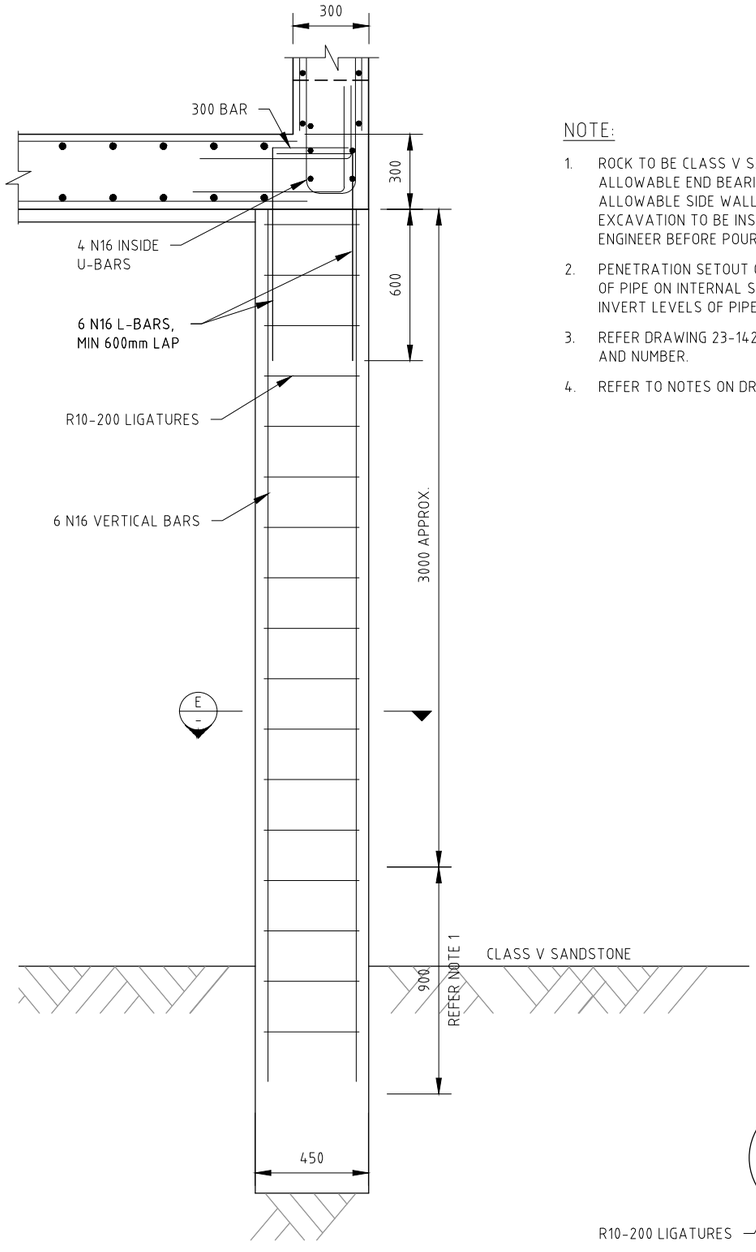

PILE ELEVATION (TYPICAL)
SCALE 1 : 25

NOTE:

1. ROCK TO BE CLASS V SANDSTONE OR BETTER WITH ALLOWABLE END BEARING CAPACITY = 1000kPa AND ALLOWABLE SIDE WALL ADHESION = 150kPa. EXCAVATION TO BE INSPECTED BY GEOTECHNICAL ENGINEER BEFORE POURING CONCRETE.
2. PENETRATION SETOUT CO-ORDINATES ARE CENTRELINE OF PIPE ON INTERNAL SPS3 WALL. LEVELS ARE THE INVERT LEVELS OF PIPES/CONDUITS IN mAHD.
3. REFER DRAWING 23-1426641-26 FOR PILE LOCATION AND NUMBER.
4. REFER TO NOTES ON DRAWING 23-1426641-23.

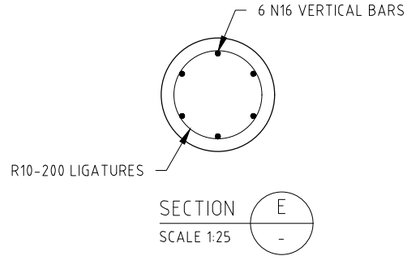

SECTION E
SCALE 1:25

PENETRATION SETOUT AND LEVELS

DESCRIPTION	EASTING	NORTHING	INVERT LEVEL mAHD
INLET SEWER INTO WET WELL	280362.31	6137170.97	13.450
WELL WASHER INTO WET WELL	280365.99	6137170.28	17.500
ELECTRICAL CONDUIT INTO WET WELL - 1	280367.49	6137172.18	18.000
ELECTRICAL CONDUIT INTO WET WELL - 2	280367.53	6137172.35	18.000
ELECTRICAL CONDUIT INTO WET WELL - 3	280367.55	6137172.52	18.000
ELECTRICAL CONDUIT INTO WET WELL - 4	280367.57	6137172.69	18.000
SCOUR PIPE INTO WET WELL	280367.58	6137172.97	17.050
PUMP 1 PIPE FROM WET WELL TO VALVE CHAMBER	280363.12	6137175.54	17.050
PUMP 2 PIPE FROM WET WELL TO VALVE CHAMBER	280366.70	6137175.05	17.050
ODOUR VENTILATION PIPE FROM WET WELL	280361.72	6137173.82	18.000
FUTURE PIPE FROM WET WELL TO VALVE CHAMBER	280364.99	6137175.90	17.050
PUMP 1 PIPE FROM VALVE CHAMBER TO RM	280363.71	6137179.91	17.050
PUMP 2 PIPE FROM VALVE CHAMBER TO RM	280367.30	6137179.42	17.050
FUTURE PIPE FROM VALVE CHAMBER TO RM	280365.50	6137179.66	17.050
ELECTRICAL CONDUIT INTO VALVE CHAMBER - 1	280367.55	6137177.05	18.000
ELECTRICAL CONDUIT INTO VALVE CHAMBER - 2	280367.51	6137176.72	18.000
CENTRE OF SUMP DRAIN IN VALVE CHAMBER	280365.06	6137176.42	16.605
SUMP DRAIN PENETRATION INTO WET WELL	280364.99	6137175.90	16.225
CENTRE OF PUMP 1	280362.83	6137173.42	10.500
CENTRE OF PUMP 2	280366.41	6137172.93	10.500
CENTRE OF FUTURE PUMP	280364.62	6137173.17	10.500
DISCHARGE PIPE FROM FLOWMETER PIPE INTO VALVE CHAMBER	280363.71	6137179.91	16.725

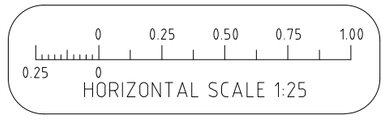

HORIZONTAL SCALE 1:25

No.	REVISION DETAILS	DWN	DATE
0	ISSUED FOR TENDER	RK	16.04.21

CONSULTANT DETAILS:
GHD
2/57 Graham Street
Nowra NSW 2541
T 61 2 4424 4900 F 61 2 4424 4999
www.ghd.com

CONSULT. REFERENCE No. 23-14266-41-25

Shoalhaven Water
A Group of Shoalhaven City Council

DESIGNED: KS	DATE: 10.07.15	COMPANY: GHD	
DRAWN: AK	DATE: 10.07.15	COMPANY: GHD	
CHECKED: MS	DATE: 01.04.21	COMPANY: GHD	
APPROVED: CS	DATE: 16.04.21	COMPANY: GHD	

TITLE:
SHOALHAVEN WATER
ST ANNS PUMPING STATION UPGRADE

PILE REINFORCEMENT DETAILS

SIZE	SCALE	INDEX No.	DRAWING No.	SHEET	REV No.
A3	1:25		23-1426641-25		0

Plot Date: 15/04/21 - 00:26 Cad File: C:\CAD\temp\AcPublish_811544\23-1426641-25.dwg

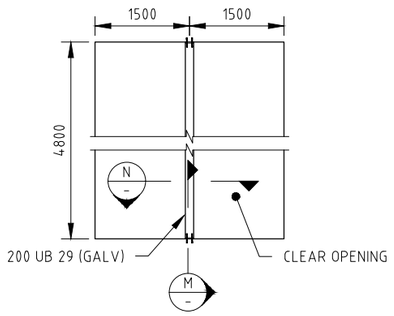

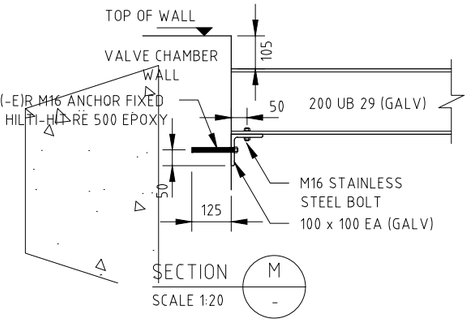

SECTION M
SCALE 1:20

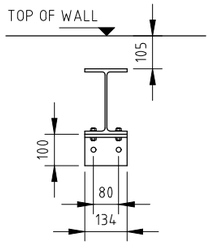

SECTION N
SCALE 1:20

VALVE CHAMBER BEAM PLAN
SCALE 1 : 100

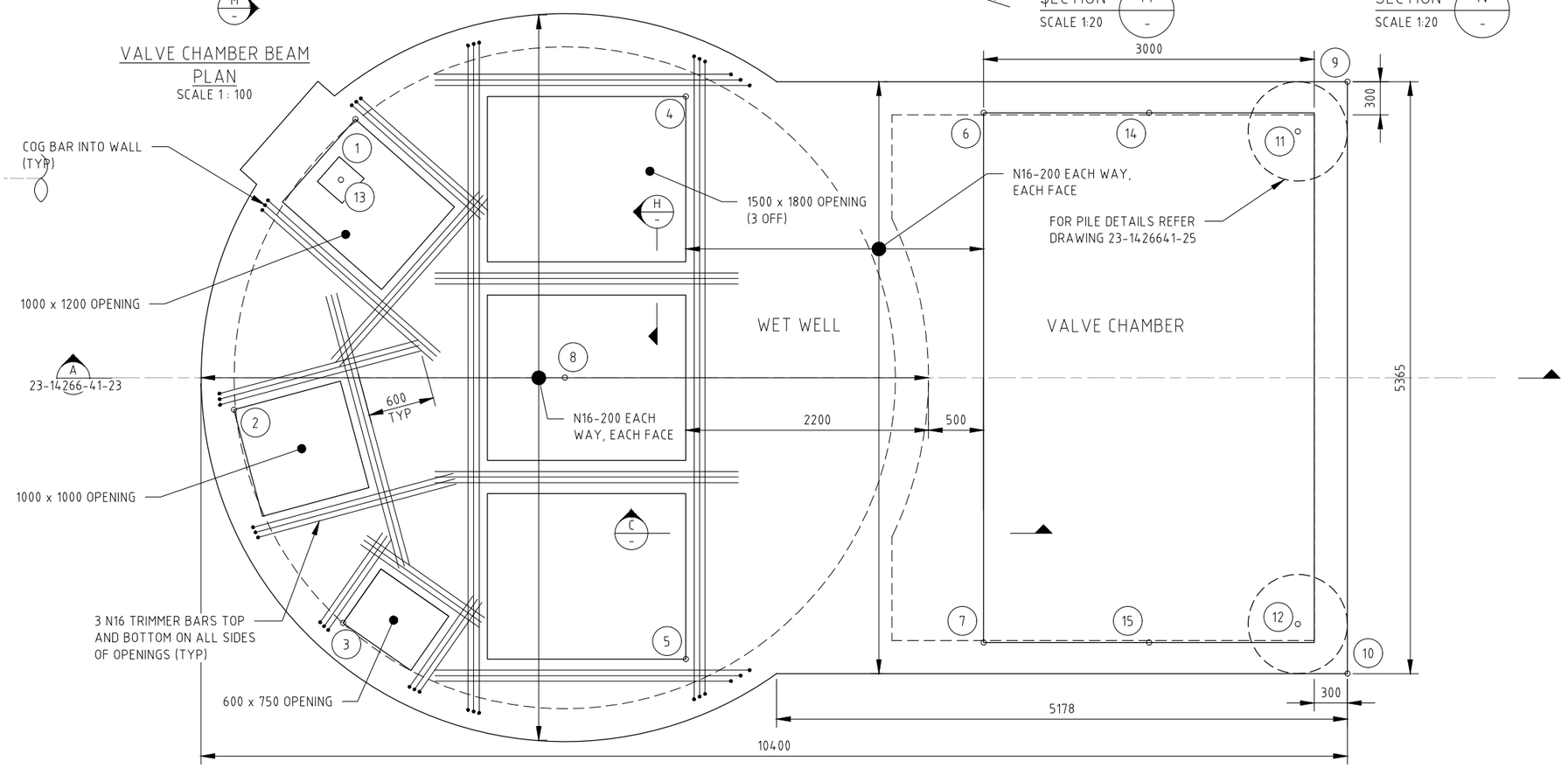

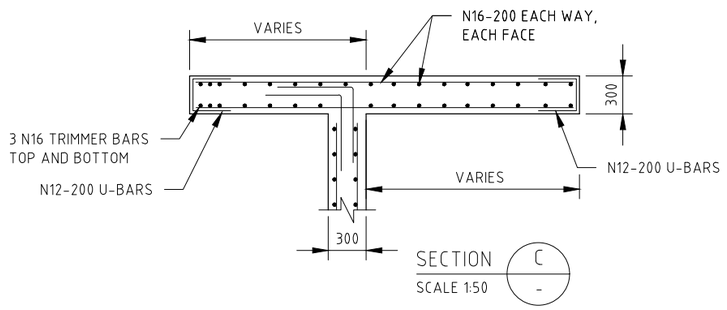

SECTION C
SCALE 1:50

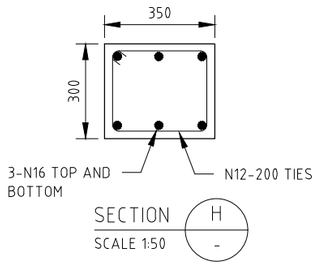

SECTION H
SCALE 1:50

WET WELL ROOF SLAB REINFORCEMENT PLAN
SCALE 1 : 50

NOTES

1. WET WELL TOE NOT SHOWN FOR CLARITY.
2. REFER TO NOTES ON DRAWING 23-1426641-23.
3. POTENTIAL POINTS OF CONTACT BETWEEN GALVANISED STEELWORK AND STAINLESS STEEL SHALL BE PROVIDED WITH NYLON INSERTS OR APPROVED EQUIVALENT APPROVED MATERIAL TO ISOLATE DISSIMILAR METALS.

CLEAR OPENING SETOUT		
SOP	EASTING	NORTHING
1	280362.00	6137171.36
2	280364.46	6137169.91
3	280366.51	6137170.63
4	280362.20	6137174.36
5	280367.26	6137173.67
6	280362.72	6137177.02
7	280367.48	6137176.37

WET WELL AND VALVE CHAMBER SETOUT			
POINT	EASTING	NORTHING	DESCRIPTION
8	280364.58	6137172.93	CENTRE WET WELL
9	280362.89	6137180.33	CORNER VALVE CHAMBER
10	280368.20	6137179.60	CORNER VALVE CHAMBER
11	280363.27	6137179.82	CENTRE PILE
12	280367.70	6137179.21	CENTRE PILE
13	280362.53	6137171.16	SPINDLE CAP CENTRE
14	280362.94	6137178.50	CENTRE REMOVABLE BEAM
15	280367.66	6137177.86	CENTRE REMOVABLE BEAM

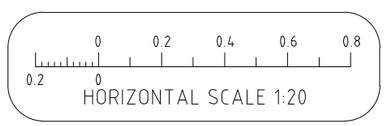

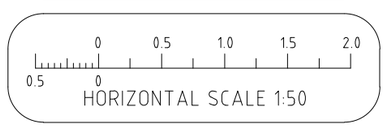

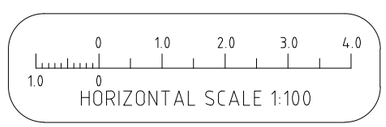

No.	REVISION DETAILS	DWN	DATE
0	ISSUED FOR TENDER	RK	16.04.21

CONSULTANT DETAILS:
GHD
2/57 Graham Street
Nowra NSW 2541
T 61 2 4424 4900 F 61 2 4424 4999
www.ghd.com

CONSULT. REFERENCE No.
23-14266-41-26

Shoalhaven Water
A Group of Shoalhaven City Council

DESIGNED: KS	DATE: 10.07.15	COMPANY: GHD	
DRAWN: AK	DATE: 10.07.15	COMPANY: GHD	
CHECKED: MS	DATE: 01.04.21	COMPANY: GHD	
APPROVED: CS	DATE: 16.04.21	COMPANY: GHD	

TITLE:
SHOALHAVEN WATER
ST ANNS PUMPING STATION UPGRADE

WET WELL ROOF SLAB REINFORCEMENT DETAILS

SIZE	SCALE	INDEX No.	DRAWING No.	SHEET	REV No.
A3	AS SHOWN		23-1426641-26		0

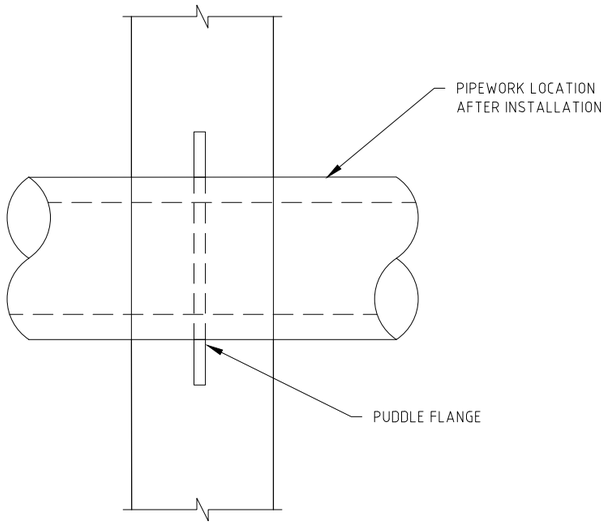

SECTION

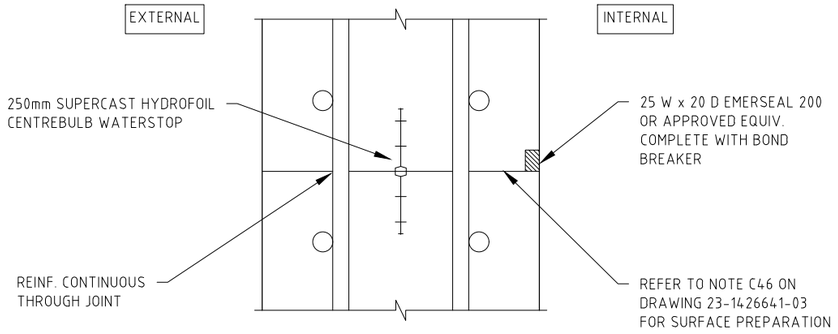

WALL HORIZONTAL CONSTRUCTION JOINT DETAIL
NOT TO SCALE

NOTE A

FOR EVERY TWO TERMINATED HORIZONTAL BARS PROVIDE ONE ADDITIONAL HORIZONTAL BAR EACH SIDE OF PENETRATION (BUNDLED TO TYPICAL WALL REINFORCEMENT). BAR LENGTH TO BE PENETRATION WIDTH AND TWO LAP LENGTHS.

NOTE B

FOR EVERY TWO TERMINATED VERTICAL BARS, PROVIDE ONE ADDITIONAL FULL HEIGHT VERTICAL BAR AND STARTER BAR EACH SIDE OF PENETRATION BLOCKOUT (BUNDLED TO TYPICAL WALL REINFORCEMENT) TO PROVIDE 100% COMPENSATION FOR CURTAILED REINFORCEMENT.

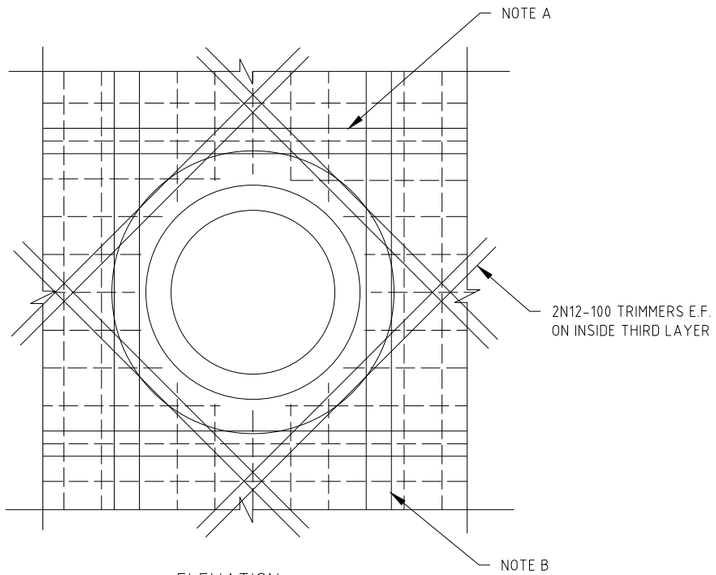

ELEVATION

PIPE CAST-IN DETAIL (WITH PUDDLE FLANGE)
NOT TO SCALE

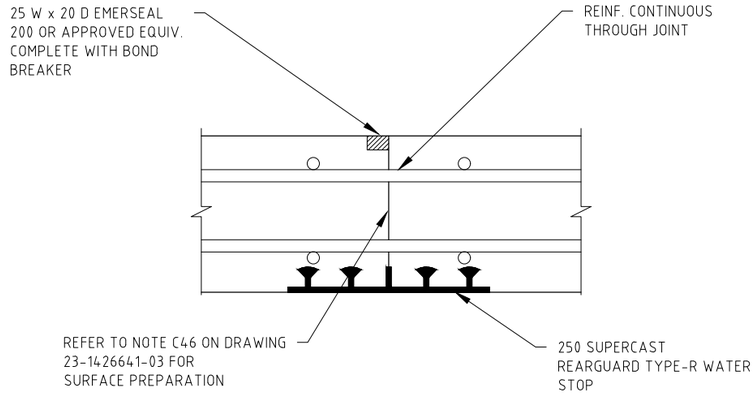

SLAB CONSTRUCTION JOINT DETAIL
NOT TO SCALE

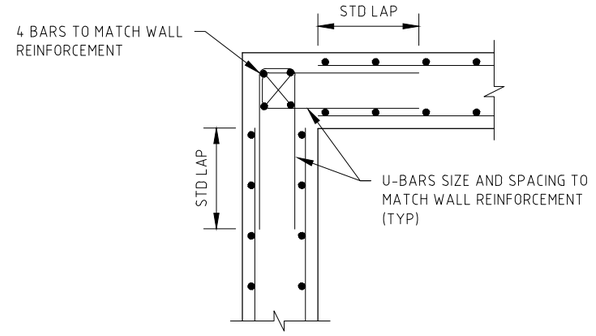

TYPICAL WALL CORNER DETAIL
FOR VALVE CHAMBER
NOT TO SCALE

No.	REVISION DETAILS	DWN	DATE
0	ISSUED FOR TENDER	RK	16.04.21

CONSULTANT DETAILS:
GHD
2/57 Graham Street
Nowra NSW 2541
T 61 2 4424 4900 F 61 2 4424 4999
www.ghd.com

CONSULT. REFERENCE No.
23-14266-41-27

Shoalhaven Water
A Group of Shoalhaven City Council

DESIGNED: KS	DATE: 10.07.15	COMPANY: GHD	
DRAWN: AK	DATE: 10.07.15	COMPANY: GHD	
CHECKED: MS	DATE: 01.04.21	COMPANY: GHD	
APPROVED: CS	DATE: 16.04.21	COMPANY: GHD	

TITLE:
SHOALHAVEN WATER
ST ANNS PUMPING STATION UPGRADE

TYPICAL DETAILS

SIZE	SCALE	INDEX No.	DRAWING No.	SHEET	REV No.
A3	1:25		23-1426641-27		0

Plot Date: 15/04/21 - 00:27 Cad File: C:\CAD\temp\AcPublish_811544\23-1426641-27.dwg

PUMPING STATIONS ELECTRICAL SERVICES DRAWINGS

ELECTRICAL DRAWING LIST	
DRG. No.	DRAWING TITLE
23-14266-41-200	DRAWING LIST
23-14266-41-201	SCA - SINGLE LINE DIAGRAM SHEET 1 OF 2
23-14266-41-202	SCA - SINGLE LINE DIAGRAM SHEET 2 OF 2
23-14266-41-204	DISTRIBUTION SINGLE LINE DIAGRAM
23-14266-41-205	TELEMETRY INTERFACE DETAILS
23-14266-41-206	INCOMING POWER SUPPLY SCHEMATIC DIAGRAM
23-14266-41-207	MOTOR STARTER CIRCUIT DIAGRAM SHEET 1 OF 3
23-14266-41-208	MOTOR STARTER CIRCUIT DIAGRAM SHEET 2 OF 3
23-14266-41-209	MOTOR STARTER CIRCUIT DIAGRAM SHEET 3 OF 3
23-14266-41-211	AUTO CONTROL DISTRIBUTION SCHEMATIC DIAGRAM SHEET 1 OF 2
23-14266-41-212	AUTO CONTROL DISTRIBUTION SCHEMATIC DIAGRAM SHEET 2 OF 2
23-14266-41-213	INSTRUMENTATION LOOPS
23-14266-41-214	AUTO CONTROL I/O MODULE SCHEMATIC DIAGRAM SHEET 1 OF 5
23-14266-41-215	AUTO CONTROL I/O MODULE SCHEMATIC DIAGRAM SHEET 2 OF 5
23-14266-41-216	AUTO CONTROL I/O MODULE SCHEMATIC DIAGRAM SHEET 3 OF 5
23-14266-41-217	AUTO CONTROL I/O MODULE SCHEMATIC DIAGRAM SHEET 4 OF 5
23-14266-41-218	AUTO CONTROL I/O MODULE SCHEMATIC DIAGRAM SHEET 5 OF 5
23-14266-41-219	TYPICAL GENERATOR CONNECTION BOX DETAILS
23-14266-41-225	SITE LAYOUT
23-14266-41-226	
23-14266-41-227	TYPICAL SWITCHROOM DETAILS SHEET 1 OF 2
23-14266-41-228	TYPICAL SWITCHROOM DETAILS SHEET 2 OF 2
23-14266-41-229	TYPICAL AREA LIGHTING COLUMN DETAILS
23-14266-41-230	VSD BACK CHANNEL COOLING INST, DUCT, IN-BACK/OUT-BACK D1H DETAILS SHEET 1 OF 2
23-14266-41-231	VSD BACK CHANNEL COOLING INST, DUCT, IN-BACK/OUT-BACK D1H DETAILS SHEET 2 OF 2
23-14266-41-232	TYPICAL VSD BACK-CHANNEL COOLING INSTALLATION DETAILS
23-14266-41-401	CABLE SHEDULE SHEET 1 OF 3
23-14266-41-402	CABLE SHEDULE SHEET 2 OF 3
23-14266-41-403	CABLE SHEDULE SHEET 2 OF 3
23-14266-41-501	SCA CABLE ZONE B0 INTERCONNECTION DIAGRAM
23-14266-41-502.1	SCA CABLE ZONE D0 INTERCONNECTION DIAGRAM (1 OF 4)
23-14266-41-502.2	SCA CABLE ZONE D0 INTERCONNECTION DIAGRAM (2 OF 4)
23-14266-41-502.3	SCA CABLE ZONE D0 INTERCONNECTION DIAGRAM (3 OF 4)
23-14266-41-502.4	SCA CABLE ZONE D0 INTERCONNECTION DIAGRAM (4 OF 4)
23-14266-41-503	SCA CABLE ZONE G0 INTERCONNECTION DIAGRAM
23-14266-41-504	PUMP No.1 VSD INTERCONNECTION DIAGRAM
23-14266-41-505	PUMP No.2 VSD INTERCONNECTION DIAGRAM
23-14266-41-506	TELEMETRY RTU INTERCONNECTION DIAGRAM
23-14266-41-507	FLOWMETER INTERCONNECTION DIAGRAM
23-14266-41-601	TYPICAL PUMPING STATION B3 SCA GENERAL ARRANGEMENT
23-14266-41-602	TYPICAL PUMPING STATION B3 SCA GENERAL ARRANGEMENT - NO DOORS
23-14266-41-603	TYPICAL PUMPING STATION B3 SCA SECTIONS
23-14266-41-604	TYPICAL PUMPING STATION B3 SCA EQUIPMENT LAYOUT - EXTERNAL
23-14266-41-605	TYPICAL PUMPING STATION B3 SCA EQUIPMENT LAYOUT - INTERNAL
23-14266-41-606-1	TYPICAL PUMPING STATION B3 EQUIPMENT SCHEDULE (1 OF 3)
23-14266-41-606-2	TYPICAL PUMPING STATION B3 EQUIPMENT SCHEDULE (2 OF 3)
23-14266-41-606-3	TYPICAL PUMPING STATION B3 EQUIPMENT SCHEDULE (3 OF 3)

No.	REVISION DETAILS	DWN	DATE
0	ISSUED FOR TENDER	RK	16.04.21

CONSULTANT DETAILS:
GHD
57 Graham Street Nowra NSW 2541
T 61 2 4424 4900 F 61 2 4424 4999
E noamail@ghd.com W www.ghd.com
CONSULTANT REFERENCE No.

Shoalhaven Water
A Group of Shoalhaven City Council

DESIGNED: CP	DATE: 21.07.15	COMPANY: GHD	
DRAWN: CC	DATE: 21.07.15	COMPANY: GHD	
CHECKED: DB	DATE: 16.12.15	COMPANY: GHD	
APPROVED: CS	DATE: 16.04.21	COMPANY: GHD	

TITLE:
SHOALHAVEN WATER
ST ANNS PUMPING STATION UPGRADE
ELECTRICAL SERVICES
DRAWING LIST

SIZE	SCALE	INDEX No.	DRAWING No.	SHEET	REV No.
A1	N.T.S.		23-1426641	200	0

Plot Date: 15/04/21 - 19:25 Cad File: C:\CAD\temp\AcPublish_630924\23-1426641-200.dwg

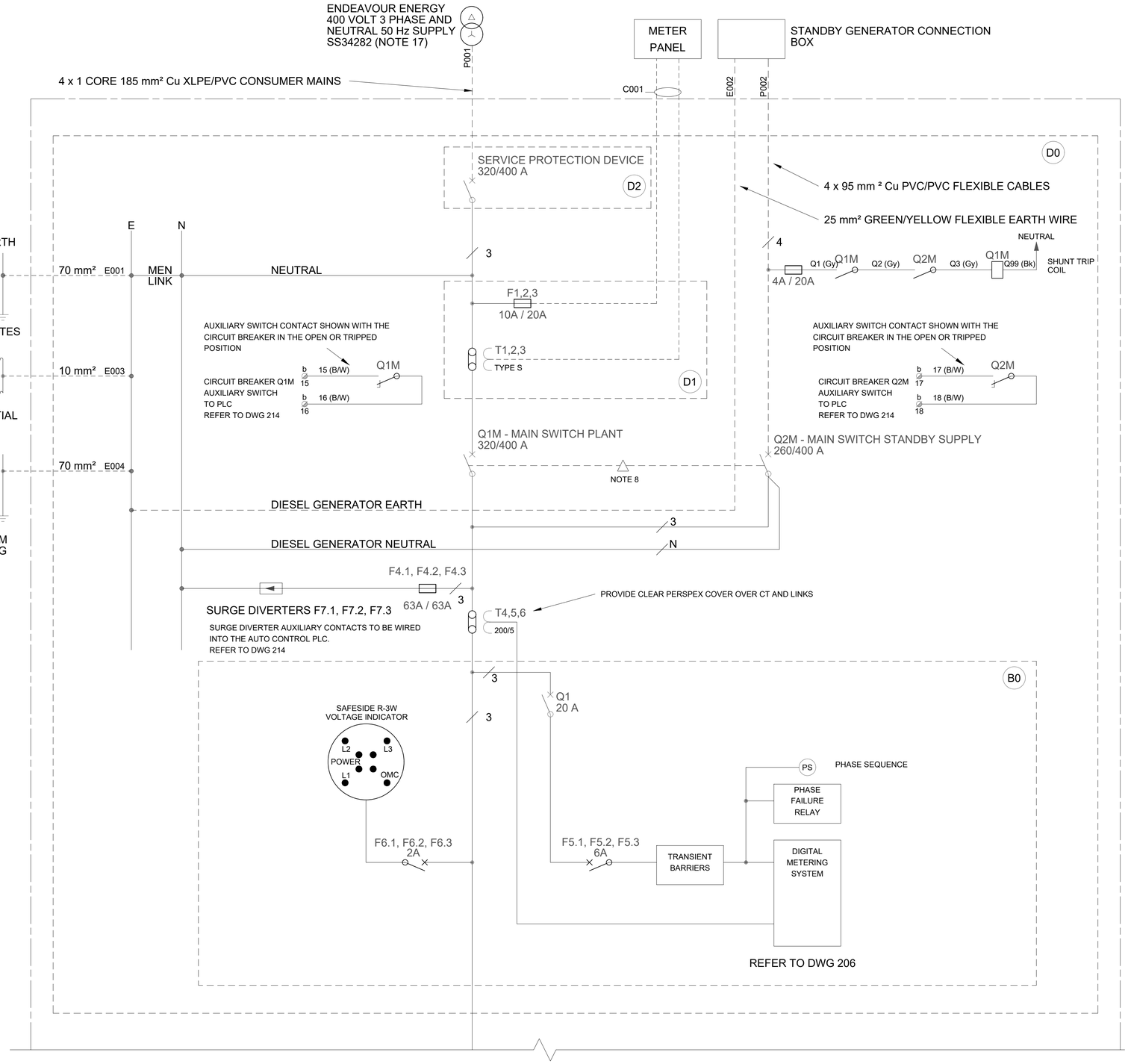

SINGLE LINE DIAGRAM NOTES

1 THE SCA SHALL BE CAPABLE OF WITHSTANDING A FAULT LEVEL OF 30 kA AT THE INCOMING TERMINALS. THE BUSBARS ON THE LINE AND LOAD SIDES OF THE MAIN SWITCHES, SHALL HAVE AN INTRINSICALLY RATED FAULT LEVEL OF 30kA.

2 FAULT CURRENT LIMITING BY CASCADE PROTECTION OF CIRCUIT BREAKERS MAY BE CARRIED OUT PROVIDED THAT THE CIRCUIT BREAKERS PROVIDE TOTAL DISCRIMINATION - THAT IS THE DOWN STREAM CIRCUIT BREAKER WILL TRIP BEFORE THE UPSTREAM CIRCUIT BREAKER.

3 SCA SHALL BE CONSTRUCTED IN ACCORDANCE WITH THE REQUIREMENTS OF A SERIES 'DT' SWITCHBOARD, WITH FORM 3b SEGREGATION. THE SCA IS REQUIRED TO BE TYPE TESTED TO THE REQUIREMENTS OF MEW E101 AND AS 3439.1. THE SCA SHALL HAVE A DEGREE OF PROTECTION OF IP51 AFTER INSTALLATION. IN ACCORDANCE WITH THE MANUFACTURERS INSTRUCTIONS.

4 THE COMMON EARTH ELECTRODE SHALL COMPLY WITH THE REQUIREMENTS OF AS 3000 AND AS 1768. THE RESISTANCE TO EARTH IS REQUIRED TO BE LESS THAN 10 OHMS. CARRY OUT EARTH RESISTANCE TESTING TO VERIFY THE RESISTANCE TO EARTH IS LESS THAN 10 OHMS. WHERE THE RESISTANCE TO EARTH IS GREATER THAN 10 OHMS ADDITIONAL EARTH ELECTRODES SHALL BE SUPPLIED AND INSTALLED. THE LOCATION AND METHOD OF INTERCONNECTION OF THE EARTH ELECTRODES SHALL BE DETERMINED ON SITE IN CONSULTATION WITH THE PRINCIPAL. IF ADDITIONAL EARTH ELECTRODES ARE REQUIRED THE ELECTRODES SHALL BE A VARIATION TO CONTRACT.

5 THE STANDBY DIESEL GENERATOR SHALL BE CONNECTED TO THE SCA IN ACCORDANCE WITH THE REQUIREMENTS OF THE LOCAL ENERGY AUTHORITY. PROVIDE ALL LABELLING AS DETAILED IN THE NEW SOUTH WALES SERVICES AND INSTALLATION RULES AND AS REQUIRED BY THE LOCAL ENERGY AUTHORITY.

6 THE INSTALLATION SHALL COMPLY WITH THE REQUIREMENTS OF AS 3010.1 - ELECTRICAL INSTALLATION - SUPPLY BY GENERATING SET, PART 1: INTERNAL COMBUSTION ENGINE DRIVEN SET.

7 THE CIRCUIT BREAKERS SHALL BE GRADED TO PROVIDE CO-ORDINATION WITH THE LOCAL ENERGY AUTHORITY'S PROTECTION EQUIPMENT, MAIN SWITCHES AND DOWN STREAM CIRCUIT BREAKERS. THE CONTRACTOR SHALL CONFIRM ALL CIRCUIT BREAKER SIZES AND SETTINGS AND SUBMIT CO-ORDINATION CURVES FOR THE INSTALLATION.

8 Q1M (MAIN SWITCH) AND Q2M SHALL BE MECHANICALLY INTERLOCKED SO THAT ONLY ONE BREAKER CAN BE "CLOSED" AT ANY GIVEN TIME.

9 SURGE DIVERTERS SHALL BE EQUAL TO NOVARIS SD3-120.

10 THE SURGE DIVERTERS SHALL BE INSTALLED TO THE MANUFACTURER'S RECOMMENDATIONS IN THE NON-PREFERRED 'T' TYPE CONNECTION. SUPPLY AND INSTALL FUSE PROTECTION TO THE 'T' CABLES. WIRING FROM BUSBARS TO FUSES & FUSES TO SURGE DIVERTERS SHALL EACH NOT EXCEED 100 mm.

11 VARIABLE SPEED DRIVES MOTOR STARTERS SHALL HAVE TYPE '2' CO-ORDINATION. SUBMIT DATA FROM SWITCHGEAR SUPPLIER CONFIRMING TYPE '2' CO-ORDINATION BETWEEN THE CIRCUIT BREAKER, CONTACTOR, SEMICONDUCTOR FUSES IF APPLICABLE AND THE VARIABLE SPEED DRIVE.

12 THE RATING OF THE MOTOR STARTERS, IN TERM OF kW AND CURRENT, SHALL CONSTITUTE THE LOWEST PERMISSIBLE OFFERED RATING OF ALL CURRENT CARRYING PARTS OF THE EQUIPMENT OFFERED. THE BASIS OF CONDUCTOR AREA SIZING SHALL BE THAT, WITH AN AMBIENT TEMPERATURE OF 45 °C AND A FLOW OF MAXIMUM POSSIBLE LOAD CURRENT, THE CONDUCTOR TEMPERATURE SHALL BE LOWER THAN 75°C.

13 THE DRAWINGS INDICATE FULL SIZE NEUTRAL CONDUCTOR FOR THE CONSUMERS MAINS. THE CURRENT-CARRYING CAPACITY OF THE NEUTRAL CONDUCTOR MAY BE REDUCED IN ACCORDANCE WITH THE REQUIREMENTS OF AS 3000 TAKEN INTO ACCOUNT THE HARMONIC CURRENTS GENERATED.

14 THE CABLE SIZES INDICATED ON THE DRAWING HAVE BEEN CALCULATED WITHOUT ANY DERATING FACTORS. WHERE THE INSTALLATION CONDITIONS RESULT IN CABLES BEING DERATED, THE CABLE SIZES SHALL BE RECALCULATED IN ACCORDANCE WITH THE REQUIREMENTS OF AS 3008.1.

15 THE CABLING FOR THE MOTOR POWER, SEAL FAILURE AND MOTOR THERMAL SWITCHES SHALL BE INTEGRALLY ATTACHED TO THE RESPECTIVE SUBMERSIBLE PUMP-MOTOR ASSEMBLY. THESE CABLE SHALL BE FLEXIBLE, SCREENED SUBMERSIBLE CABLES IN ACCORDANCE WITH THE SPECIFICATION.

16 THE AS-INSTALLED CONDUCTOR SIZE FOR ALL INTEGRALLY ATTACHED CONTROL AND POWER CABLING SHALL BE USED TO REPLACE THE ENTRIES "XXX" AS PART OF THE WORK AS EXECUTED DRAWINGS.

17 CURRENT L3 DESIGN (AKH DESIGN SERVICES P/L 11TH FEB 2016 REV A) IS NOT CERTIFIED. THE FINAL LV CIRCUIT FUSES CURRENTLY SHOWN AS 250A WILL NEED TO BE REVISED ACCORDING TO THE MAXIMUM DEMAND. THE CONSUMER MAINS SHOWN IS INDICATIVE ONLY. CONSUMER MAINS WILL NEED TO BE SIZED BY THE ELECTRICAL INSTALLATION CONTRACTOR ACCORDING TO THE EXACT LOCATION OF POINT OF ATTACHMENT (ROUTE LENGTH) AND ACTUAL MAXIMUM DEMAND.

18 ALL CABLING RUN/ROUTED UNDERNEATH SWITCHROOM FLOOR SHALL BE CORRECTLY SEGREGATED ADEQUATELY SIZED CABLE LADDER/TRAY SHALL BE USED. CABLE LADDER/TRAY SHALL BE DEDICATED TO VOLTAGE/SIGNAL TYPE. SEPARATE CABLE LADDER/TRAY SHALL BE USED FOR LV, ELV AND INSTRUMENT SIGNALS. ALL CABLE LADDER/TRAY SHALL BE TIED TO EARTH BY SUITABLY SIZED EARTH STRAP CONDUCTOR.

19 NEUTRALS IN DISTRIBUTION BOARDS TO BE APPROPRIATELY IDENTIFIED IN ACCORDANCE WITH AS 3000 AND LOGICALLY ORDERED IN NEUTRAL BAR.

No.	REVISION DETAILS	DWN	DATE
0	ISSUED FOR TENDER	RK	16.04.21

CONSULTANT DETAILS:
GHD
57 Graham Street Nowra NSW 2541
T 61 2 4424 4900 F 61 2 4424 4999
E noamail@ghd.com W www.ghd.com
CONSULTANT REFERENCE No.

Shoalhaven Water
A Group of Shoalhaven City Council

DESIGNED: CP	DATE: 21.07.15	COMPANY: GHD	
DRAWN: CC	DATE: 21.07.15	COMPANY: GHD	
CHECKED: DB	DATE: 16.12.15	COMPANY: GHD	
APPROVED: CS	DATE: 16.04.21	COMPANY: GHD	

TITLE:
SHOALHAVEN WATER
ST ANNS PUMPING STATION UPGRADE
ELECTRICAL SERVICES
SCA - SINGLE LINE DIAGRAM
SHEET 1 OF 2

SIZE	SCALE	INDEX No.	DRAWING No.	SHEET	REV No.
A1	N.T.S.		23-1426641	201	0

Plot Date: 15/04/21 - 19:25 Cad File: C:\CAD\temp\AcPublish_630924\23-1426641-201.dwg

NOTES

1 NEUTRALS IN DISTRIBUTION BOARDS TO BE APPROPRIATELY IDENTIFIED IN ACCORDANCE WITH AS 3000 AND LOGICALLY ORDERED IN NEUTRAL BAR.

VSD TO PUMP CABLE ROUTING DETAILS

CABLE	CONDUIT
P102A	9
P102B	10
C102, C202	11
P202A	11A
P202B	11B

*PROPRIETARY POWER CABLES FROM PUMPS TO VSDs SHALL BE RUN IN SEPERATE CONDUITS TO LIMIT CABLE DE-RATING

CABLE SCHEDULE

DRIVE	CABLE SIZE
SCA TO VSD	3 CORE + E 70 mm² XLPE/PVC/CIR POWER
SCA TO PUMP NO-FLOW SWITCH	1PR + SCN 1.5 mm² OVERALL FOIL SCREEN WITH DRAIN WIRE CONTROL

INTERCONNECTING CONTROL WIRING BETWEEN THE MOTOR STARTERS, AUTO CONTROL AND THE VARIABLE SPEED DRIVES NOT INDICATED.

ALL LOW VOLTAGE INTERFACES (EG. FIELD ISOLATORS) SHALL BE INTERFACED USING PVC/PVC/CIR CONTROL CABLES.

WHERE DRIVES ARE SUPPLIED WITH ADDITIONAL PROTECTION DEVICES THAN THAT INDICATED ON THE DRAWINGS SUPPLY AND INSTALL A SCREENED CABLE WITH ADEQUATE NUMBER OF CONTROL CORES.

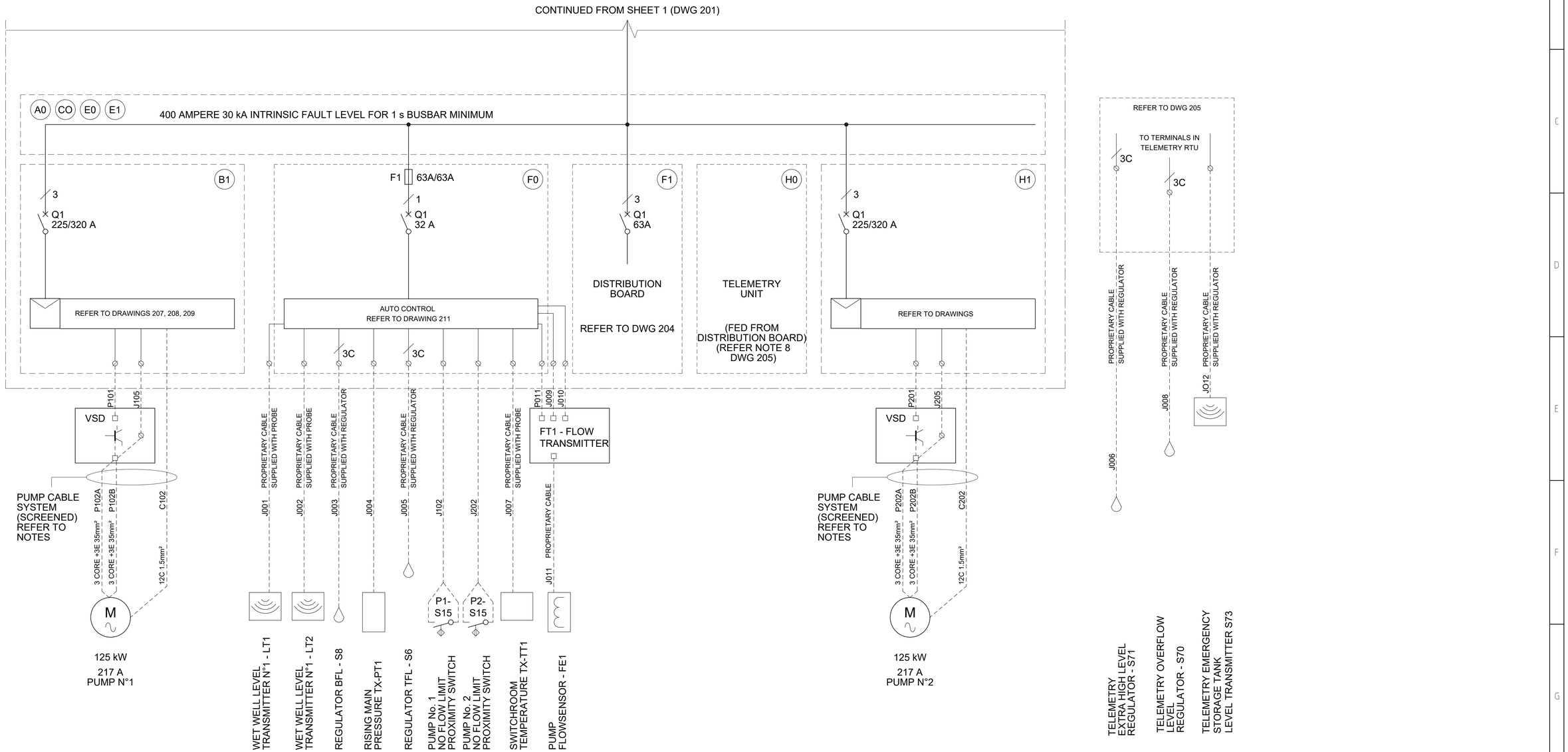

No.	REVISION DETAILS	DWN	DATE
0	ISSUED FOR TENDER	RK	16.04.21

CONSULTANT DETAILS:
GHD
57 Graham Street Nowra NSW 2541
T 61 2 4424 4900 F 61 2 4424 4999
E noamail@ghd.com W www.ghd.com
CONSULTANT REFERENCE No.

Shoalhaven Water
A Group of Shoalhaven City Council

DESIGNED: CP	DATE: 21.07.15	COMPANY: GHD	
DRAWN: CC	DATE: 21.07.15	COMPANY: GHD	
CHECKED: DB	DATE: 16.12.15	COMPANY: GHD	
APPROVED: CS	DATE: 16.04.21	COMPANY: GHD	

TITLE:
SHOALHAVEN WATER
ST ANNS PUMPING STATION UPGRADE
ELECTRICAL SERVICES
SCA - SINGLE LINE DIAGRAM
SHEET 2 OF 2

SIZE	SCALE	INDEX No.	DRAWING No.	SHEET	REV No.
A1	N.T.S.		23-1426641	202	0

Plot Date: 15/04/21 - 19:25 Cad File: C:\CAD\temp\AcPublish_630924\23-1426641-202.dwg

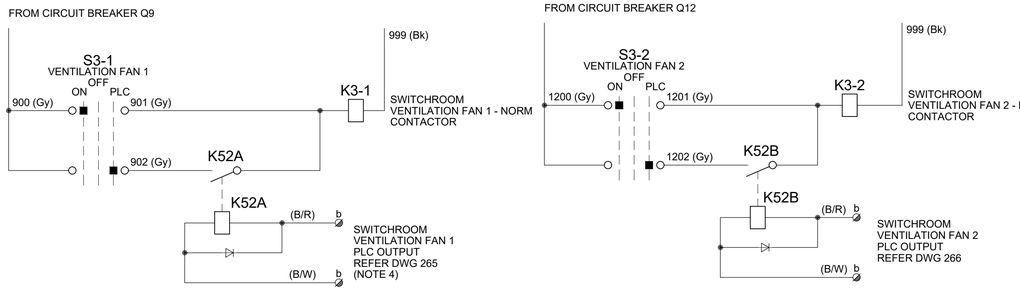

SWITCHROOM VENTILATION FAN CONTROL

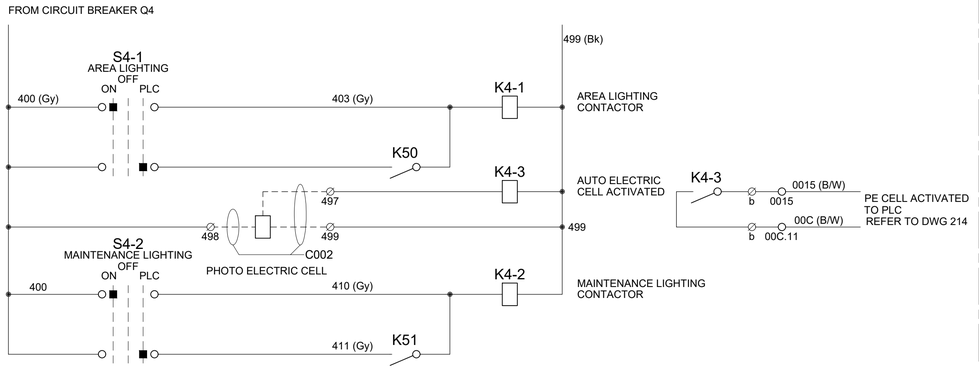

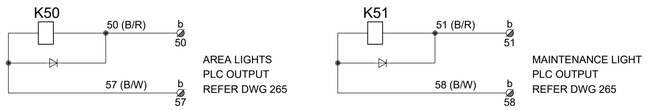

AREA LIGHTING CONTROL

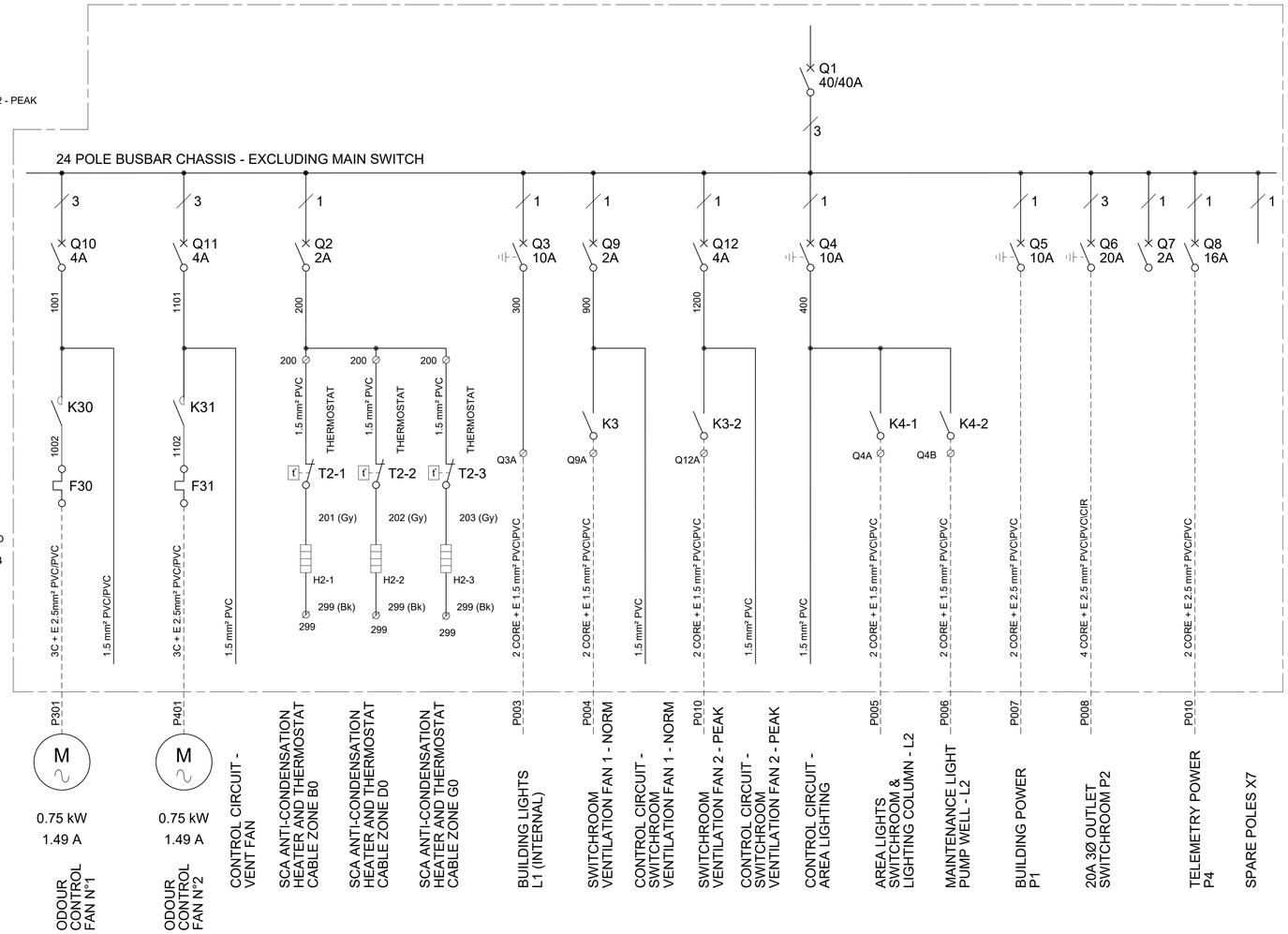

DISTRIBUTION BOARD SINGLE LINE DIAGRAM

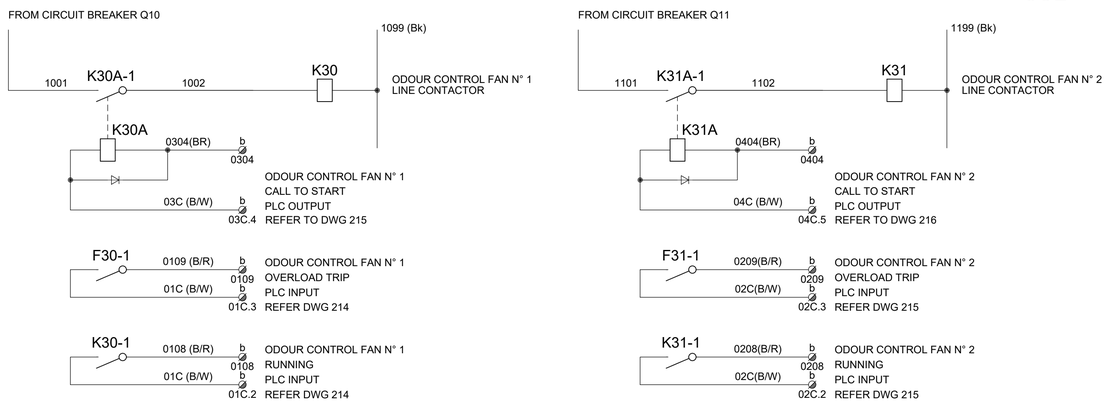

ODOUR FAN CONTROL

LEGEND

CIRCUIT BREAKER
× Q1
100/125 A

BREAKER FRAME SIZE
RATING

NOTES

1. CONDITIONAL FAULT RATING OF THE DISTRIBUTION BOARD SECTION OF THE SCA SHALL BE 10 kA.
2. THE CABLE SIZES INDICATED ON THE DRAWING HAVE BEEN DE-RATED ACCORDING TO THE INSTALLATION TYPE DESCRIBED IN THE CABLE SCHEDULE. REFER DWG 291. THE CONTRACTOR SHALL CHECK CABLE SIZING & DE-RATING TO ACTUAL INSTALLATION CONDITIONS IN ACCORDANCE WITH AS3008.1.
3. NEUTRALS IN DISTRIBUTION BOARDS TO BE APPROPRIATELY IDENTIFIED IN ACCORDANCE WITH AS 3000 AND LOGICALLY ORDERED IN NEUTRAL BAR.

No.	REVISION DETAILS	DWN	DATE
0	ISSUED FOR TENDER	RK	16.04.21

CONSULTANT DETAILS:
GHD
57 Graham Street Nowra NSW 2541
T 61 2 4424 4900 F 61 2 4424 4999
E noamail@ghd.com W www.ghd.com

CONSULTANT REFERENCE No.

Shoalhaven Water
A Group of Shoalhaven City Council

		DATE	COMPANY
DESIGNED:	CP	21.07.15	GHD
DRAWN:	CC	21.07.15	GHD
CHECKED:	DB	16.12.15	GHD
APPROVED:	CS	16.04.21	GHD

TITLE:
SHOALHAVEN WATER
ST ANNS PUMPING STATION UPGRADE
ELECTRICAL SERVICES
DISTRIBUTION SINGLE LINE DIAGRAM

SIZE	SCALE	INDEX No.	DRAWING No.	SHEET	REV No.
A1	N.T.S.		23-1426641	204	0

Plot Date: 15/04/21 - 19:26 Cad File: C:\CAD\temp\AcPublish_630924\23-1426641-204.dwg

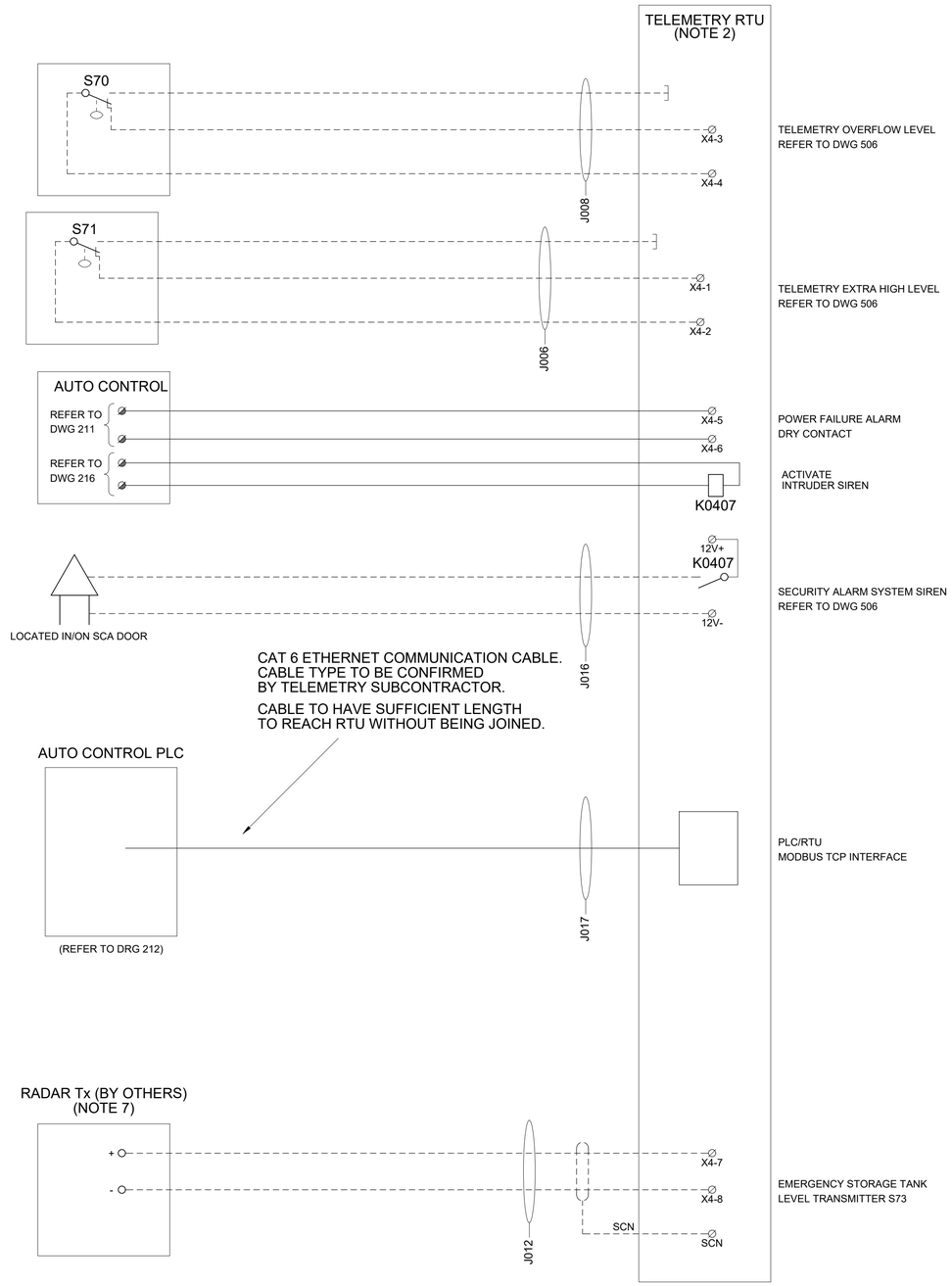

TELEMETRY INTERCONNECTION DETAILS

NOTES

1. EQUIPMENT TERMINAL NUMBERING SHALL COMPLY WITH IEC STANDARD 947.
2. TELEMETRY RTU LOCATED IN SCA ZONE F1.
3. ALL EXTRA LOW VOLTAGE TERMINALS SHALL BE BLUE IN COLOUR AND SHALL BE SEGREGATED BY MEANS OF SEGREGATION PLATES FROM LOW VOLTAGE TERMINALS.
4. ALL TERMINALS SHALL BE DIN RAILED MOUNTED.
5. ALL WIRES SHALL BE FITTED WITH CABLE MARKERS, WHERE THE WIRE NUMBER IS NOT INDICATED THE WIRE NUMBER SHALL AGREE WITH THE TERMINAL NUMBER OF THE TERMINAL OF WHICH THE WIRE IS INSERTED.
6. FOR WIRE COLOURS REFER TO THE DRAWINGS.
7. RADAR TRANSMITTER SUPPLIED AND INSTALLED BY OTHERS. CONTRACTOR TO SUPPLY, INSTALL AND TERMINATE CABLE.
8. FINAL TELEMETRY REQUIREMENTS TO BE ADVISED OR SHALL BE SUPPLIED BY SHOALHAVEN WATER.

PROPOSED PUMPING STATIONS TELEMETRY ALARMS TO BE OBTAINED FROM PLC BY MODBUS TCP COMMUNICATION LINK

FINAL SIGNALS TO BE CONFIRMED BY SHOALHAVEN WATER

STATUS SIGNALS - POWER SUPPLY

Q1M AUXILIARY STATUS
Q2M AUXILIARY STATUS
SURGE DIVERTERS ALARM
KILOWATT HOURS PULSE - kWh
REACTIVE POWER PULSE - kvar

STATUS SIGNALS - SEWAGE PUMPS

SEWAGE PUMP N°1 NOT AVAILABLE FOR PLC CONTROL
SEWAGE PUMP N°1 RUNNING
SEWAGE PUMP N°1 DRIVE FAULT
SEWAGE PUMP N°1 SEAL FAILURE

SEWAGE PUMP N°2 NOT AVAILABLE FOR PLC CONTROL
SEWAGE PUMP N°2 RUNNING
SEWAGE PUMP N°2 DRIVE FAULT
SEWAGE PUMP N°2 SEAL FAILURE

STATUS SIGNALS - SEWAGE PUMPS AUTO CONTROL

PUMP N°1 FAILED TO START
PUMP N°2 FAILED TO START

DUTY SELECTION - SEWAGE PUMPS

PUMP N°1 DUTY
PUMP N°2 DUTY
PUMP N°1 DUTY PUMP N°2 STANDBY
PUMP N°2 DUTY PUMP N°1 STANDBY
ALTERNATING DUTY SELECTED

STATUS SIGNALS - WELL LEVEL

TELEMETRY EXTRA-HIGH LEVEL (S71) REACHED
TELEMETRY OVERFLOW LEVEL (S70) REACHED
TOP WATER LEVEL (S6) REACHED
BOTTOM WATER LEVEL (S8) REACHED

LOGGING - WELL LEVEL

WELL LEVEL % FROM ANALOGUE LEVEL SENSOR LT1
WELL LEVEL % FROM ANALOGUE LEVEL SENSOR LT2

LOGGING - PUMP FLOW

PUMP FLOW FROM FLOWMETER
FLOW VOLUME (kL)

LOGGING - RISING MAIN PRESSURE

RISING MAIN PRESSURE TRANSMITTER (kPA)

STATUS SIGNALS - GENERAL

PLC FAULT
SWITCHROOM WARNING THERMOSTAT
PUMP STATION INHIBIT ON
FLOWMETER FAULT

BURGLAR ALARM SIGNALS

DOOR N°1 ALARM (REED) SWITCH
DOOR N°2 ALARM (REED) SWITCH
EXTERNAL KEY SWITCH

STATUS SIGNALS - ODOUR CONTROL FANS

ODOUR CONTROL FAN N° 1 NOT AVAILABLE FOR PLC CONTROL
ODOUR CONTROL FAN N° 1 RUNNING
ODOUR CONTROL FAN N° 1 FAULT
ODOUR CONTROL FAN N° 2 NOT AVAILABLE FOR PLC CONTROL
ODOUR CONTROL FAN N° 2 RUNNING
ODOUR CONTROL FAN N° 2 FAULT

STATUS SIGNALS - ODOUR CONTROL FANS AUTO CONTROL

ODOUR CONTROL FAN N° 1 FAILED TO START
ODOUR CONTROL FAN N° 2 FAILED TO START

LOGGING - EMERGENCY STORAGE TANK LEVEL

EMERGENCY STORAGE TANK LEVEL SENSOR S73

LOGGING - SWITCHROOM TEMPERATURE

SWITCHROOM TEMPERATURE SENSOR TT1

No.	REVISION DETAILS	DWN	DATE
0	ISSUED FOR TENDER	RK	16.04.21

CONSULTANT DETAILS:
GHD
57 Graham Street Nowra NSW 2541
T 61 2 4424 4900 F 61 2 4424 4999
E noamail@ghd.com W www.ghd.com
CONSULTANT REFERENCE No.

Shoalhaven Water
A Group of Shoalhaven City Council

DESIGNED: CP	DATE: 21.07.15	COMPANY: GHD	
DRAWN: CC	DATE: 21.07.15	COMPANY: GHD	
CHECKED: DB	DATE: 16.12.15	COMPANY: GHD	
APPROVED: CS	DATE: 16.04.21	COMPANY: GHD	

TITLE:
SHOALHAVEN WATER
ST ANNS PUMPING STATION UPGRADE
ELECTRICAL SERVICES
TELEMETRY INTERFACE DETAILS

SIZE	SCALE	INDEX No.	DRAWING No.	SHEET	REV No.
A1	N.T.S.		23-1426641	205	0

Plot Date: 15/04/21 - 19:26 Cad File: C:\CAD\temp\AcPublish_630924\23-1426641-205.dwg

NOTES

1 ALL EQUIPMENT IS DRAWN FOR PROPRIETARY TYPE UNITS. AMEND THE DRAWINGS TO SUIT THE ACTUAL EQUIPMENT TENDERED.

2 SURGE PROTECTION INDICATED IS THE MINIMUM. SUPPLY AND INSTALL ANY ADDITIONAL SURGE PROTECTION RECOMMENDED BY THE MANUFACTURER.

3 THE PHASE FAILURE/REVERSAL RELAY SHALL HAVE A CHANGEOVER CONTACT WITH A TIME DELAY ON ENERGISE AND DE-ENERGISE AND SHALL MONITOR PHASE ASYMMETRY, SEQUENCE AND LOSS OF PHASE. THE RELAY SHALL BE SUITABLE FOR MOTOR APPLICATIONS. THE RELAY SHALL BE EQUAL TO CARLO GAVAZZI DPB-02-C-M48.

4 THE POWER MONITOR COMPLETE SHALL BE PANEL MOUNTED AND EQUAL SCHNEIDER PM700P POWER MONITOR.

5 ALL TERMINALS SHALL BE TAGGED AT EACH SIDE SUCH THAT THE TAG AGREES EITHER WITH THE NUMBER OF THE WIRE WHICH IS INSERTED IN THAT SIDE OF THE TERMINAL OR WITH THE CIRCUIT DIAGRAM.

6 WIRE TERMINAL AND EQUIPMENT DESIGNATIONS INDICATED ON THE DRAWING ARE INDICATIVE ONLY AND MAY BE AMENDED TO SUIT THE EQUIPMENT AND SYSTEM LAYOUT.

7 ALL EQUIPMENT SHALL BE INSTALLED TO THE MANUFACTURER'S RECOMMENDATIONS.

8 TERMINATE THE EARTH TERMINAL OF THE SURGE PROTECTION DEVICE TO THE MAIN EARTH.

9 EQUIPMENT TERMINALS NUMBERING SHALL COMPLY WITH IEC STANDARD 947.

10 FOR WIRE COLOURS REFER TO THE DRAWINGS.

11 ALL EXTRA LOW VOLTAGE TERMINALS SHALL BE BLUE IN COLOUR.

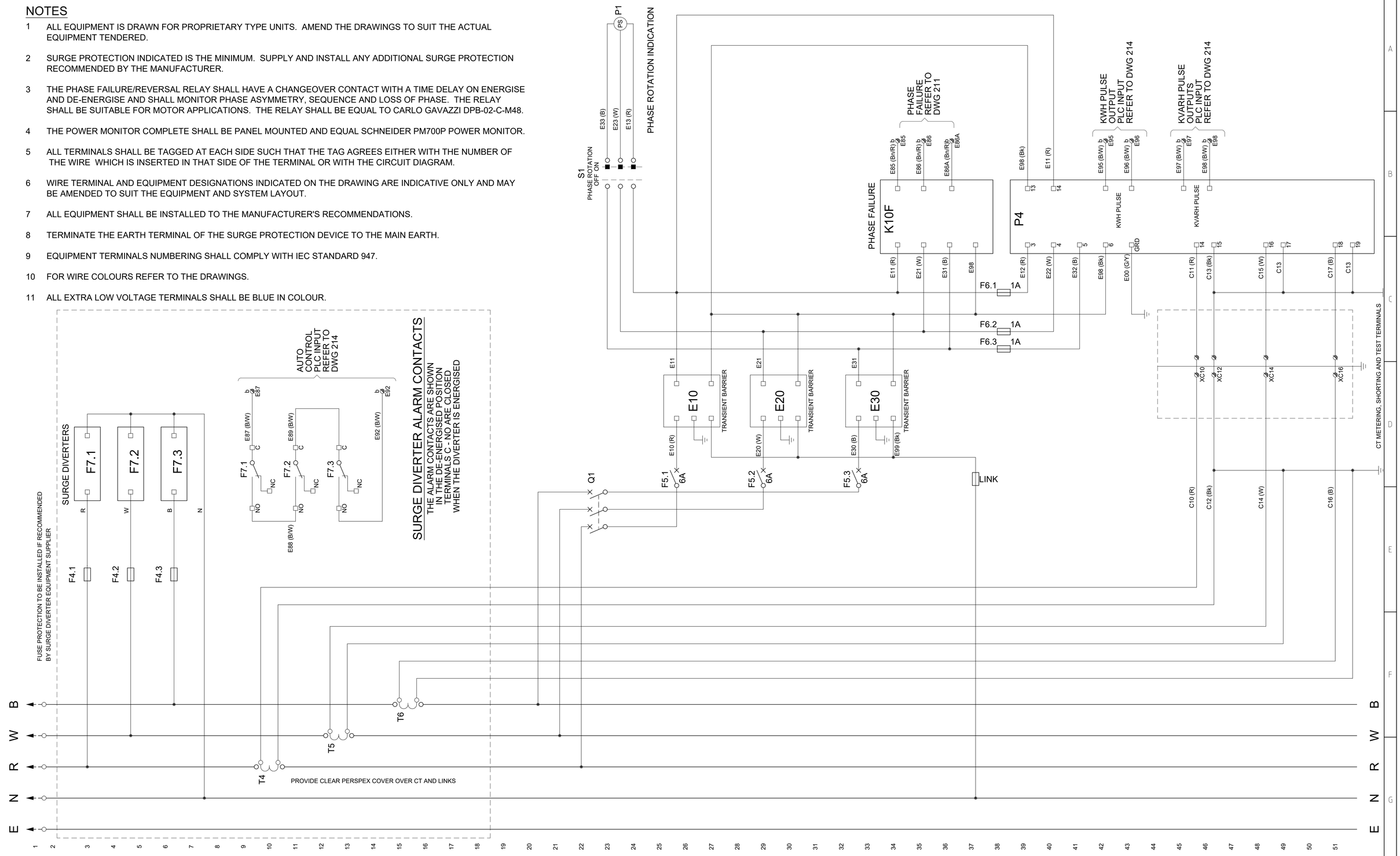

No.	REVISION DETAILS	DWN	DATE
0	ISSUED FOR TENDER	RK	16.04.21

CONSULTANT DETAILS:
GHD
57 Graham Street Nowra NSW 2541
T 61 2 4424 4900 F 61 2 4424 4999
E noamail@ghd.com W www.ghd.com

CONSULTANT REFERENCE No.

Shoalhaven Water
A Group of Shoalhaven City Council

DESIGNED: CP	DATE: 21.07.15	COMPANY: GHD	
DRAWN: CC	DATE: 21.07.15	COMPANY: GHD	
CHECKED: DB	DATE: 16.12.15	COMPANY: GHD	
APPROVED: CS	DATE: 16.04.21	COMPANY: GHD	

TITLE:
SHOALHAVEN WATER
ST ANNS PUMPING STATION UPGRADE
ELECTRICAL SERVICES
INCOMING POWER SUPPLY
SCHEMATIC DIAGRAM

SIZE	SCALE	INDEX No.	DRAWING No.	SHEET	REV No.
A1	N.T.S.		23-1426641	206	0

Plot Date: 15/04/21 - 19:26 Cad File: C:\CAD\temp\AcPublish_630924\23-1426641-206.dwg

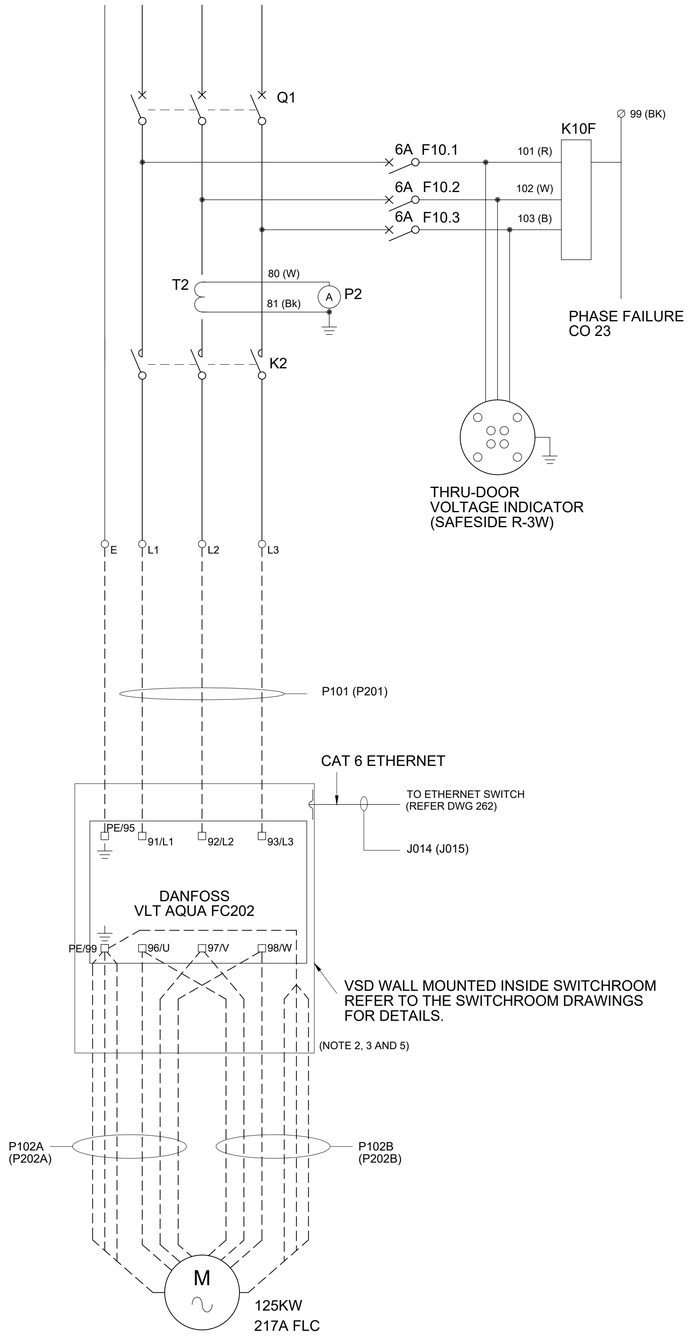

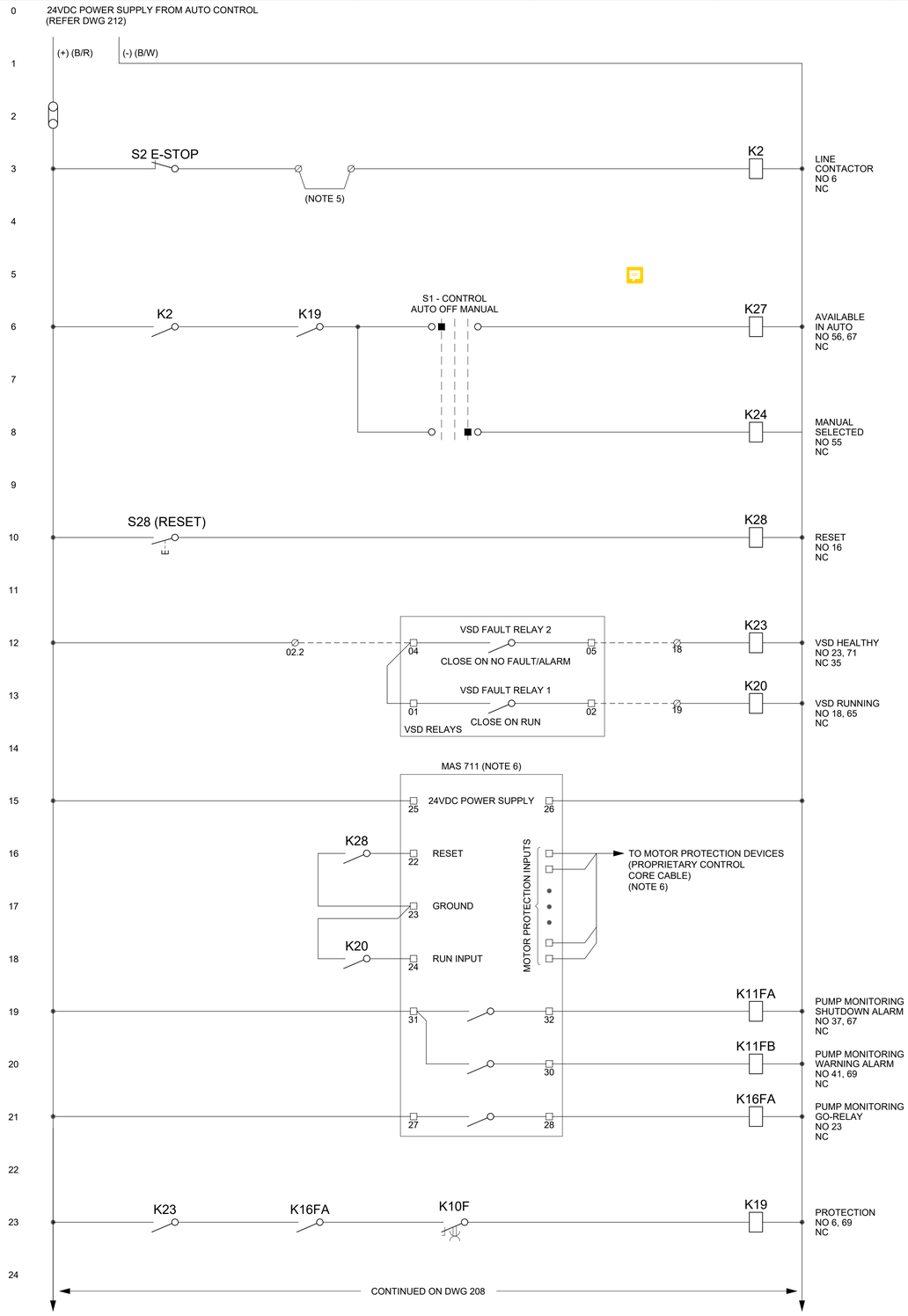

NOTES

1 REFER TO DWG 208 FOR GENERAL NOTES.

2 DANFOSS FC202 TO BE SUPPLIED WITH VLT ETHERNET/IP MCA 121 COMMUNICATIONS OPTION CARD AS WELL AS VLT 24VDC SUPPLY MCB 107 CONTROL POWER OPTION CARD.

3 DANFOSS FC202 C/W RFI FILTER/DC CHOKE AS STANDARD & BE A LOW HARMONIC VERSION.

4 CONTRACTOR SHALL ENSURE THE VSD DRIVE IS CONFIGURED/PROGRAMMED CORRECTLY BEFORE PUTTING DRIVE TO SERVICE.

5 BRIDGE TERMINALS WHERE FIELD EMERGENCY STOP IS NOT REQUIRED.

6 MOTOR PROTECTION INPUTS TO BE DETAILED ONCE PUMP PROTECTION REQUIREMENTS ARE DEFINED. THESE MAY INCLUDE THERMSTOR, BEARING, VIBRATION AND LEAKAGE PROTECTION FEATURES. CONTROL CORES WILL BE CONTAINED WITHIN THE PUMP/MOTORS PROPRIETARY, SCREENED CABLE.

7 THE VLTS SHALL BE ORDERED WITH DANFOSS PROPRIETARY BACK-CHANNEL COOLING KIT PART N° 176F3648.

8 FOR VLT WALL INSTALLATION AND BACK-CHANNEL COOLING DETAILS, REFER TO DWGS 230 & 231.

9 HEAT LOSSES FROM VLTS SHALL BE EXHAUSTED EXTERNALLY VIA BACK-CHANNEL COOLING. REFER TO DWG 232.

No.	REVISION DETAILS	DWN	DATE
0	ISSUED FOR TENDER	RK	16.04.21

CONSULTANT DETAILS:
GHD
57 Graham Street Nowra NSW 2541
T 61 2 4424 4900 F 61 2 4424 4999
E noamail@ghd.com W www.ghd.com
CONSULTANT REFERENCE No.

Shoalhaven Water
A Group of Shoalhaven City Council

DESIGNED: CP	DATE: 21.07.15	COMPANY: GHD	
DRAWN: CC	DATE: 21.07.15	COMPANY: GHD	
CHECKED: DB	DATE: 16.12.15	COMPANY: GHD	
APPROVED: CS	DATE: 16.04.21	COMPANY: GHD	

TITLE:
SHOALHAVEN WATER
ST ANNS PUMPING STATION UPGRADE
ELECTRICAL SERVICES
MOTOR STARTER CIRCUIT DIAGRAM
SHEET 1 OF 3

SIZE	SCALE	INDEX No.	DRAWING No.	SHEET	REV No.
A1	N.T.S.		23-1426641	207	0

Plot Date: 15/04/21 - 19:27 Cad File: C:\CAD\temp\AcPublish_630924\23-1426641-207.dwg

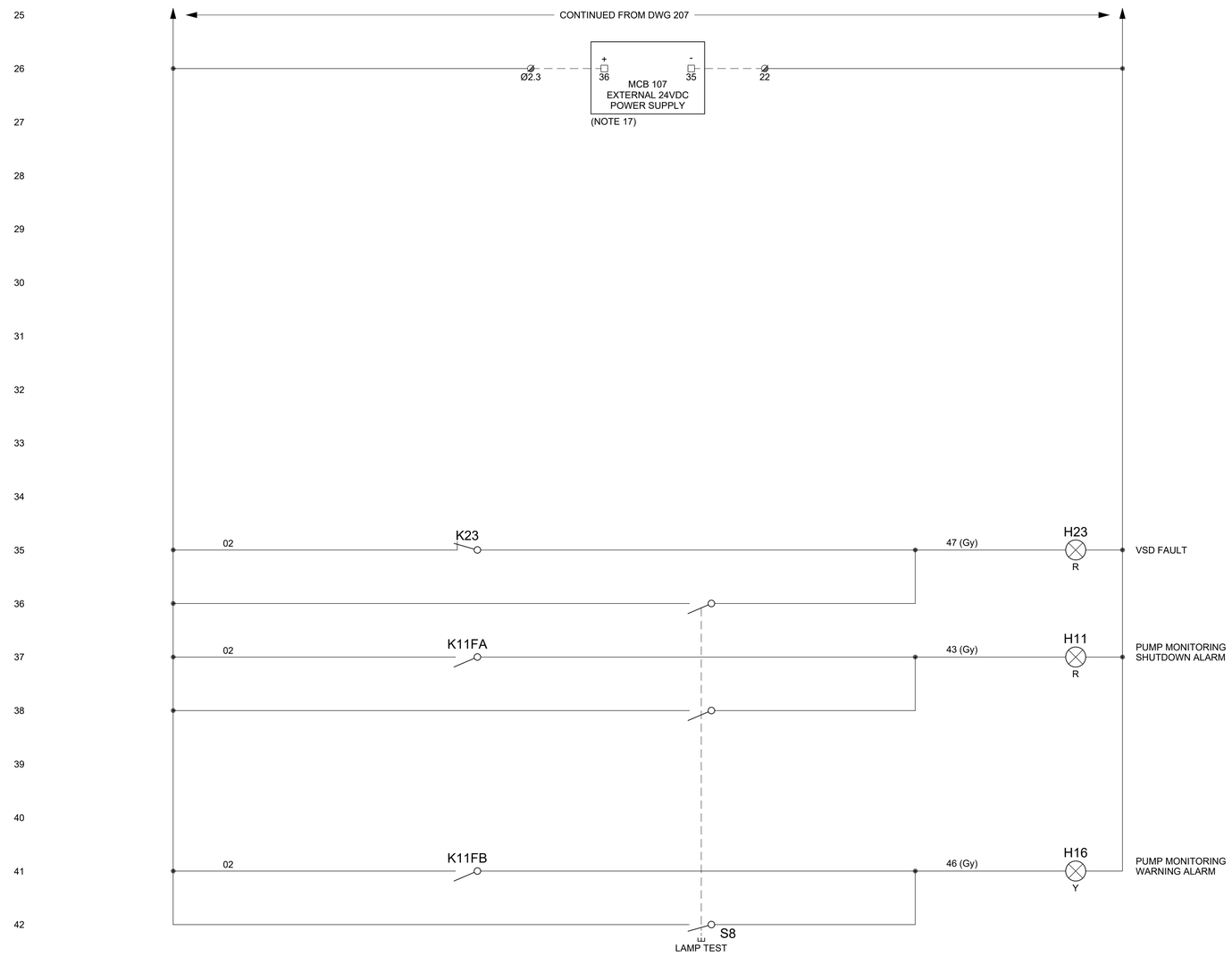

NOTES

1 REFER SINGLE LINE DIAGRAM FOR THE CONTINUATION OF WIRING.

2 EQUIPMENT TERMINALS NUMBERING SHALL COMPLY WITH IEC STANDARD 947.

3 ALL TERMINALS SHALL BE TAGGED AT EACH SIDE SUCH THAT THE TAG AGREES EITHER WITH THE NUMBER OF THE WIRE WHICH IS INSERTED IN THAT SIDE OF THE TERMINAL OR WITH THE CIRCUIT DIAGRAM.

4 SPARE NOTE

5 AN ENGRAVED, WHITE ON RED BACKGROUND, LABEL SHALL BE FITTED TO THE STARTER DOOR WHICH SHALL BEAR THE FOLLOWING INSCRIPTION :
"TO ISOLATE THE CONTROL CIRCUIT ONLY SWITCH OFF CONTROL CIRCUIT BREAKER Q3x". 'x' TO BE REPLACED WITH '8' FOR PUMP 1 AND '9' FOR PUMP 2.

6 FOR WIRE COLOURS REFER TO DRAWINGS.

7 THE PHASE FAILURE/REVERSAL RELAY SHALL HAVE A CHANGEOVER CONTACT WITH A TIME DELAY ON ENERGISE AND DE-ENERGISE AND SHALL MONITOR PHASE ASYMMETRY, SEQUENCE AND LOSS OF PHASE. THE RELAY SHALL BE SUITABLE FOR MOTOR APPLICATIONS. THE RELAY SHALL BE EQUAL TO CARLO GAVAZZI DPB-02-C-M48.

8 THE PLC INTERFACE RELAYS SHALL BE INDUSTRIAL TYPE PLUG-IN COMPLETE WITH 2 CHANGE-OVER CONTACTS, RATED 2A, 240V AC15 MINIMUM WITH PRESS TO TEST BUTTON AND FLAG INDICATION.

9 THE RESISTANCE AND CAPACITANCE VALUES OF THE RELAYS AND CONTACTOR SUPPRESSOR MODULES R-C (RESISTOR-CAPACITOR) SHALL BE DETERMINED IN ACCORDANCE WITH THE MANUFACTURER'S RECOMMENDATIONS.

10 THE DRIVE IS SHOWN FOR A DANFOSS FC202 VARIABLE SPEED DRIVE COMPLETE WITH DC BUS CHOKE AND RFI FILTER / LOW HARMONIC OPTION.

11 THE VSD SHALL HAVE A DEGREE OF MINIMUM PROTECTION OF IP54.

12 THE VSD SWITCHING FREQUENCY SHALL BE 2 kHz.

13 THE VARIABLE SPEED DRIVE SHALL COMPLY WITH THE REQUIREMENTS OF AS 2279 PARTS 2 AND 4 - DISTURBANCE IN MAINS SUPPLY NETWORKS.

14 THE VSD CHOKES SHALL BE DESIGNED TO LIMIT THE HARMONIC DISTORTION TO LEVELS PERMITTED BY THE SUPPLY AUTHORITY.

15 THE VARIABLE SPEED DRIVE SHALL HAVE ELECTROMAGNETIC COMPATIBILITY (EMC) FILTERS TO THE REQUIREMENTS OF AS 61800.3 CATEGORY C1.

16 ALL CONTROL WIRING SHALL BE CARRIED OUT IN ACCORDANCE WITH THE MANUFACTURER'S RECOMMENDATIONS.

17 THE MCB 107 CONTROL POWER OPTION CARD SHALL BE FITTED INSIDE THE FC202 VLT TO PROVIDE BACK-UP 24VDC SUPPLY FROM AN EXTERNAL SUPPLY SHOULD THE VLT NOT BE MAINS POWERED.

No.	REVISION DETAILS	DWN	DATE
0	ISSUED FOR TENDER	RK	16.04.21

CONSULTANT DETAILS:
GHD
57 Graham Street Nowra NSW 2541
T 61 2 4424 4900 F 61 2 4424 4999
E noamail@ghd.com W www.ghd.com
CONSULTANT REFERENCE No.

Shoalhaven Water
A Group of Shoalhaven City Council

DESIGNED: CP	DATE: 21.07.15	COMPANY: GHD	
DRAWN: CC	DATE: 21.07.15	COMPANY: GHD	
CHECKED: DB	DATE: 16.12.15	COMPANY: GHD	
APPROVED: CS	DATE: 16.04.21	COMPANY: GHD	

TITLE:
SHOALHAVEN WATER
ST ANNS PUMPING STATION UPGRADE
ELECTRICAL SERVICES
MOTOR STARTER CIRCUIT DIAGRAM
SHEET 2 OF 3

SIZE	SCALE	INDEX No.	DRAWING No.	SHEET	REV No.
A1	N.T.S.		23-1426641	208	0

Plot Date: 15/04/21 - 19:27 Cad File: C:\CAD\temp\AcPublish_630924\23-1426641-208.dwg

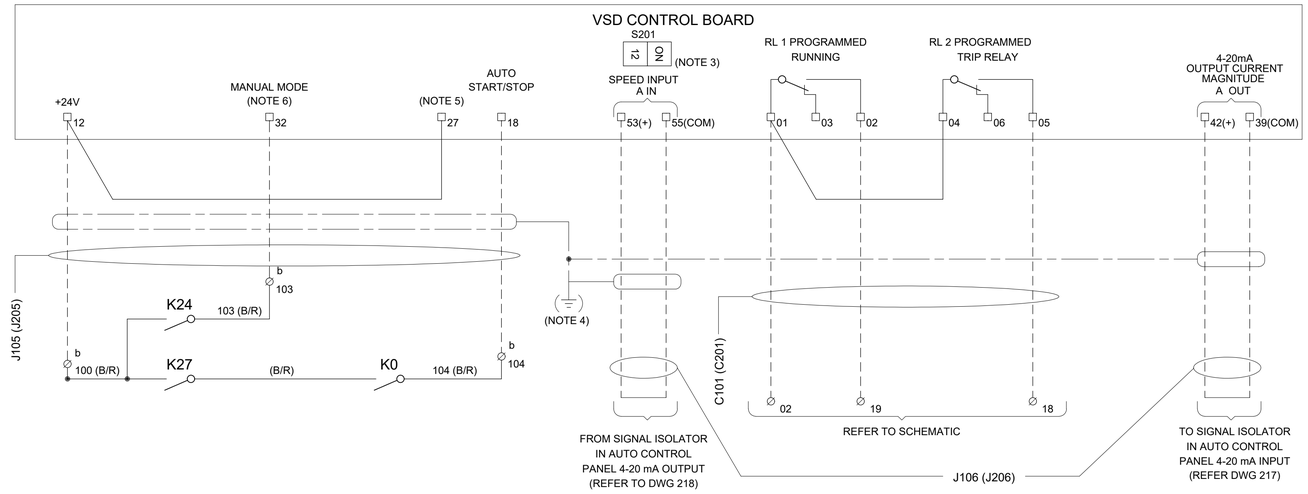

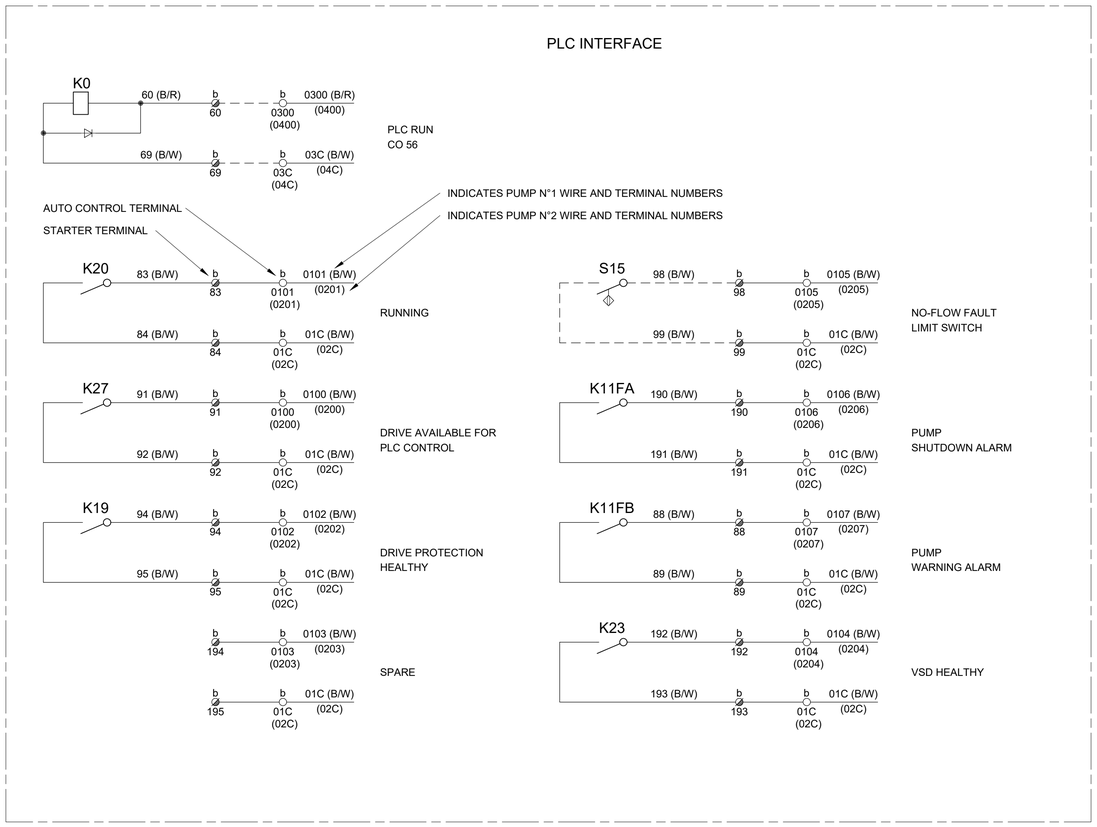

NOTES

1. REFER TO DWG 208 FOR GENERAL NOTES.
2. SWITCH S201 IS INTERNAL TO VSD AND SHOULD BE SET TO "ON" TO CONFIGURE THE SPEED REFERENCE INPUT AS A 4-20mA SIGNAL.
3. INSTRUMENT EARTH
4. A LINK MUST BE PROVIDED BETWEEN TERMINALS 12 AND 27 ON THE VSD CONTROL BOARD TO ALLOW DRIVE TO OPERATE. TERMINAL 27 DESIGNATED COAST INVERSE.
5. TERMNAL 18, 27, 32 ARE VSD DIGITAL INPUT SIGNALS.
6. WHEN CONTROL SWITCH S1 IS SELECTED TO "MANUAL", THE VSD SHALL BE PROGRAMMED TO SWITCH ACTIVE SETUPS TO ALLOW LOCAL START/STOP AND SPEED REFERENCE CONTROL. THE DRIVE PROTECTION RELAY K19 IS STILL FUNCTIONAL IN MANUAL CONTROL.

No.	REVISION DETAILS	DWN	DATE
0	ISSUED FOR TENDER	RK	16.04.21

CONSULTANT DETAILS:
GHD
57 Graham Street Nowra NSW 2541
T 61 2 4424 4900 F 61 2 4424 4999
E noamail@ghd.com W www.ghd.com
CONSULTANT REFERENCE No.

Shoalhaven Water
A Group of Shoalhaven City Council

DESIGNED: CP	DATE: 21.07.15	COMPANY: GHD	
DRAWN: CC	DATE: 21.07.15	COMPANY: GHD	
CHECKED: DB	DATE: 16.12.15	COMPANY: GHD	
APPROVED: CS	DATE: 16.04.21	COMPANY: GHD	

TITLE:
SHOALHAVEN WATER
ST ANNS PUMPING STATION UPGRADE
ELECTRICAL SERVICES
MOTOR STARTER CIRCUIT DIAGRAM
SHEET 3 OF 3

SIZE	SCALE	INDEX No.	DRAWING No.	SHEET	REV No.
A1	N.T.S.		23-1426641	209	0

Plot Date: 15/04/21 - 19:27 Cad File: C:\CAD\temp\AcPublish_630924\23-1426641-209.dwg

SUPPLEMENTARY SYMBOLS

QXX 16A — 30 mA EARTH LEAKAGE CIRCUIT BREAKER

NOTES

1 THE 240 VOLT a.c / 24 VOLT d.c. POWER SUPPLIES SHALL HAVE THE FOLLOWING FEATURES:
- RUN TIME MONITORING FUNCTION.
- UNDERVOLTAGE ALARM OUTPUT
- VOLTAGE AND CURRENT DISPLAY
- PEAK CURRENT MEMORY
- OVERLOAD PROTECTION
- OVERVOLTAGE PROTECTION
- SHORT CIRCUIT PROTECTION
- 25% SPARE CAPACITY

THE DC POWER SUPPLIES UNDERVOLTAGE ALARM TRANSISTOR OUTPUT SHALL BE INTERFACED TO THE PLC. REFER TO THE DRAWINGS FOR DETAILS.

2 THE DC POWER SUPPLIES CAPACITORS SHALL BE SIZED TO ALLOW THE FUSES TO OPERATE (BLOW) BEFORE THE POWER SUPPLIES FOLD BACK PROTECTION OPERATES.

3 FINAL STATION OPERATING LEVEL TO BE SET ON SITE DURING COMMISSIONING.

4 FOR ADDITIONAL NOTES REFER TO SHEET 2.

5 REFER TO DWG 206 FOR PHASE FAILURE RELAY CONNECTIONS.

6 ALARM CONTACTS FOR E2, E21 AND E22 WIRED IN SERIES TO SINGLE PLC INPUT.

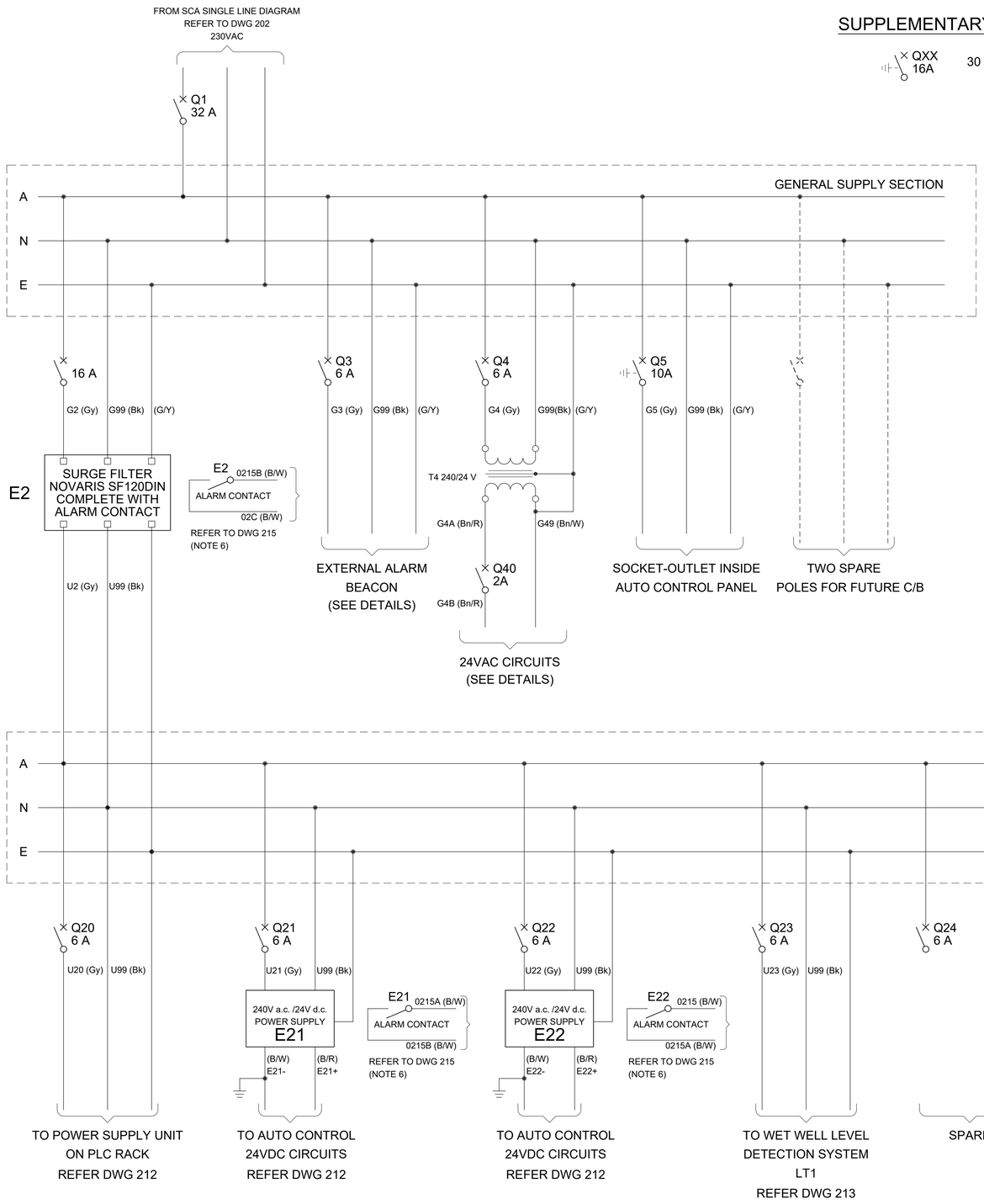

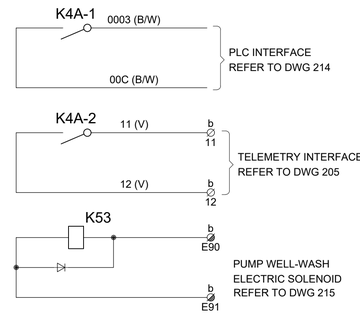

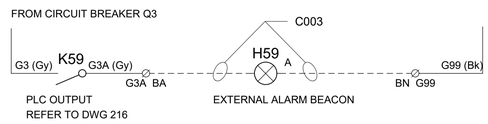

EXTERNAL ALARM BEACON

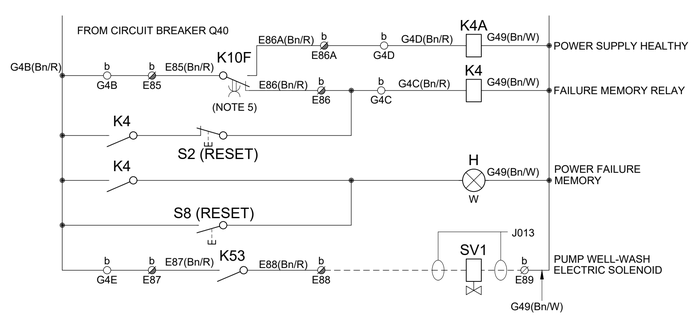

24 VAC CIRCUITS

No.	REVISION DETAILS	DWN	DATE
0	ISSUED FOR TENDER	RK	16.04.21

CONSULTANT DETAILS:
GHD
57 Graham Street Nowra NSW 2541
T 61 2 4424 4900 F 61 2 4424 4999
E noamail@ghd.com W www.ghd.com
CONSULTANT REFERENCE No.

Shoalhaven Water
A Group of Shoalhaven City Council

		DATE	COMPANY
DESIGNED:	CP	21.07.15	GHD
DRAWN:	CC	21.07.15	GHD
CHECKED:	DB	16.12.15	GHD
APPROVED:	CS	16.04.21	GHD

TITLE:
SHOALHAVEN WATER
ST ANNS PUMPING STATION UPGRADE
ELECTRICAL SERVICES
AUTO CONTROL DISTRIBUTION
SCHEMATIC DIAGRAM SHEET 1 OF 2

SIZE	SCALE	INDEX No.	DRAWING No.	SHEET	REV No.
A1	N.T.S.		23-1426641	211	0

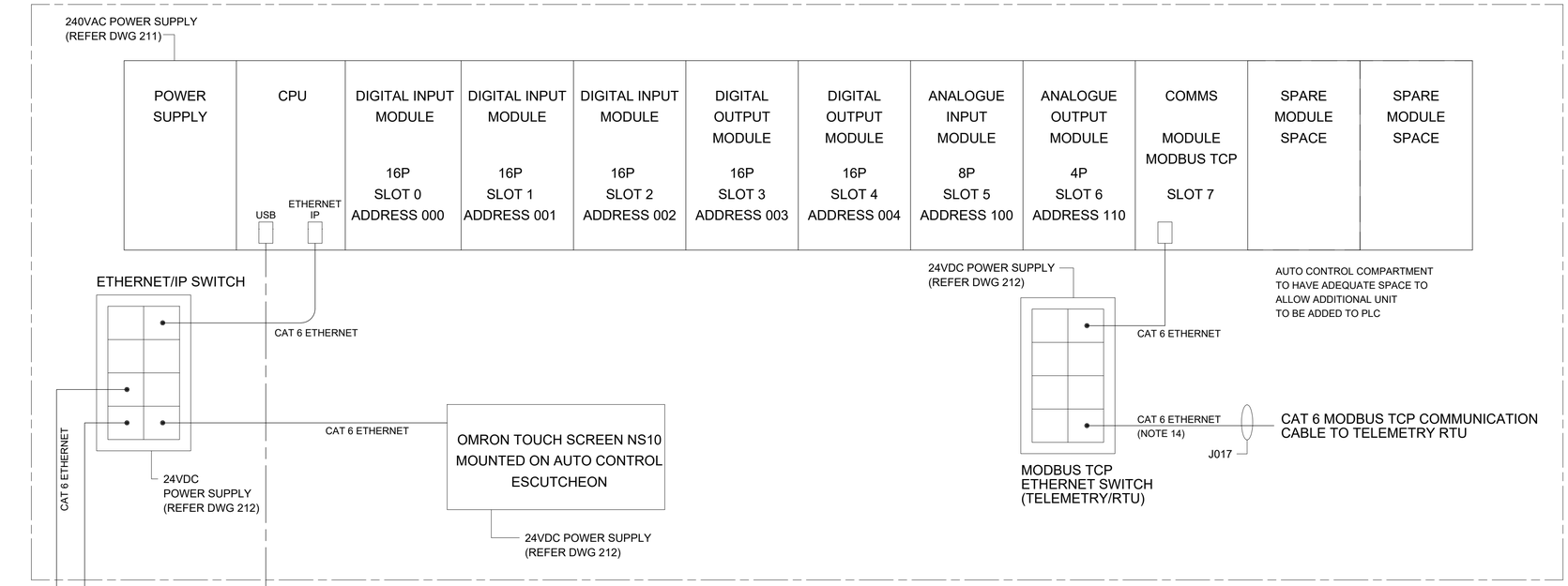

AUTO CONTROL PLC LAYOUT

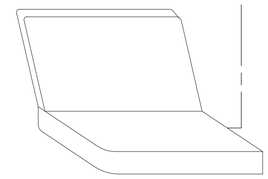

LAPTOP COMPUTER TO VIEW AND MODIFY PLC PROGRAM
LAPTOP COMPUTER NOT PART OF CONTRACT

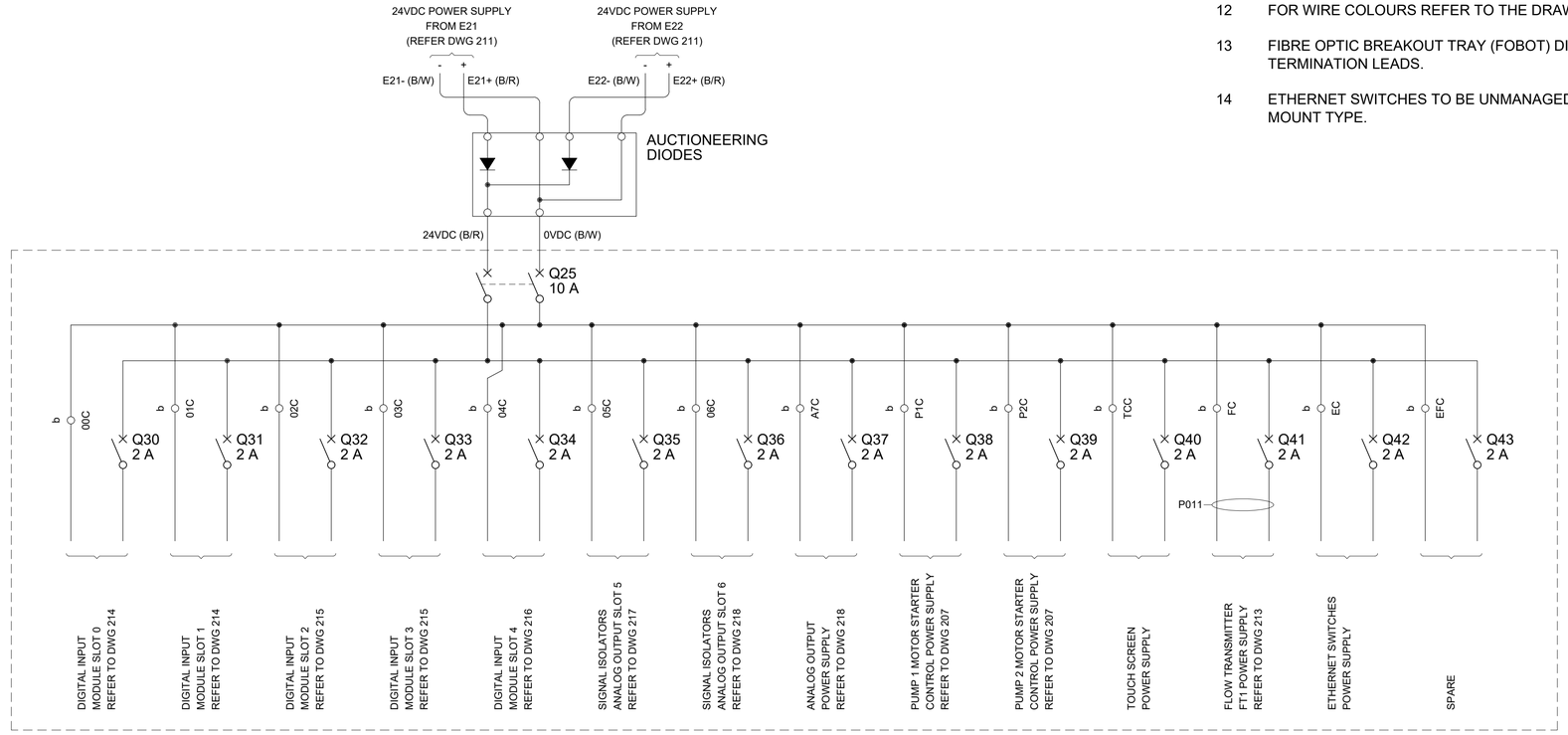

24 VOLT DC POWER SUPPLY DIAGRAM

NOTES

1. THE AUTO CONTROL SYSTEM HAS BEEN DESIGNED USING OMRON CJ2 EQUIPMENT. FOR EQUIPMENT DETAILS REFER TO THE SPECIFICATION.
2. THE DIGITAL OUTPUTS SHALL BE RELAY TYPE.
3. WHERE MORE THAN ONE POWER SUPPLY IS USED FOR THE INPUTS AND OUTPUTS THE INPUTS AND OUTPUTS SHALL BE SUPPLIED IN A LOGICAL MANNER.
4. THE TOUCH SCREEN, SIGNAL ISOLATORS AND ANALOGUE OUTPUT MODULE ARE SUPPLIED FROM THE I/O POWER SUPPLY. WHERE NOISE IS A PROBLEM SEPARATE POWER SUPPLIES SHALL BE USED.
5. THE CIRCUIT BREAKERS AND EQUIPMENT RATINGS INDICATED ARE INDICATIVE ONLY. THE ACTUAL RATINGS SHALL SUIT THE SYSTEM.
6. EQUIPMENT TERMINAL NUMBERING SHALL COMPLY WITH IEC STANDARD 947.
7. ALL WIRES SHALL BE FITTED WITH CABLE MARKERS, WHERE THE WIRE NUMBER IS NOT INDICATED THE WIRE NUMBER SHALL AGREE WITH THE TERMINAL NUMBER OF THE TERMINAL OF WHICH THE WIRE IS INSERTED.
8. THE PLC & TELEMETRY INTERFACE RELAYS SHALL BE INDUSTRIAL TYPE PLUG-IN COMPLETE WITH TWO CHANGE-OVER CONTACTS, RATED 2A, 240V AC15 MINIMUM WITH PRESS TO TEST AND FLAG INDICATION.
9. SUPPLY AND INSTALL ALL TERMINALS NECESSARY FOR TERMINATION OF ALL FIELD AND SCA INTERCONNECTING WIRING, INCLUDING SPARE CABLE CORES.
10. ALL EXTRA-LOW VOLTAGE TERMINALS, INCLUDING FUSE TERMINALS, SHALL BE BLUE IN COLOUR.
11. SUPPLY AND INSTALL CABLING BETWEEN THE SCA AND THE TELEMETRY RTU TERMINALS.
12. FOR WIRE COLOURS REFER TO THE DRAWINGS.
13. FIBRE OPTIC BREAKOUT TRAY (FOBOT) DIN-RAIL MOUNTED C/W 12-WAY TERMINATION LEADS.
14. ETHERNET SWITCHES TO BE UNMANAGED TYPE 24VDC DIN RAIL MOUNT TYPE.

No.	REVISION DETAILS	DWN	DATE
0	ISSUED FOR TENDER	RK	16.04.21

CONSULTANT DETAILS:
GHD
57 Graham Street Nowra NSW 2541
T 61 2 4424 4900 F 61 2 4424 4999
E noamail@ghd.com W www.ghd.com
CONSULTANT REFERENCE No.

Shoalhaven Water
A Group of Shoalhaven City Council

DESIGNED: CP	DATE: 21.07.15	COMPANY: GHD	
DRAWN: CC	DATE: 21.07.15	COMPANY: GHD	
CHECKED: DB	DATE: 16.12.15	COMPANY: GHD	
APPROVED: CS	DATE: 16.04.21	COMPANY: GHD	

TITLE:
SHOALHAVEN WATER
ST ANNS PUMPING STATION UPGRADE
ELECTRICAL SERVICES
AUTO CONTROL DISTRIBUTION
SCHEMATIC DIAGRAM SHEET 2 OF 2

SIZE	SCALE	INDEX No.	DRAWING No.	SHEET	REV No.
A1	N.T.S.		23-1426641	212	0

Plot Date: 15/04/21 - 19:28 Cad File: C:\CAD\temp\AcPublish_630924\23-1426641-212.dwg

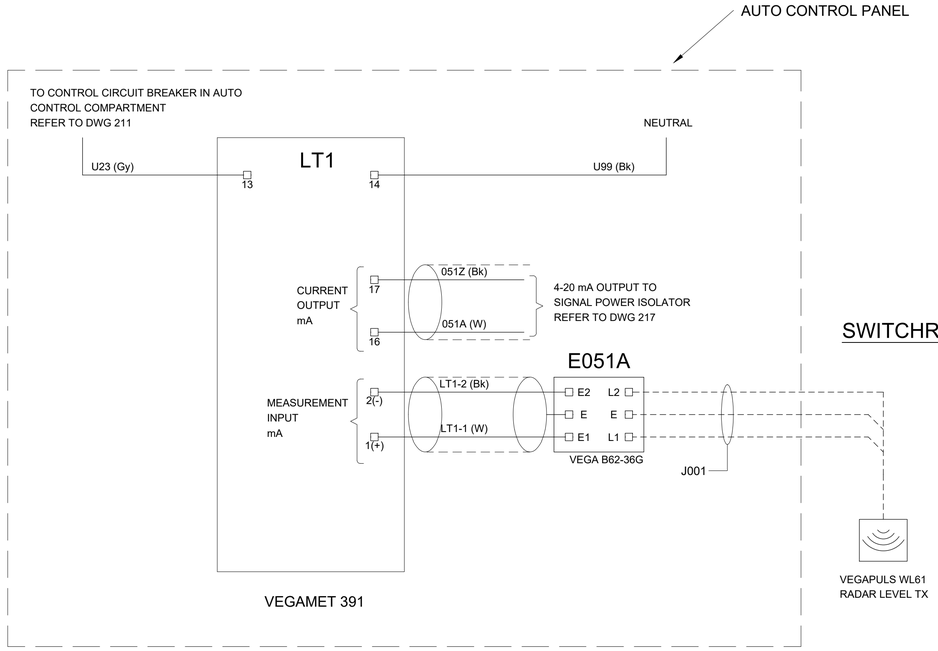

PUMPING STATION WET WELL LEVEL MONITORING SYSTEM LT1

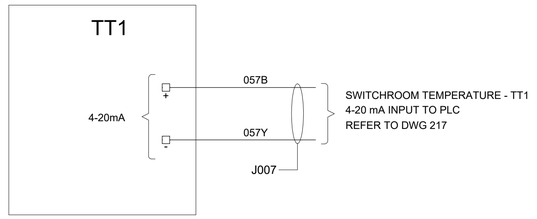

SWITCHROOM TEMPERATURE MONITORING TT1

NOTES

1. ALL EQUIPMENT ARE DRAWN FOR PROPRIETARY TYPE UNITS. AMEND THE DRAWINGS TO SUIT THE ACTUAL EQUIPMENT TENDERED.
2. ALL EQUIPMENT SHALL BE INSTALLED TO THE MANUFACTURER'S RECOMMENDATIONS.
3. ALL EXTRA LOW VOLTAGE TERMINALS SHALL BE BLUE IN COLOUR.
4. SUPPLY AND INSTALL ALL TERMINALS NECESSARY FOR TERMINATION OF ALL FIELD CABLES, INCLUDING SPARE CORES.
5. WIRE TERMINAL AND EQUIPMENT DESIGNATIONS INDICATED ON THE DRAWING ARE INDICATIVE ONLY AND MAY BE AMENDED TO SUIT THE EQUIPMENT AND SYSTEM LAYOUT.
6. TERMINATE THE EARTH TERMINAL OF THE SURGE PROTECTION DEVICE TO THE MAIN EARTH.
7. INSTRUMENTATION EARTH SCREENS TO BE EARTHED AT THE AUTO CONTROL END ONLY AND ISOLATED FROM EARTH AT THE INSTRUMENT.
8. FLOW ELEMENT /SENSOR MUST BE INSTALLED WITH AN EARTH RING ON EITHER SIDE OF THE FLANGE CONNECTIONS. REFER TO MANUFACTURER'S LITERATURE
9. CORES M1, M2, D1, D2, AND 3 SHALL BE CUT TO 70mm BEFORE TERMINATING TO FLOWMETER. REFER TO MANUFACTURER WIRING INSTALLATION GUIDELINES.
10. CORES S2, E2, E1 AND S1 SHALL BE CUT TO 60mm BEFORE TERMINATING TO FLOWMETER. REFER TO MANUFACTURER WIRING INSTALLATION GUIDELINES.

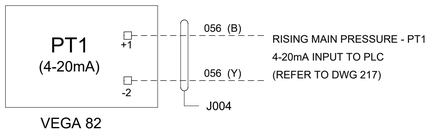

PUMPING STATION RISING MAIN PRESSURE MONITORING PT1

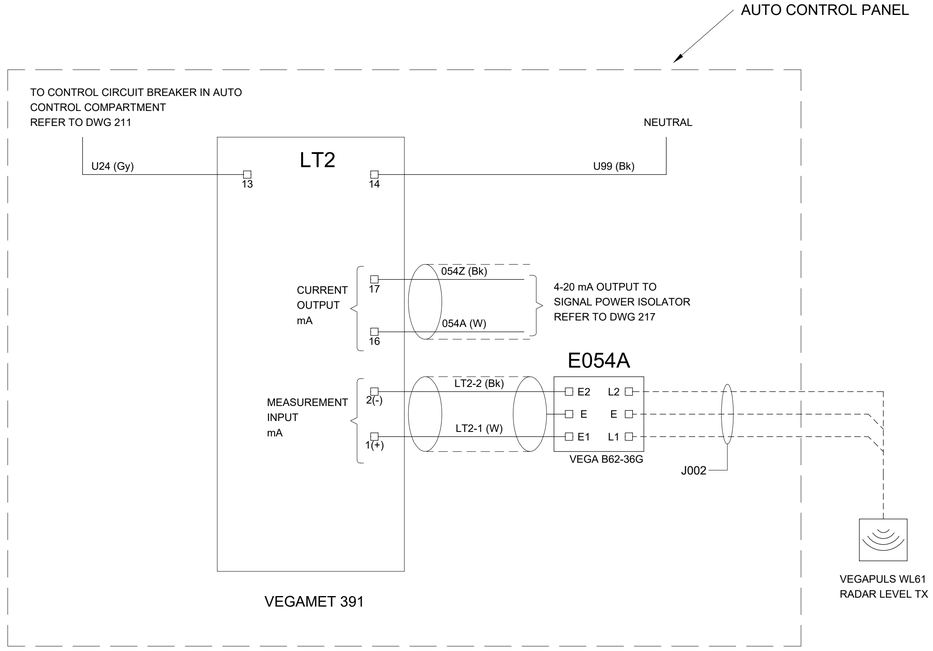

PUMPING STATIONS WET WELL LEVEL MONITORING SYSTEM LT2

PUMPING STATION FLOW MONITORING SYSTEM FT1

No.	REVISION DETAILS	DWN	DATE
0	ISSUED FOR TENDER	RK	16.04.21

CONSULTANT DETAILS:
GHD
57 Graham Street Nowra NSW 2541
T 61 2 4424 4900 F 61 2 4424 4999
E noamail@ghd.com W www.ghd.com
CONSULTANT REFERENCE No.

Shoalhaven Water
A Group of Shoalhaven City Council

DESIGNED: CP	DATE: 21.07.15	COMPANY: GHD	
DRAWN: CC	DATE: 21.07.15	COMPANY: GHD	
CHECKED: DB	DATE: 16.12.15	COMPANY: GHD	
APPROVED: CS	DATE: 16.04.21	COMPANY: GHD	

TITLE:
SHOALHAVEN WATER
ST ANNS PUMPING STATION UPGRADE
ELECTRICAL SERVICES
INSTRUMENTATION LOOPS

SIZE	SCALE	INDEX No.	DRAWING No.	SHEET	REV No.
A1	N.T.S.		23-1426641	213	0

NOTES

1 PLC I/O WIRING SHALL BE CARRIED OUT USING 0.75 mm² PVC FLEXIBLE CABLES. WIRE COLOURS ARE AS INDICATED.

DIGITAL INPUT MODULE SLOT 0

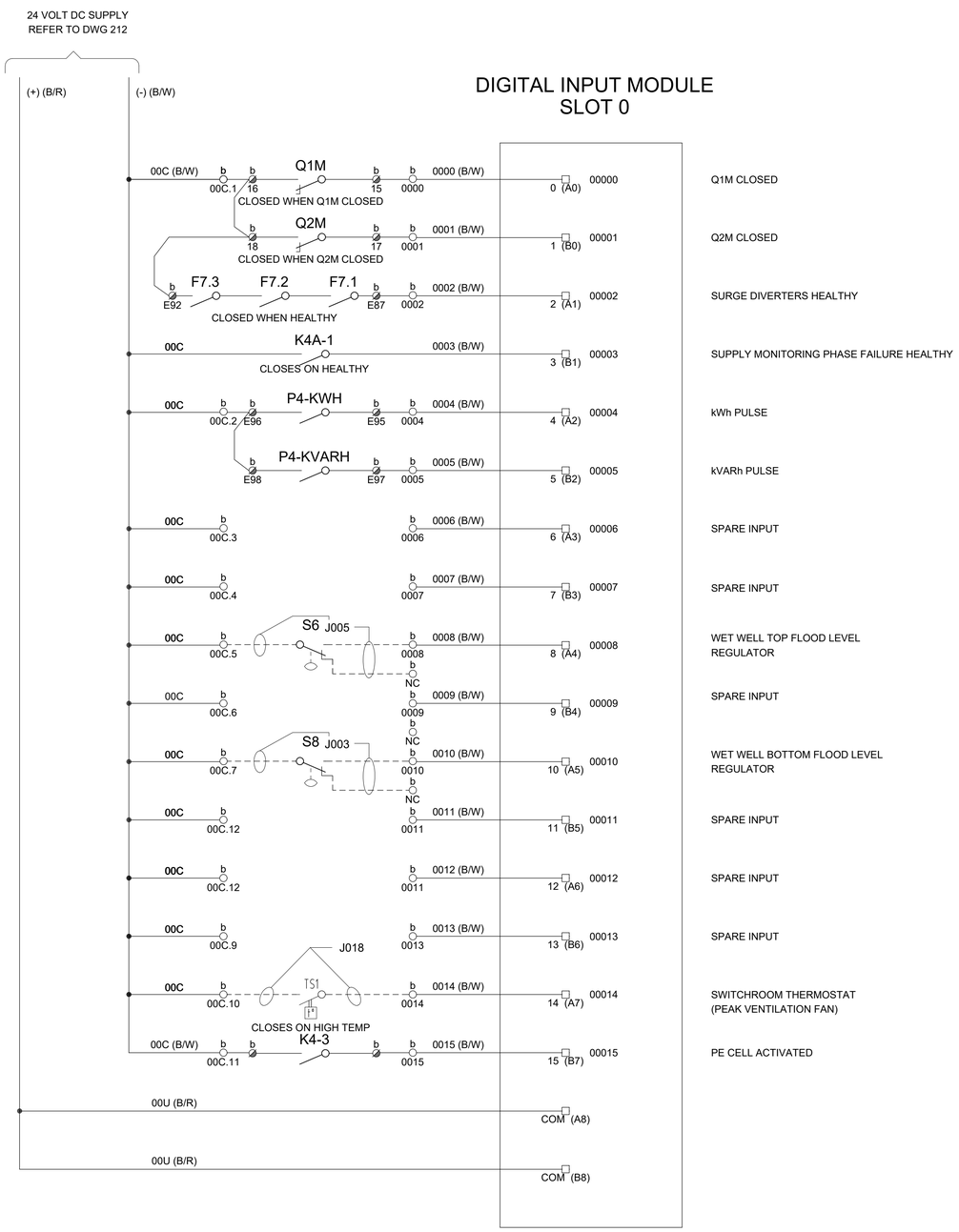

DIGITAL INPUT MODULE SLOT 1

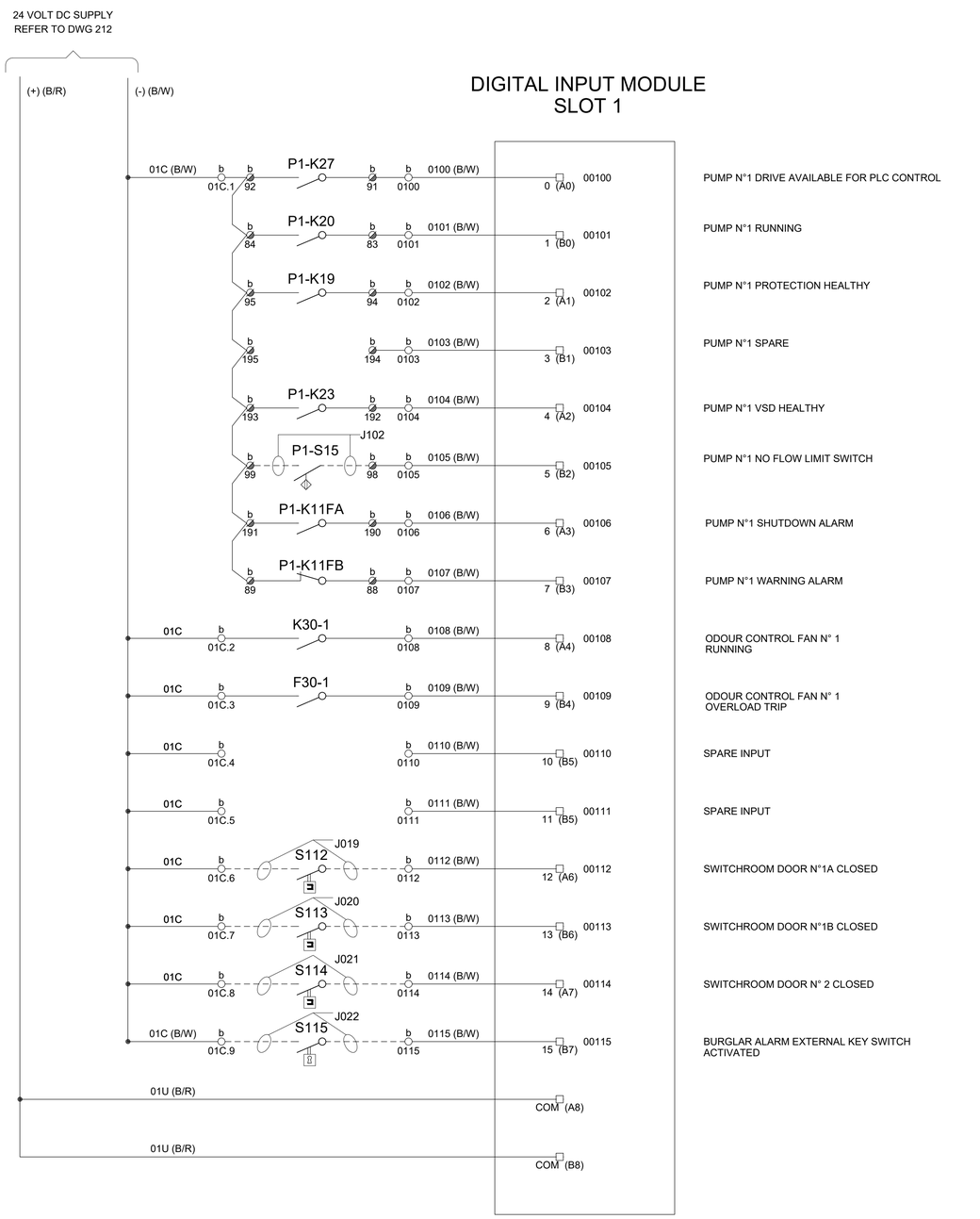

No.	REVISION DETAILS	DWN	DATE
0	ISSUED FOR TENDER	RK	16.04.21

CONSULTANT DETAILS:
GHD
57 Graham Street Nowra NSW 2541
T 61 2 4424 4900 F 61 2 4424 4999
E noamail@ghd.com W www.ghd.com

CONSULTANT REFERENCE No.

Shoalhaven Water
A Group of Shoalhaven City Council

DESIGNED: CP	DATE: 21.07.15	COMPANY: GHD	
DRAWN: CC	DATE: 21.07.15	COMPANY: GHD	
CHECKED: DB	DATE: 16.12.15	COMPANY: GHD	
APPROVED: CS	DATE: 16.04.21	COMPANY: GHD	

TITLE:
SHOALHAVEN WATER
ST ANNS PUMPING STATION UPGRADE
ELECTRICAL SERVICES
AUTO CONTROL I/O MODULE
SCHEMATIC DIAGRAM SHEET 1 OF 5

SIZE	SCALE	INDEX No.	DRAWING No.	SHEET	REV No.
A1	N.T.S.		23-1426641	214	0

Plot Date: 15/04/21 - 19:29 Cad File: C:\CAD\temp\AcPublish_630924\23-1426641-214.dwg

NOTES

1 PLC I/O WIRING SHALL BE CARRIED OUT USING 0.75 mm² PVC FLEXIBLE CABLES. WIRE COLOURS ARE AS INDICATED.

DIGITAL INPUT MODULE SLOT 2

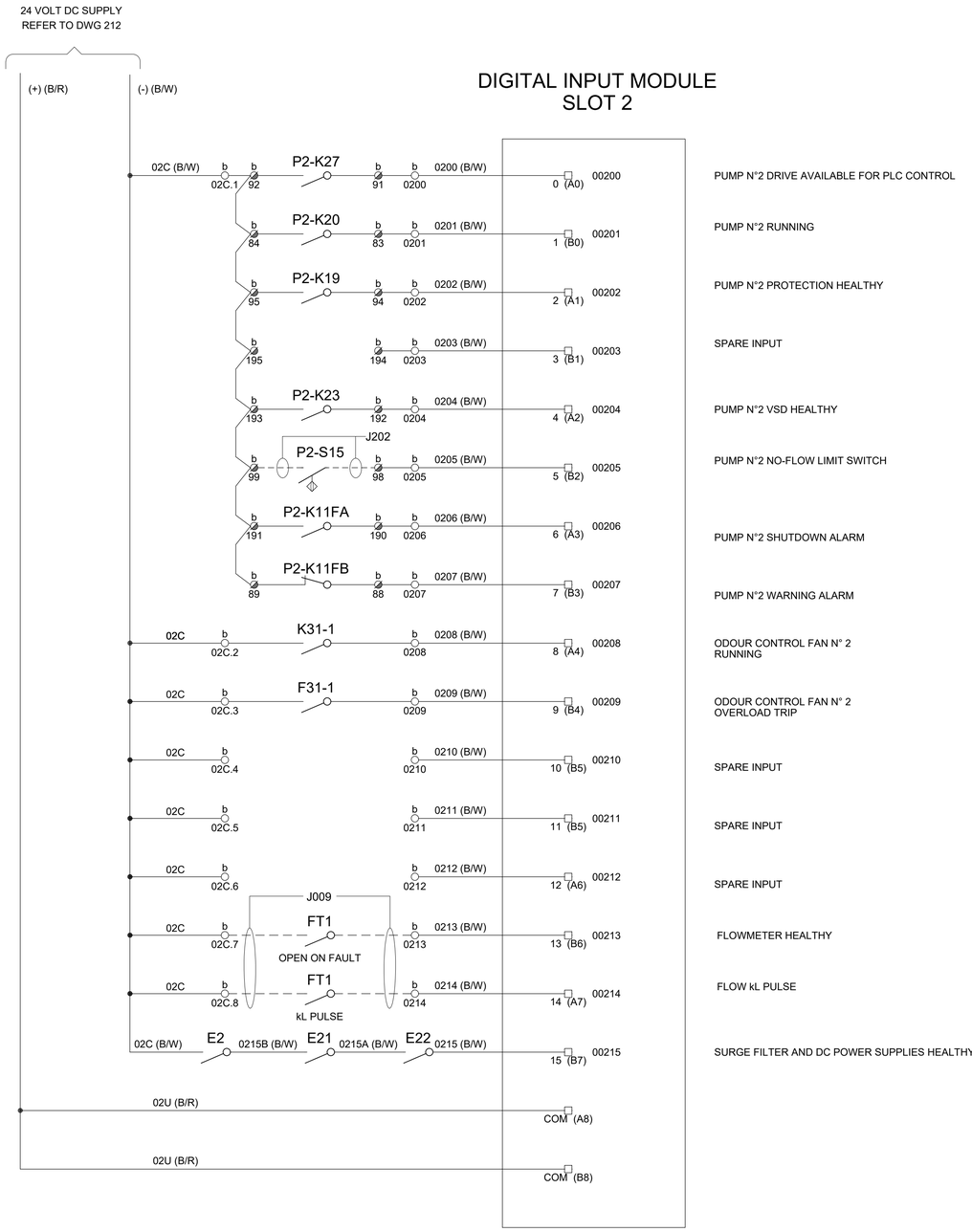

DIGITAL OUTPUT MODULE SLOT 3

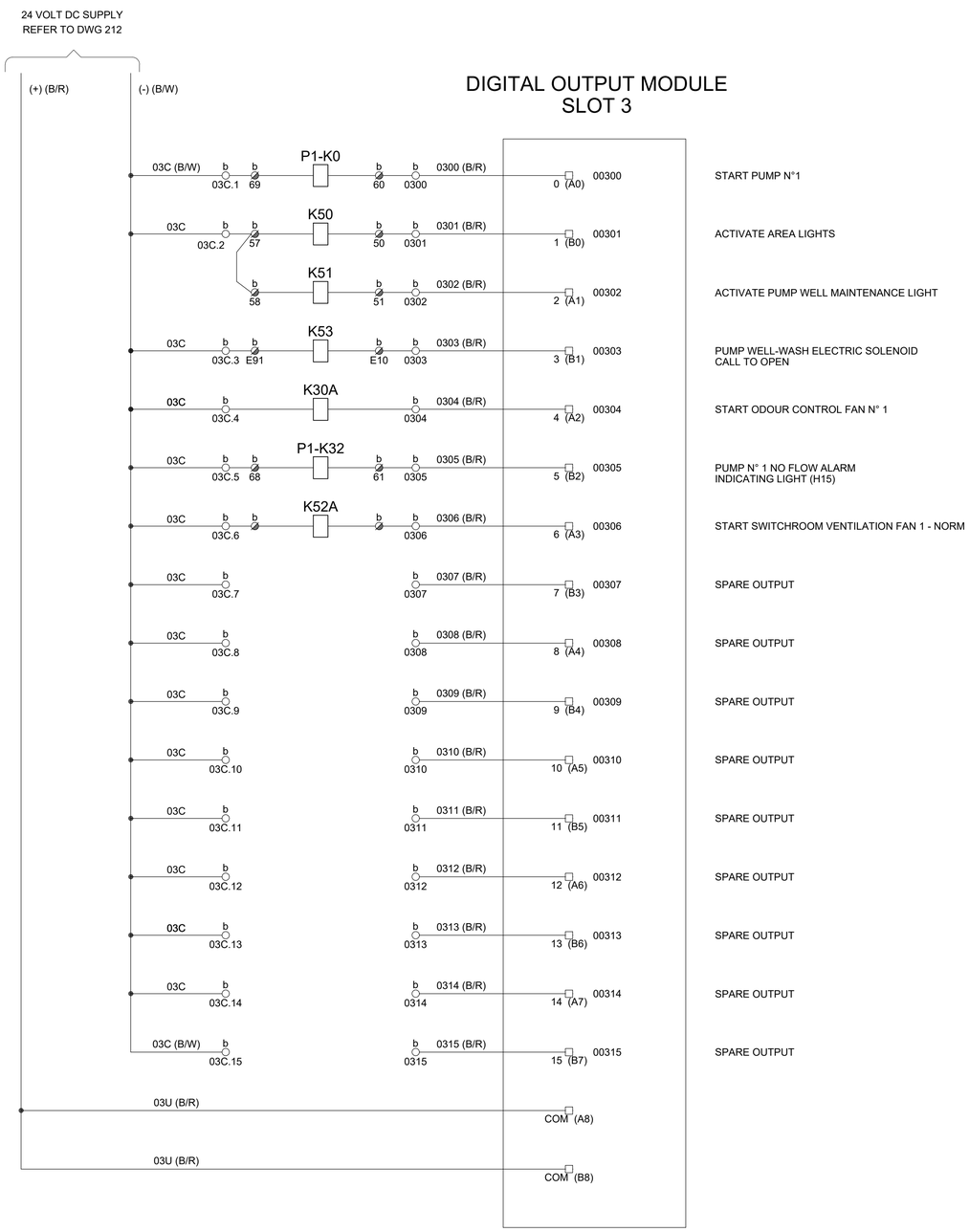

No.	REVISION DETAILS	DWN	DATE
0	ISSUED FOR TENDER	RK	16.04.21

CONSULTANT DETAILS:
GHD
57 Graham Street Nowra NSW 2541
T 61 2 4424 4900 F 61 2 4424 4999
E noamail@ghd.com W www.ghd.com

CONSULTANT REFERENCE No.

Shoalhaven Water
A Group of Shoalhaven City Council

DESIGNED: CP	DATE: 21.07.15	COMPANY: GHD	
DRAWN: CC	DATE: 21.07.15	COMPANY: GHD	
CHECKED: DB	DATE: 16.12.15	COMPANY: GHD	
APPROVED: CS	DATE: 16.04.21	COMPANY: GHD	

TITLE:
SHOALHAVEN WATER
ST ANNS PUMPING STATION UPGRADE
ELECTRICAL SERVICES
AUTO CONTROL I/O MODULE
SCHEMATIC DIAGRAM SHEET 2 OF 5

SIZE	SCALE	INDEX No.	DRAWING No.	SHEET	REV No.
A1	N.T.S.		23-1426641	215	0

Plot Date: 15/04/21 - 19:29 Cad File: C:\CAD\temp\AcPublish_630924\23-1426641-215.dwg

NOTES

1 PLC I/O WIRING SHALL BE CARRIED OUT USING 0.75 mm² PVC FLEXIBLE CABLES. WIRE COLOURS ARE AS INDICATED.

24 VOLT DC SUPPLY
REFER TO DWG 212

(+) (B/R)

(-) (B/W)

DIGITAL OUTPUT MODULE SLOT 4

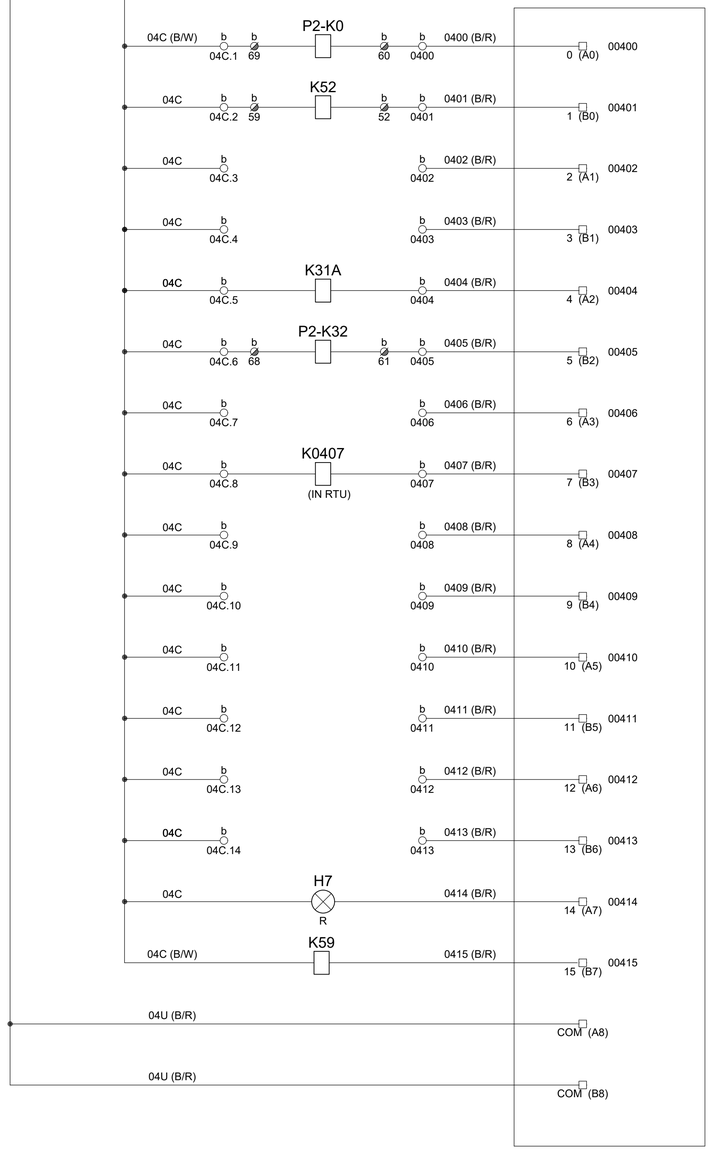

No.	REVISION DETAILS	DWN	DATE
0	ISSUED FOR TENDER	RK	16.04.21

CONSULTANT DETAILS:
GHD
57 Graham Street Nowra NSW 2541
T 61 2 4424 4900 F 61 2 4424 4999
E noamail@ghd.com W www.ghd.com

CONSULTANT REFERENCE No.

Shoalhaven Water
A Group of Shoalhaven City Council

DESIGNED: CP	DATE: 21.07.15	COMPANY: GHD	
DRAWN: CC	DATE: 21.07.15	COMPANY: GHD	
CHECKED: DB	DATE: 16.12.15	COMPANY: GHD	
APPROVED: CS	DATE: 16.04.21	COMPANY: GHD	

TITLE:
SHOALHAVEN WATER
ST ANNS PUMPING STATION UPGRADE
ELECTRICAL SERVICES
AUTO CONTROL I/O MODULE
SCHEMATIC DIAGRAM SHEET 3 OF 5

SIZE	SCALE	INDEX No.	DRAWING No.	SHEET	REV No.
A1	N.T.S.		23-1426641	216	0

Plot Date: 15/04/21 - 19:29 Cad File: C:\CAD\temp\AcPublish_630924\23-1426641-216.dwg

ANALOGUE INPUT MODULE
SLOT 5

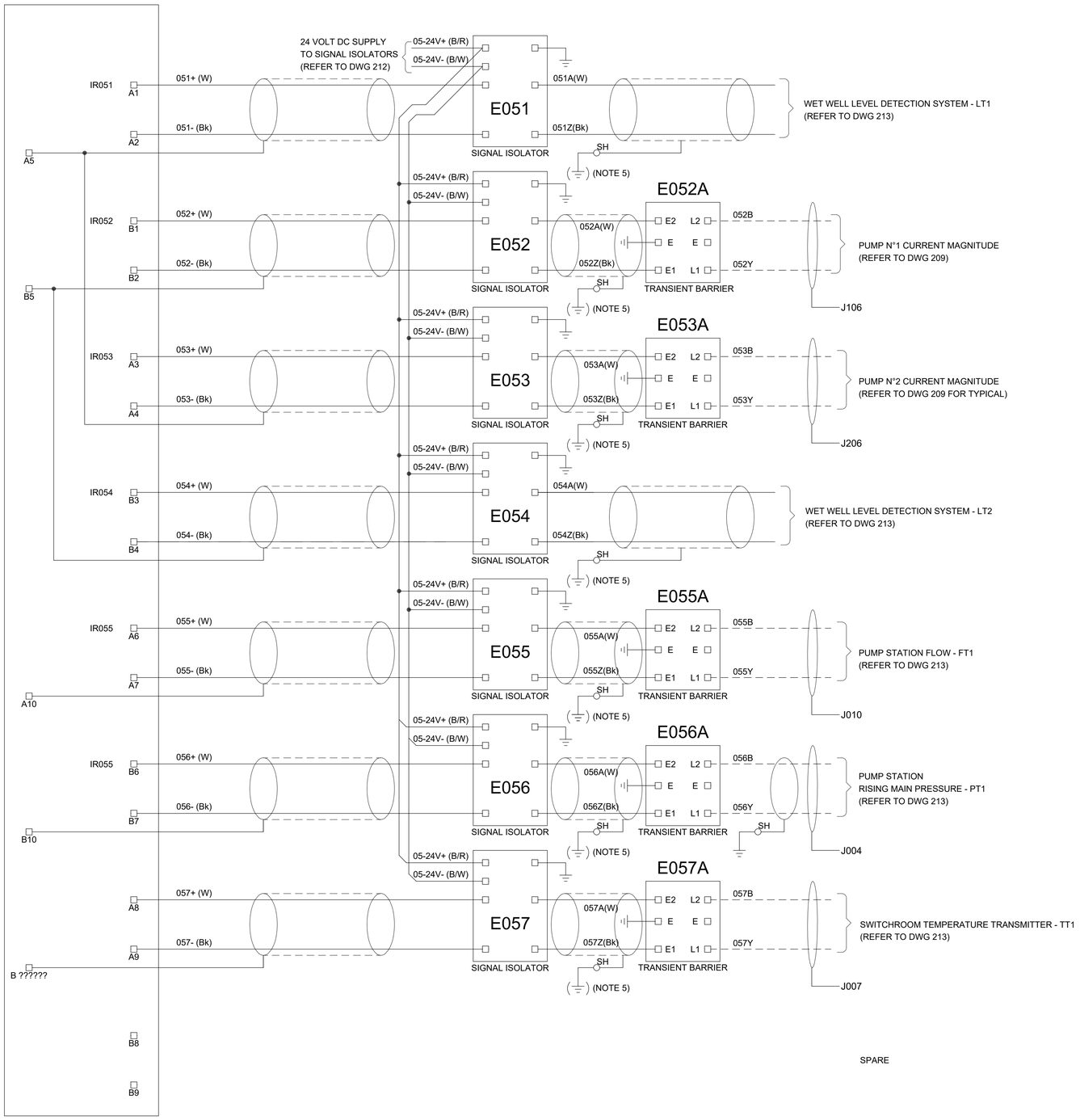

NOTES

1 THE ISOLATORS SHALL PROVIDE GALVANIC ISOLATION TO THE ANALOGUE INPUTS TO THE PLC AND HAVE A INPUT/OUTPUT ISOLATION OF 2 kV RMS CONTINUOUS OR BETTER. THE ISOLATORS SHALL HAVE A LED TO PROVIDE INDICATION OF THE MODULE FUNCTION, SIGNAL PRESENCE AND LOOP CONDITION FOR CURRENT OUTPUT.

2 THE SPARE INPUTS SHALL WIRED TO TERMINALS. TERMINAL NUMBERS TO MATCH WIRE NUMBERS.

3 THE AUTO CONTROL COMPARTMENT SHALL HAVE PROVISION FOR THE FUTURE INSTALLATION OF SIGNAL ISOLATORS AND TRANSIENT BARRIERS FOR EACH SPARE ANALOGUE INPUT.

4 TERMINATE THE EARTH TERMINAL OF THE SURGE PROTECTION DEVICE TO THE MAIN EARTH.

5 (⏚) SIGNIFIES INSTRUMENT EARTH AND MUST BE ELECTRICALLY ISOLATED FROM GENERAL (DIRTY) EARTH. INSTRUMENT EARTH TO BE TIED BACK TO 24VDC POWER NEGATIVE.

No.	REVISION DETAILS	DWN	DATE
0	ISSUED FOR TENDER	RK	16.04.21

CONSULTANT DETAILS:
GHD
57 Graham Street Nowra NSW 2541
T 61 2 4424 4900 F 61 2 4424 4999
E noamail@ghd.com W www.ghd.com
CONSULTANT REFERENCE No.

Shoalhaven Water
A Group of Shoalhaven City Council

DESIGNED: CP	DATE: 21.07.15	COMPANY: GHD	
DRAWN: CC	DATE: 21.07.15	COMPANY: GHD	
CHECKED: DB	DATE: 16.12.15	COMPANY: GHD	
APPROVED: CS	DATE: 16.04.21	COMPANY: GHD	

TITLE:
SHOALHAVEN WATER
ST ANNS PUMPING STATION UPGRADE
ELECTRICAL SERVICES
AUTO CONTROL I/O MODULE
SCHEMATIC DIAGRAM SHEET 4 OF 5

SIZE	SCALE	INDEX No.	DRAWING No.	SHEET	REV No.
A1	N.T.S.		23-1426641	217	0

Plot Date: 15/04/21 - 19:29 Cad File: C:\CAD\temp\AcPublish_630924\23-1426641-217.dwg

ANALOGUE OUTPUT MODULE
SLOT 6

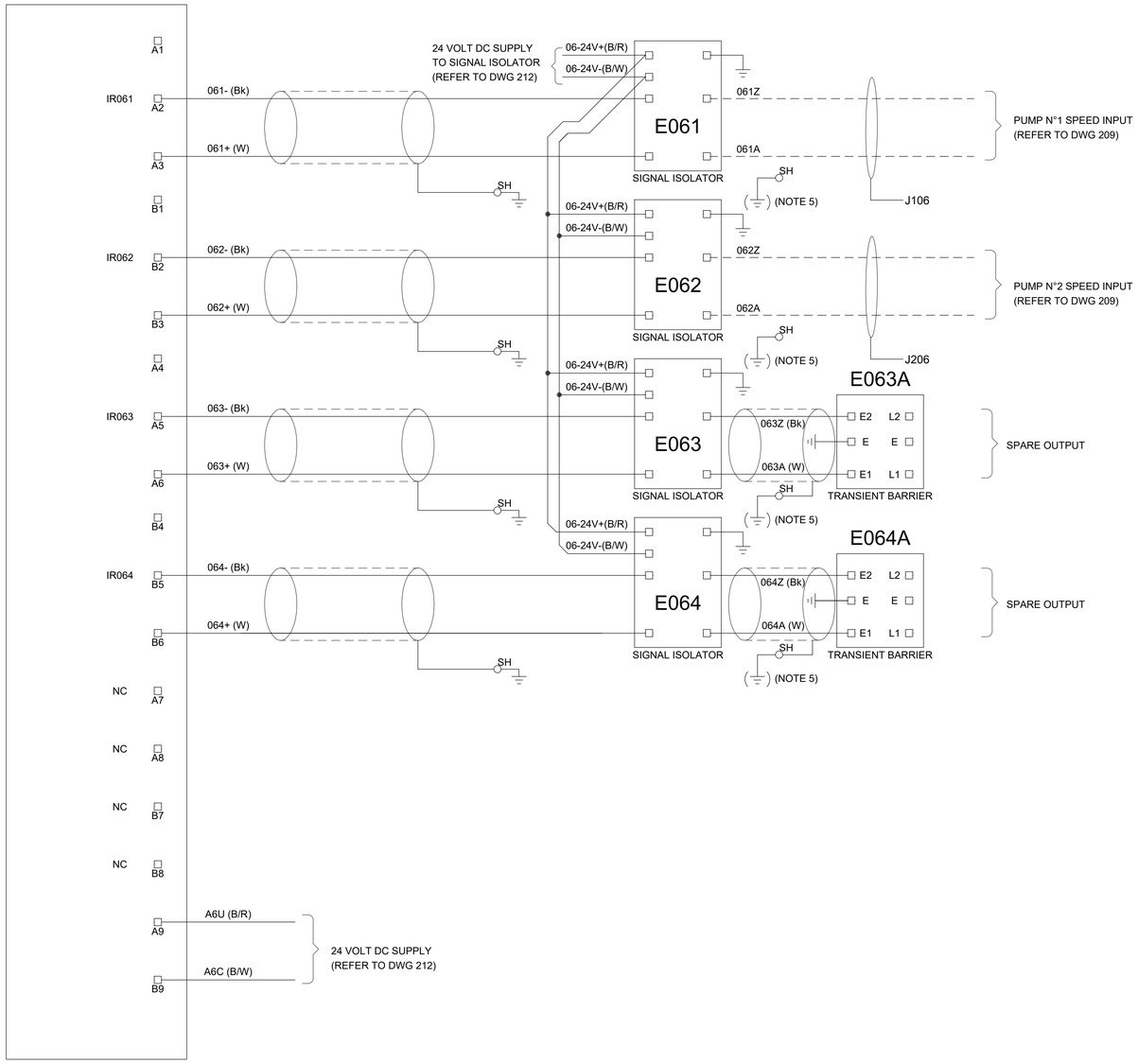

NOTES

1 THE ISOLATORS SHALL PROVIDE GALVANIC ISOLATION TO THE ANALOGUE OUTPUTS TO THE PLC AND HAVE A INPUT/OUTPUT ISOLATION OF 2 kV RMS CONTINUOUS OR BETTER. THE ISOLATORS SHALL HAVE A LED TO PROVIDE INDICATION OF THE MODULE FUNCTION, SIGNAL PRESENCE AND LOOP CONDITION FOR CURRENT OUTPUT.

2 THE SPARE OUTPUTS SHALL WIRED TO TERMINALS. TERMINAL NUMBERS TO MATCH WIRE NUMBERS.

3 THE AUTO CONTROL COMPARTMENT SHALL HAVE PROVISION FOR THE FUTURE INSTALLATION OF SIGNAL ISOLATORS AND TRANSIENT BARRIERS FOR EACH SPARE ANALOGUE OUTPUT.

4 TERMINATE THE EARTH TERMINAL OF THE SURGE PROTECTION DEVICE TO THE MAIN EARTH.

5 (⏚) SIGNIFIES INSTRUMENT EARTH AND MUST BE ELECTRICALLY ISOLATED FROM GENERAL (DIRTY) EARTH. INSTRUMENT EARTH TO BE TIED BACK TO 24VDC POWER NEGATIVE.

No.	REVISION DETAILS	DWN	DATE
0	ISSUED FOR TENDER	RK	16.04.21

CONSULTANT DETAILS:
GHD
57 Graham Street Nowra NSW 2541
T 61 2 4424 4900 F 61 2 4424 4999
E noamail@ghd.com W www.ghd.com

CONSULTANT REFERENCE No.

Shoalhaven Water
A Group of Shoalhaven City Council

DESIGNED: CP	DATE: 21.07.15	COMPANY: GHD	
DRAWN: CC	DATE: 21.07.15	COMPANY: GHD	
CHECKED: DB	DATE: 16.12.15	COMPANY: GHD	
APPROVED: CS	DATE: 16.04.21	COMPANY: GHD	

TITLE:
SHOALHAVEN WATER
ST ANNS PUMPING STATION UPGRADE
ELECTRICAL SERVICES
AUTO CONTROL I/O MODULE
SCHEMATIC DIAGRAM SHEET 5 OF 5

SIZE	SCALE	INDEX No.	DRAWING No.	SHEET	REV No.
A1	N.T.S.		23-1426641	218	0

Plot Date: 15/04/21 - 19:30 Cad File: C:\CAD\temp\AcPublish_630924\23-1426641-218.dwg

NOTES

1. THE DIMENSIONS AND RATING SHOWN ARE INDICATIVE ONLY. THE DIMENSIONS AND RATING TO SUIT THE INDIVIDUAL STATIONS.
2. ENCLOSURE TO BE MANUFACTURED OUT OF 316 STAINLESS STEEL AND HAVE A DEGREE OF PROTECTION OF IP66.
3. PADBOLTS TO BE SUITABLE FOR COUNCIL'S PADLOCKS.
4. APERTURE CUT-OUT DIMENSIONS INDICATIVE. CONTRACTOR TO SIZE ADEQUATELY. APERTURE PERIMETER SHALL HAVE PROTECTIVE STRIP PLACED ALONG SHARP EDGES OF GEAR PLATE TO PROTECT CABLES FROM DAMAGE.
5. ALLOW ADEQUATE PROTRUDING CONDUIT LENGTH TO PASS THROUGH AND INTO ENCLOSURE. CIRCUMFERENCE SHALL BE SEALED TO PROTECT AGAINST MOISTURE/DUST INGRESS INTO ENCLOSURE.
6. TERMINAL SHALL BE COVERED BY FULL PLASTIC (CLEAR) SHROUD/COVER.

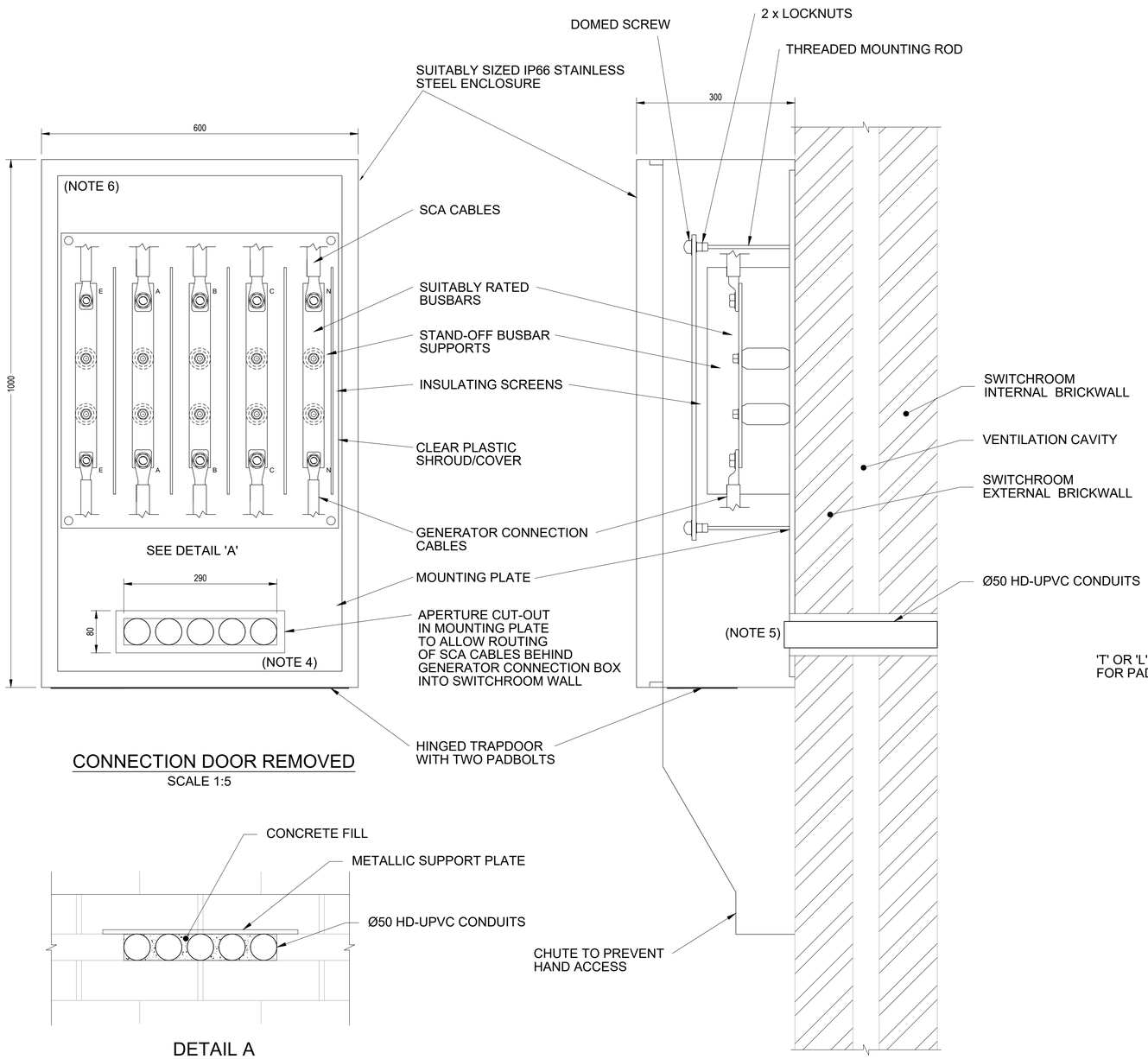

CONNECTION DOOR REMOVED
SCALE 1:5

DETAIL A
SWITCHROOM WALL CONDUIT PENETRATION
SCALE 1:5

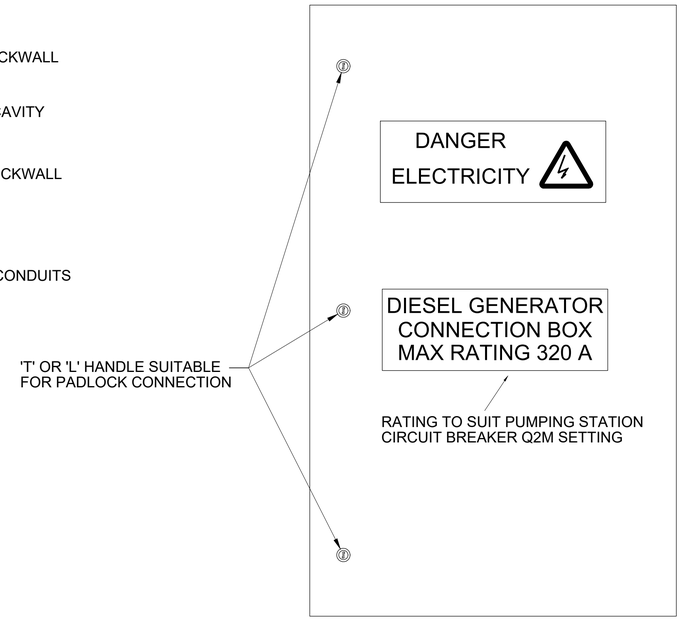

CONNECTION BOX WITH DOOR IN PLACE
N.T.S

0 0.05 0.1 0.15 0.2 0.25m
SCALE 1:5 AT ORIGINAL SIZE

No.	REVISION DETAILS	DWN	DATE
0	ISSUED FOR TENDER	RK	16.04.21

CONSULTANT DETAILS:
GHD
57 Graham Street Nowra NSW 2541
T 61 2 4424 4900 F 61 2 4424 4999
E noamail@ghd.com W www.ghd.com
CONSULTANT REFERENCE No.

Shoalhaven Water
A Group of Shoalhaven City Council

DESIGNED: CP	DATE: 21.07.15	COMPANY: GHD	
DRAWN: CC	DATE: 21.07.15	COMPANY: GHD	
CHECKED: DB	DATE: 16.12.15	COMPANY: GHD	
APPROVED: CS	DATE: 16.04.21	COMPANY: GHD	

TITLE:
SHOALHAVEN WATER
ST ANNS PUMPING STATION UPGRADE
ELECTRICAL SERVICES
TYPICAL GENERATOR CONNECTION BOX DETAILS

SIZE	SCALE	INDEX No.	DRAWING No.	SHEET	REV No.
A1	AS SHOWN		23-1426641	219	0

Plot Date: 15/04/21 - 19:30 Cad File: C:\CAD\temp\AcPublish_630924\23-1426641-219.dwg

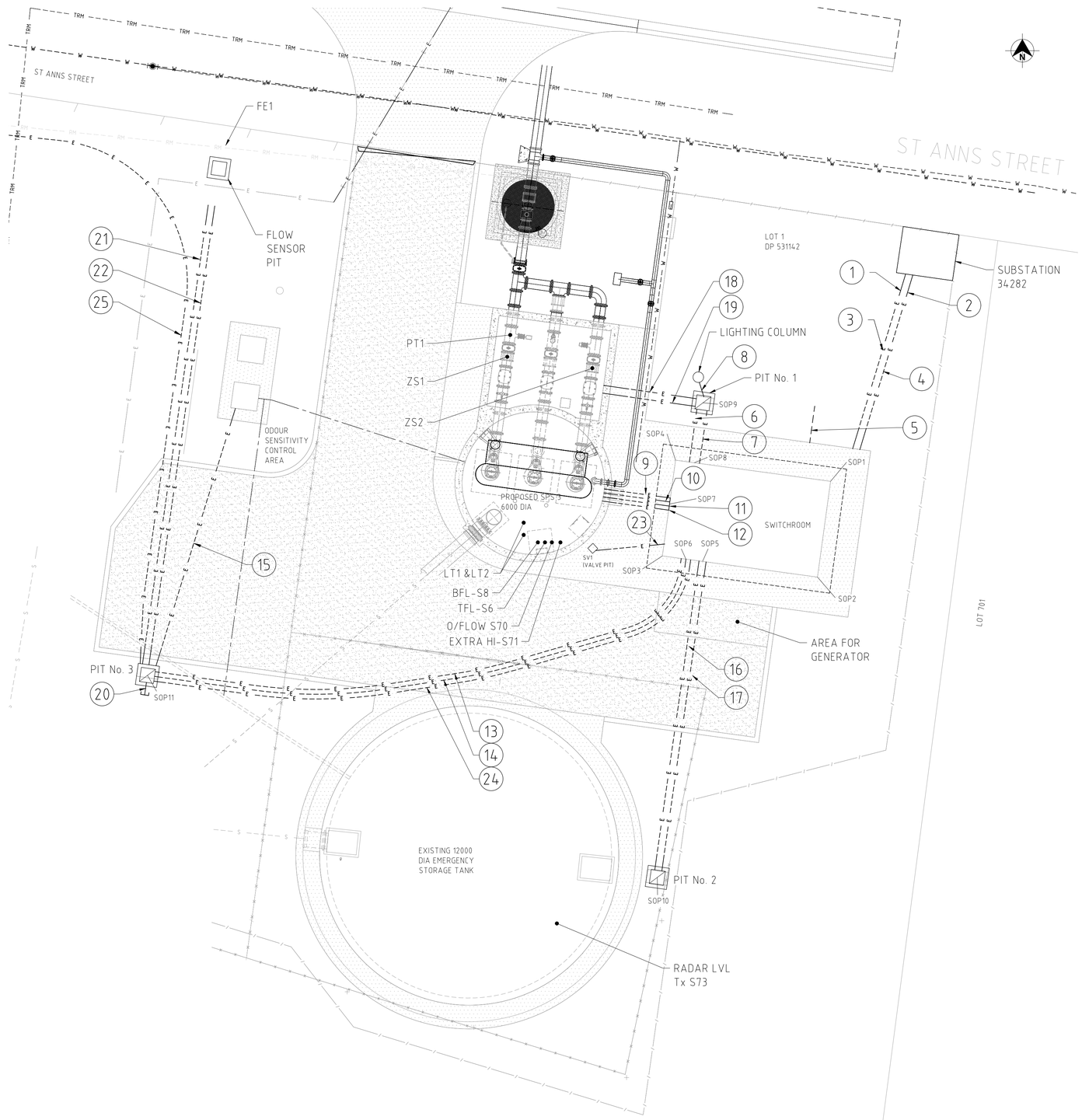

SITE LAYOUT
SCALE 1:100

CONDUIT LEGEND

ITEM	DESCRIPTION	SIZE/TYPE
1	CONSUMER MAINS	100mm HD-UPVC
2	CONSUMER MAINS (SPARE)	100mm HD-UPVC
3	CONSUMER MAINS	100mm HD-UPVC
4	NOT USED	100mm HD-UPVC
5	NOT USED	80mm HD-UPVC
6	SCA-PIT NO.1 (I&C)	80mm HD-UPVC
7	SCA-PIT NO.1 (PWR)	80mm HD-UPVC
8	LIGHTING (PWR)	80mm HD-UPVC
9	PUMP 1 (PWR)	100mm HD-UPVC
10	PUMP 1 (PWR)	100mm HD-UPVC
11	PUMP 1, 2 & 3 (FUTURE) (CTRL)	100mm HD-UPVC
11A	PUMP 2 (PWR)	100mm HD-UPVC
11B	PUMP 2 (PWR)	100mm HD-UPVC
11C	PUMP 3 (PWR) (FUTURE)	100mm HD-UPVC
11D	PUMP 3 (PWR) (FUTURE)	100mm HD-UPVC
12	WET WELL (I&C)	100mm HD-UPVC
13	SCA-PIT NO.3 (PWR)	80mm HD-UPVC
14	SCA-PIT NO.3 (I&C)	80mm HD-UPVC
15	ODOUR CTRL (PWR)	80mm HD-UPVC
16	SCA-PIT NO.2 (I&C)	80mm HD-UPVC
17	SCA-PIT NO.2 (SPARE)	80mm HD-UPVC
18	PIT NO.1-VALVE PIT (SPARE)	80mm HD-UPVC
19	PIT NO.1-VALVE PIT (I&C)	80mm HD-UPVC
20	PIT NO.3-H/STAND	80mm HD-UPVC
21	PIT NO.3-FLOW PIT (I&C)	80mm HD-UPVC
22	PIT NO.3-FLOW PIT (SPARE)	80mm HD-UPVC
23	SCA-SV PIT	50mm HD-UPVC
24	SCA-PIT NO.3 (FO)	100mm HD-UPVC
25	PIT NO.3-FLOW PIT (FO)	100mm HD-UPVC

SETOUT POINTS

POINT	EASTING	NORTHING
SP01	280377102.958	6137173006.261
SP02	280376551.060	6137168973.854
SP03	280370021.929	6137169867.469
SP04	280370573.827	6137173899.876
SP05	280371713.015	6137169635.057
SP06	280371012.692	6137169731.867
SP07	280370320.692	6137172050.358
SP08	280371369.635	6137173790.957
SP09	280371731.511	6137176315.697
SP10	280369807.243	6137156329.210
SP11	280348333.006	6137164834.186

NOTES

1. ODOUR CONTROL REQUIREMENTS TO BE DETERMINED DURING DETAILED DESIGN.
2. EXISTING SPS FACILITY TO BE DEMOLISHED IN ACCORDANCE WITH THE SPECIFICATION + DRAWING
3. REFER TO DRAWING 23-1426641-201 FOR GENERAL NOTES.
4. REFER TO THE CIVIL DRAWINGS FOR FULL DETAILS ON THE SITE.
5. WHERE THERE IS A CONFLICT BETWEEN DIMENSIONS OR LAYOUTS BETWEEN ANY ELECTRICAL SERVICE DRAWING IN THIS SET AND ANY CIVIL DRAWING, THE DIMENSIONS AND/OR LAYOUT OF THE CIVIL DRAWING SHALL BE DEEMED TO BE ACCURATE.
6. ALL LEVEL 2 ACCREDITATION WORK NECESSARY FOR THE CONNECTION TO ENDEAVOR ENERGY NETWORK, INCLUDING UNDERGROUND RETICULATION AND METERING, SHALL BE CARRIED OUT AS PART OF THE WORK.
7. CARRY OUT ALL NECESSARY CO-ORDINATION WITH THE LEVEL 1 SERVICE PROVIDER. CARRY OUT WORK ON INTEGRAL ENERGY DISTRIBUTION SYSTEM.
8. THE LOCATION OF EQUIPMENT IS TYPICAL ONLY. FINAL LOCATION TO BE DETERMINED ON SITE.
9. SUPPLY AND INSTALL ALL NECESSARY BRACKETS ETC. TO ALLOW INSTALLATION OF THE ASSOCIATED ELECTRICAL SERVICES.
10. THE LEVEL EQUIPMENT SUPPORT BRACKETS SHALL BE LOCATED IN THE POSITION INDICATED ON THE DRAWING. AN ALTERNATIVE POSITION MAY BE CHOSEN IF THE LEVEL EQUIPMENT WOULD FOUL ANY OTHER EQUIPMENT OR WELL STRUCTURE.
11. ALL LEVEL SENSORS SHALL BE INSTALLED WITH ENOUGH CABLE SO AS TO BE ABLE TO REACH THE BOTTOM OF THE WELL. EACH LEVEL SENSOR SHALL BE INSTALLED SUCH THAT IT OPERATES AT ITS RESPECTIVE WATER LEVEL. ANY SPARE CABLE LENGTH LEFT WITHIN THE WELL SHALL BE EITHER LOOPED ON OR SUSPENDED IN A COIL OF ITS SUPPORT BRACKET IN ORDER TO ALLOW ADJUSTMENT IN THE FUTURE.
12. THE LEVEL SENSORS SHALL BE INSTALLED IN STILLING TUBES. REFER TO THE DRAWINGS FOR TYPICAL INSTALLATION DETAILS.
13. FOR THE LEVEL SENSORS AND REGULATORS OPERATING LEVELS REFER TO THE DRAWINGS.
14. ALL CONDUITS SHALL BE SEALED WHERE THEY EMERGE OUTSIDE THE SWITCHROOM. EXPANDING FOAM SHALL BE USED FOR SEALING.
15. SUPPLY AND INSTALL THE CABLE HOOKS, REFER TO THE DRAWINGS FOR DETAILS. INSTALL THE CABLE STOCKING SUPPLIED BY THE PUMP SUPPLIER.
16. PUMP CABLE HOOKS AND CABLE STOCKINGS TO BE INSTALLED CLEAR OF THE PUMP GUIDE RAILS TO PREVENT TANGLING OF AND DAMAGE TO THE PUMP CABLES DURING PUMP REMOVAL.
17. SUPPLY AND INSTALL PUMP IDENTIFICATION NUMBERS. THE PUMP NUMBERS SHALL BE FIXED ADJACENT TO THE GUIDE RAILS OF THE APPROPRIATE PUMP. THE NUMBERS SHALL BE 100 HIGH, MANUFACTURED OUT OF STAINLESS STEEL OR SUNLIGHT RESISTANT PLASTIC.
18. CONDUITS INSTALLED INSIDE THE PUMP WELL SHALL BE SECURED USING STAINLESS STEEL SADDLES AND FIXINGS.
19. ALL BOLTS, NUTS WASHERS ETC., USED SHALL BE 316 GRADE STAINLESS STEEL. ALL THREADS SHALL BE LUBRICATED IN ORDER TO PREVENT GALLING.
20. THE CONDUIT RETICULATION AND ALL ELECTRICAL EQUIPMENT IN THE VALVE PIT SHALL HAVE A DEGREE OF PROTECTION OF IP67. THE CONDUIT TO THE VALVE PIT SHALL BE SEALED WITH EXPANDING FOAM.
21. FLEXIBLE CONDUITS SHALL BE FLEXICON LPC OR RHINOFLEX CONDUITS. THE FLEXIBLE CONDUIT SYSTEM, INCLUDING ALL JOINTS SHALL HAVE A DEGREE OF PROTECTION OF IP67. CONDUIT FITTINGS SHALL BE NICKEL PLATED BRASS.
22. WHERE THE LENGTH OF FLEXIBLE CONDUIT BETWEEN ITEMS OF EQUIPMENT EXCEEDS 1000, THE FLEXIBLE CONDUIT SHALL BE CLAMPED TO THE STRUCTURE ADJACENT TO THE EQUIPMENT.

No.	REVISION DETAILS	DWN	DATE
0	ISSUED FOR TENDER	RK	16.04.21

CONSULTANT DETAILS:
GHD
57 Graham Street Nowra NSW 2541
T 61 2 4424 4900 F 61 2 4424 4999
E noamail@ghd.com W www.ghd.com
CONSULTANT REFERENCE No.

Shoalhaven Water
A Group of Shoalhaven City Council

DESIGNED: CP	DATE: 21.07.15	COMPANY: GHD	
DRAWN: CC	DATE: 21.07.15	COMPANY: GHD	
CHECKED: DB	DATE: 16.12.15	COMPANY: GHD	
APPROVED: CS	DATE: 16.04.21	COMPANY: GHD	

TITLE:
SHOALHAVEN WATER
ST ANNS PUMPING STATION UPGRADE
ELECTRICAL SERVICES
SITE LAYOUT

SIZE	SCALE	INDEX No.	DRAWING No.	SHEET	REV No.
A1	1:100m		23-1426641	225	0

Plot Date: 15/04/21 - 19:31 Cad File: C:\CAD\temp\AcPublish_630924\23-1426641-225.dwg

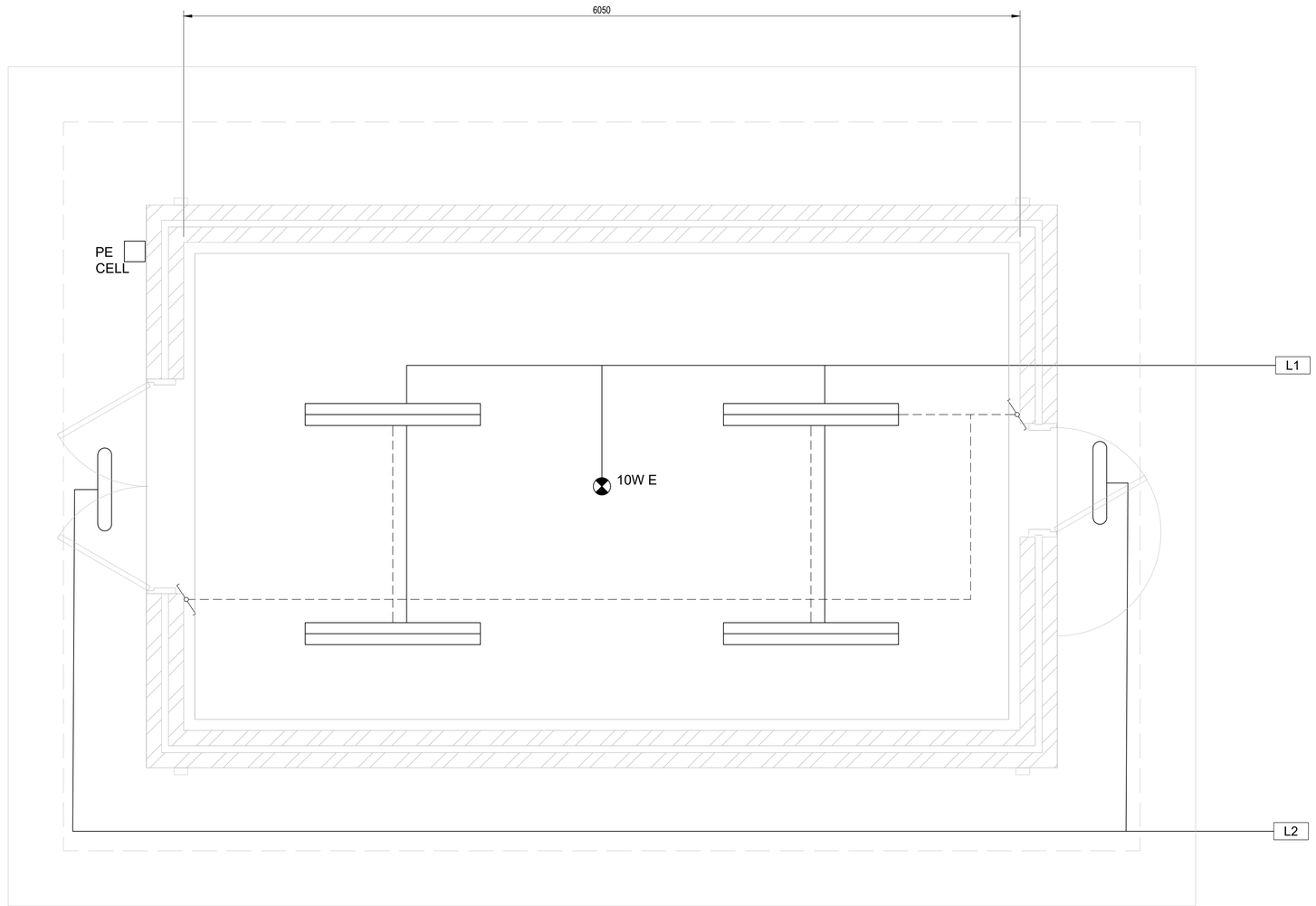

NOTES:

1 ALL WORK SHALL COMPLY WITH SHOALHAVEN WATER'S STANDARD SPECIFICATION, THE NEW SOUTH WALES SERVICE AND INSTALLATION RULES AND AS 3000.

2 THE FINAL LOCATION OF ALL EQUIPMENT SHALL BE DETERMINED ON SITE.

3 THE SWITCHGEAR AND CONTROL GEAR ASSEMBLY SHALL BE FIXED WITH A MINIMUM OF THREE HOT DIPPED GALVANISED SUPPORT BRACKETS TO OFFSET THE SCA FROM THE WALLS BY 50. THE SUPPORT BRACKETS SHALL BE FIXED TO THE WALLS USING 75 LONG x 10 DIAMETER STAINLESS STEEL MASONRY ANCHORS.

4 FLEXIBLE CONDUITS SHALL BE FLEXICON LPC OR RHINOFLEX CONDUITS. THE FLEXIBLE CONDUIT SYSTEM, INCLUDING ALL JOINTS SHALL HAVE A DEGREE OF PROTECTION OF IP67. CONDUIT FITTINGS SHALL BE NICKEL PLATED BRASS.

5 INTERNAL/EXTERNAL LIGHTING SHALL COMPLY TO AS 1680 & AS 2293 REQUIREMENTS

LEGEND:

PIERLITE 2 x 36W UNILUX ENCLOSED PRISMATIC LUMINAIRE.

PIERLITE 1 x 18W VANDALUX LUMINAIRE WITH OPAL DIFFUSER.

TWO WAY LIGHT SWITCH

PE CELL — PHOTO-ELECTRIC CELL

RS — DOOR ALARM (REED) SWITCH - MODEL 05515 BROWN REED SWITCH AVAILABLE FROM SECURITY MERCHANTS AUST. P/L

PIERLITE LIGHTING FIREFLY EMERGENCY LUMINAIRE

SWITCHROOM LIGHTING LAYOUT

SCALE 1:20

0 0.2 0.4 0.6 0.8 1.0m

SCALE 1:20 AT ORIGINAL SIZE

No.	REVISION DETAILS	DWN	DATE
0	ISSUED FOR TENDER	RK	16.04.21

CONSULTANT DETAILS:
GHD
57 Graham Street Nowra NSW 2541
T 61 2 4424 4900 F 61 2 4424 4999
E noamail@ghd.com W www.ghd.com

CONSULTANT REFERENCE No.

Shoalhaven Water
A Group of Shoalhaven City Council

DESIGNED: CP	DATE: 21.07.15	COMPANY: GHD	
DRAWN: CC	DATE: 21.07.15	COMPANY: GHD	
CHECKED: DB	DATE: 16.12.15	COMPANY: GHD	
APPROVED: CS	DATE: 16.04.21	COMPANY: GHD	

TITLE:
SHOALHAVEN WATER
ST ANNS PUMPING STATION UPGRADE
ELECTRICAL SERVICES
TYPICAL SWITCHBOARD DETAILS
SHEET 1 OF 2

SIZE	SCALE	INDEX No.	DRAWING No.	SHEET	REV No.
A1	1:20m		23-1426641	227	0

Plot Date: 15/04/21 - 19:31 Cad File: C:\CAD\temp\AcPublish_630924\23-1426641-227.dwg

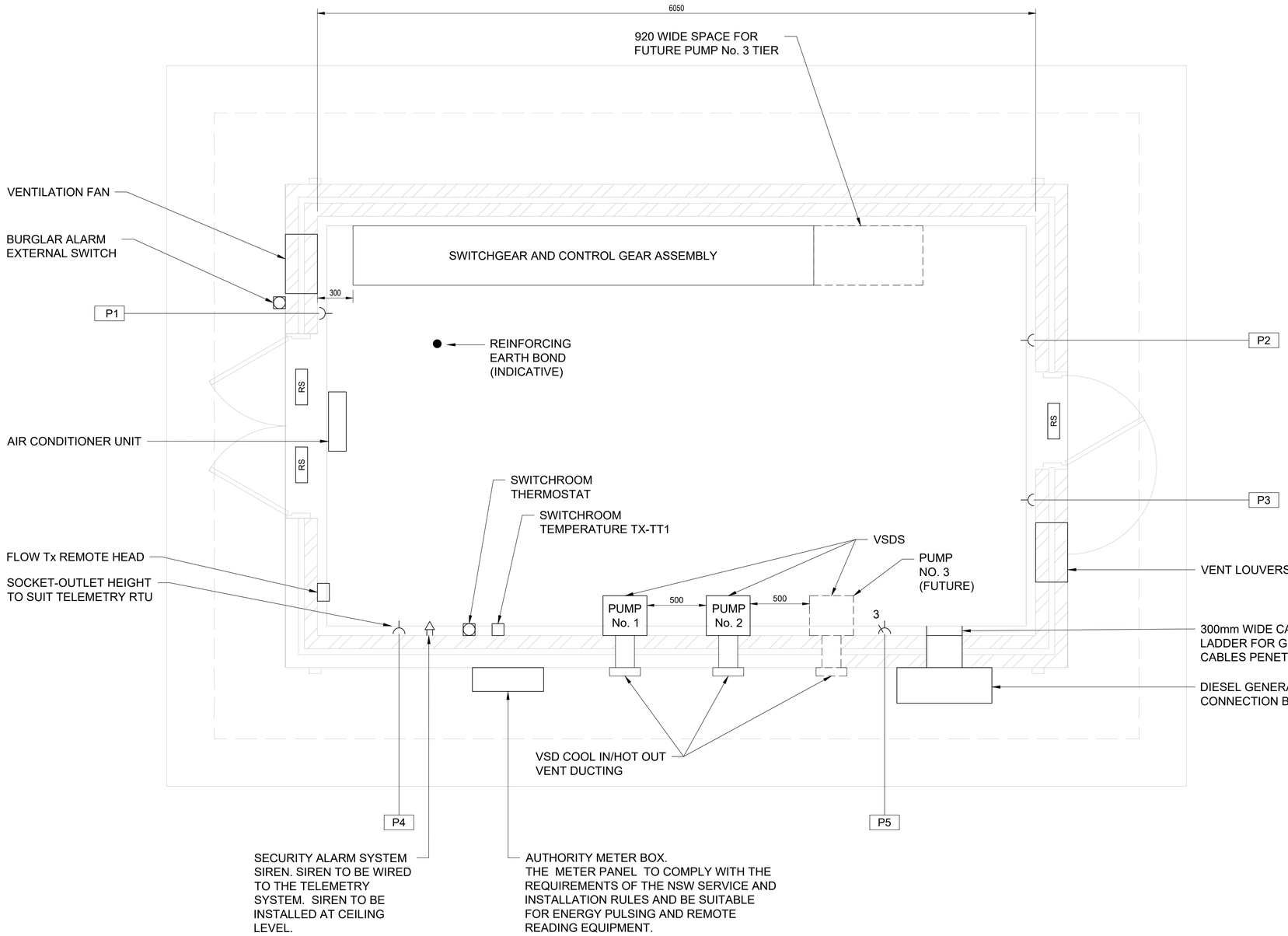

SWITCHROOM POWER AND EQUIPMENT LAYOUT

SCALE 1:20

0 0.2 0.4 0.6 0.8 1.0m

SCALE 1:20 AT ORIGINAL SIZE

NOTES:

1 ALL WORK SHALL COMPLY WITH SHOALHAVEN WATER'S STANDARD SPECIFICATION, THE NEW SOUTH WALES SERVICE AND INSTALLATION RULES AND AS 3000.

2 THE FINAL LOCATION OF ALL EQUIPMENT SHALL BE DETERMINED ON SITE.

3 THE SWITCHGEAR AND CONTROLGEAR ASSEMBLY SHALL BE FIXED WITH A MINIMUM OF THREE HOT DIPPED GALVANISED SUPPORT BRACKETS TO OFFSET THE SCA FROM THE WALLS BY 100 mm. THE SUPPORT BRACKETS SHALL BE FIXED TO THE WALLS USING 75 LONG x 10 DIAMETER STAINLESS STEEL MASONRY ANCHORS.

4 FLEXIBLE CONDUITS SHALL BE FLEXICON LPC OR RHINOFLEX CONDUITS. THE FLEXIBLE CONDUIT SYSTEM, INCLUDING ALL JOINTS SHALL HAVE A DEGREE OF PROTECTION OF IP67. CONDUIT FITTINGS SHALL BE NICKEL PLATED BRASS.

5 SWITCHROOM REINFORCING EARTH BOND SHALL HAVE THE SWITCHROOM BUILDING & CONCRETE REINFORCEMENT METALLIC OBJECTS INCLUDING COLUMNS & ROOF STRUCTURES ETC TIED TO THIS POINT. ELECTRICAL INSTALLATION CONTRACTOR TO TIE SWITCHROOM REINFORCING EARTH TO SWITCHBOARD EARTH.

LEGEND:

- SINGLE SOCKET OUTLET, 900 ABOVE FLOOR
- 3 — IP56 20 AMPERE THREE PHASE 5 PIN OUTLET, 900 ABOVE FLOOR
- PIERLITE 2 x 36W UNILUX ENCLOSED PRISMATIC LUMINAIRE.
- PIERLITE 1 x 18W VANDALUX LUMINAIRE WITH OPAL DIFFUSER.
- TWO WAY LIGHT SWITCH
- PE CELL — PHOTO-ELECTRIC CELL
- RS — DOOR ALARM (REED) SWITCH - MODEL 05515 BROWN REED SWITCH AVAILABLE FROM SECURITY MERCHANTS AUST. P/L
- SECURITY ALARM SIREN - MODEL 40169 12V AVAILABLE FROM SECURITY MERCHANTS AUST. P/L
- BURGLAR ALARM EXTERNAL KEY SWITCH - MODEL KD215003-8415/1.2 AVAILABLE FROM LOCK IT WELL P/L
- PIERLITE LIGHTING FIREFLY EMERGENCY LUMINAIRE

No.	REVISION DETAILS	DWN	DATE
0	ISSUED FOR TENDER	RK	16.04.21

CONSULTANT DETAILS:
GHD
57 Graham Street Nowra NSW 2541
T 61 2 4424 4900 F 61 2 4424 4999
E noamail@ghd.com W www.ghd.com
CONSULTANT REFERENCE No.

Shoalhaven Water
A Group of Shoalhaven City Council

DESIGNED: CP	DATE: 21.07.15	COMPANY: GHD	
DRAWN: CC	DATE: 21.07.15	COMPANY: GHD	
CHECKED: DB	DATE: 16.12.15	COMPANY: GHD	
APPROVED: CS	DATE: 16.04.21	COMPANY: GHD	

TITLE:
SHOALHAVEN WATER
ST ANNS PUMPING STATION UPGRADE
ELECTRICAL SERVICES
TYPICAL SWITCHBOARD DETAILS
SHEET 2 OF 2

SIZE	SCALE	INDEX No.	DRAWING No.	SHEET	REV No.
A1	1:20m		23-1426641	228	0

Plot Date: 15/04/21 - 19:51 Cad File: N:\AU\Wollongong\Projects\23\12540351\CADD\Drawings\St Anns\ELECT\23-1426641-228.dwg

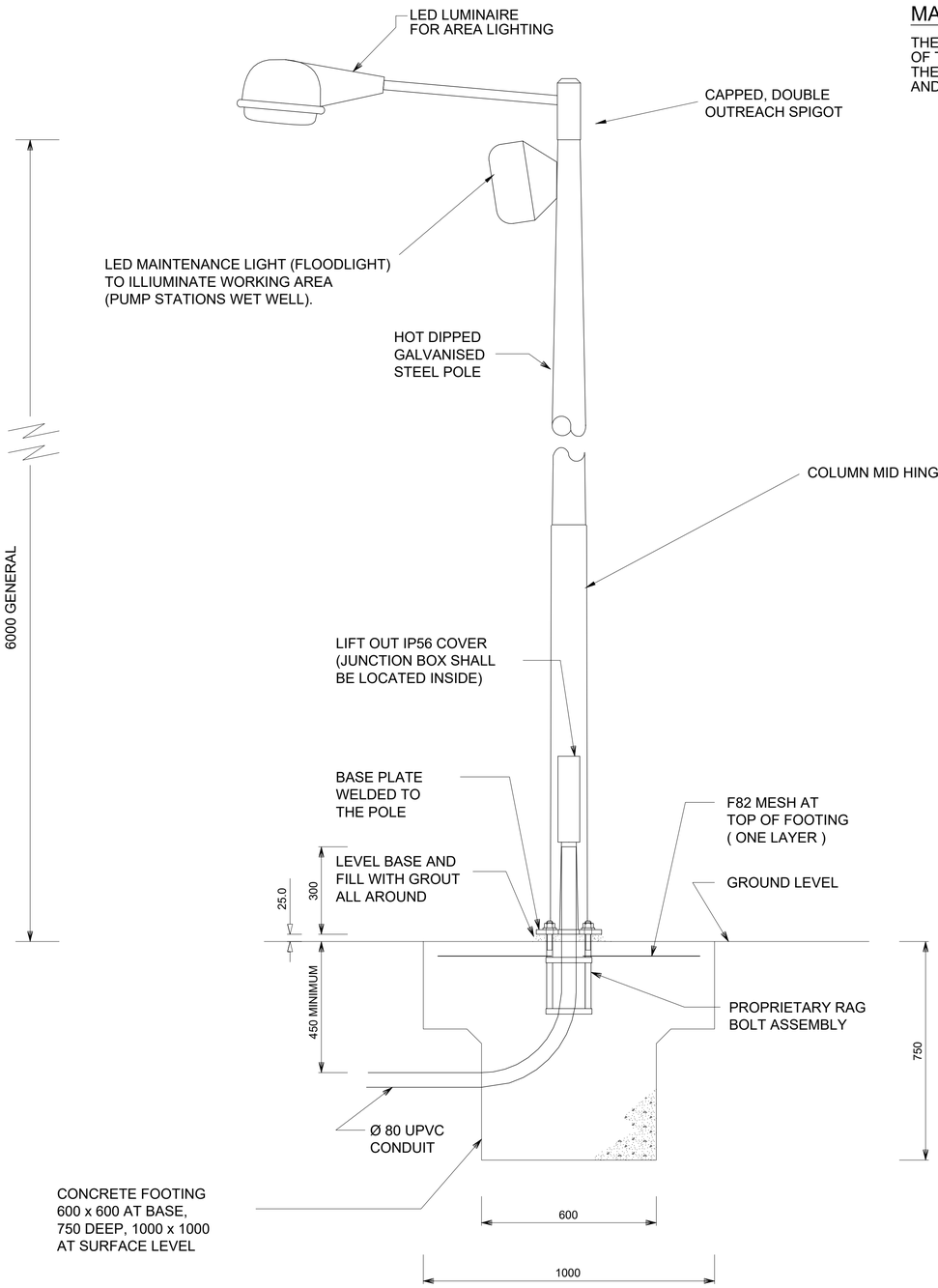

MAINTENANCE LIGHT

THE MAINTENANCE LIGHTING LUMINAIRE SHALL BE SELECTED TO PROVIDE MAXIMUM ILLUMINATION OF THE AREA FOR MAINTENANCE PURPOSES. THE LUMINAIRES SELECTED SHALL COMPLY WITH THE REQUIREMENTS OF AS 4282. SUBMIT PHOTOMETRIC DATA SHOWING THE AREA OF COVERAGE AND THE ILLUMINATION LEVELS.

NOTES

1 THE RAGBOLT ASSEMBLY, THE UNDERGROUND CONDUIT AND THE CONCRETE FOOTING SHOWN SHALL BE SUPPLIED AND INSTALLED AS PART OF THE SPECIFIED WORK .
THE DIMENSIONS OF FOOTING AND REINFORCING STEEL SHOWN ARE MINIMUM REQUIREMENTS . THE CONCRETE FOOTING SHALL BE DESIGNED IN ACCORDANCE WITH THE CODES FOR LIGHTING POLE INSTALLATION .

2 THE LADDER REST SHALL BE LOCATED SUCH THAT THE LUMINAIRE MAY BE SERVICED FROM THE ROADWAY SIDE .

3 THE COLUMNS SHALL BE CONSTRUCTED AND BALANCED TO ALLOW SERVICING BY ONE PERSON.

4 THE COLUMNS SHALL HAVE A BONDED BRAID BETWEEN MOVING PARTS TO PROVIDE A GOOD EARTHING AND TO PREVENT ARCING AT THE HINGE IN THE EVENT OF LIGHTNING STRIKES

5 THE COLUMNS LATCHING MECHANISMS SHALL HAVE A SAFETY INTERLOCK FOR OPERATION IN WINDY CONDITIONS AND HAVE PADLOCKING FACILITIES. PROVIDE PADLOCKS FOR EACH COLUMN, THE PADLOCKS SHALL BE KEYED TO CODE 92268.

6 THE GROUTING OF THE LIGHTING COLUMN'S BASE PLATE SHALL BE CARRIED OUT AS PART OF THE SPECIFIED WORK .

AREA LIGHTING COLUMN TYPICAL DETAIL

SCALE 1 : 10

AREA LIGHTING COLUMN SHOWN ONLY

0 0.1 0.2 0.3 0.4 0.5m
SCALE 1:10 AT ORIGINAL SIZE

No.	REVISION DETAILS	DWN	DATE
0	ISSUED FOR TENDER	RK	16.04.21

CONSULTANT DETAILS:
GHD
57 Graham Street Nowra NSW 2541
T 61 2 4424 4900 F 61 2 4424 4999
E noamail@ghd.com W www.ghd.com

CONSULTANT REFERENCE No.

Shoalhaven Water
A Group of Shoalhaven City Council

DESIGNED: CP	DATE: 21.07.15	COMPANY: GHD	
DRAWN: CC	DATE: 21.07.15	COMPANY: GHD	
CHECKED: DB	DATE: 16.12.15	COMPANY: GHD	
APPROVED: CS	DATE: 16.04.21	COMPANY: GHD	

TITLE:
SHOALHAVEN WATER
ST ANNS PUMPING STATION UPGRADE
ELECTRICAL SERVICES
TYPICAL AREA LIGHTING COLUMN DETAILS

SIZE	SCALE	INDEX No.	DRAWING No.	SHEET	REV No.
A1	N.T.S.		23-1426641	229	0

Plot Date: 15/04/21 - 19:32 Cad File: C:\CAD\temp\AcPublish_630924\23-1426641-229.dwg

- NOTICE -

THIS DOCUMENT CONTAINS PROPRIETARY INFORMATION OF DANFOSS DRIVES. IT IS LOANED BY DANFOSS DRIVES SUBJECT TO THE CONDITIONS THAT IT AND THE INFORMATION EMBODIED THEREIN SHALL BE USED ONLY FOR RECORD AND REFERENCE PURPOSES, SHALL NOT BE USED OR CAUSED TO BE USED IN ANY WAY PREJUDICIAL TO THE INTERESTS OF DANFOSS DRIVES, SHALL NOT BE REPRODUCED OR COPIED IN WHOLE OR IN PART OR DISCLOSED TO ANYONE WITHOUT THE DIRECT WRITTEN PERMISSION OF DANFOSS DRIVES, AND SHALL BE RETURNED UPON REQUEST.

REVISION HISTORY			
REV	ECN NUMBER	ENTRY BY	DATE
001	INITIAL RELEASE	PK	04/24/12
002	HP12060	KD	08/01/12

ASSY, BOTTOM DUCT

ITEM	PN	QTY	NOTES
1	177G5684	1	
2	177G5685	1	
3	177G5686	1	
4	177G5687	1	
5	177G5688	1	
6	177G5689	1	
7	177G5690	1	
8	177G5697	1	
9	177G5698	1	
10	177G5811	1	
11	26513	21	

ASSY, BOTTOM DUCT, SS

ITEM	PN	QTY	NOTES
1	177G6254	1	
2	177G5685	1	
3	177G5686	1	
4	177G6255	1	
5	177G5688	1	
6	177G5689	1	
7	177G5690	1	
8	177G5697	1	
9	177G6256	1	
10	177G6257	1	
11	177G1303	21	

ASSY, TOP PLATE (003)

ITEM	PN	QTY	NOTES
1	681X9143	11	
2	177G5654	1	
3	177G5655	1	
4	177G5662	1	USE TO SEAL THE CUT-OUT
5	177G5683	1	
6	177G5877	1	
7	177G5879	1	

ASSY, TOP PLATE , SS (003)

ITEM	PN	QTY	NOTES
1	177G1309	11	
2	177G6258	1	
3	177G5655	1	
4	177G5662	1	USE TO SEAL THE CUT-OUT
5	177G5683	1	
6	177G6519	1	
7	177G5879	1	

TORQUE REQUIREMENT:

1. M5 SCREWS/NUTS TORQUE TO 2.27 N-m (20.1 IN-LB) .
2. M10 NUTS TORQUE TO 19.09 N-m (169.0 IN-LB) .

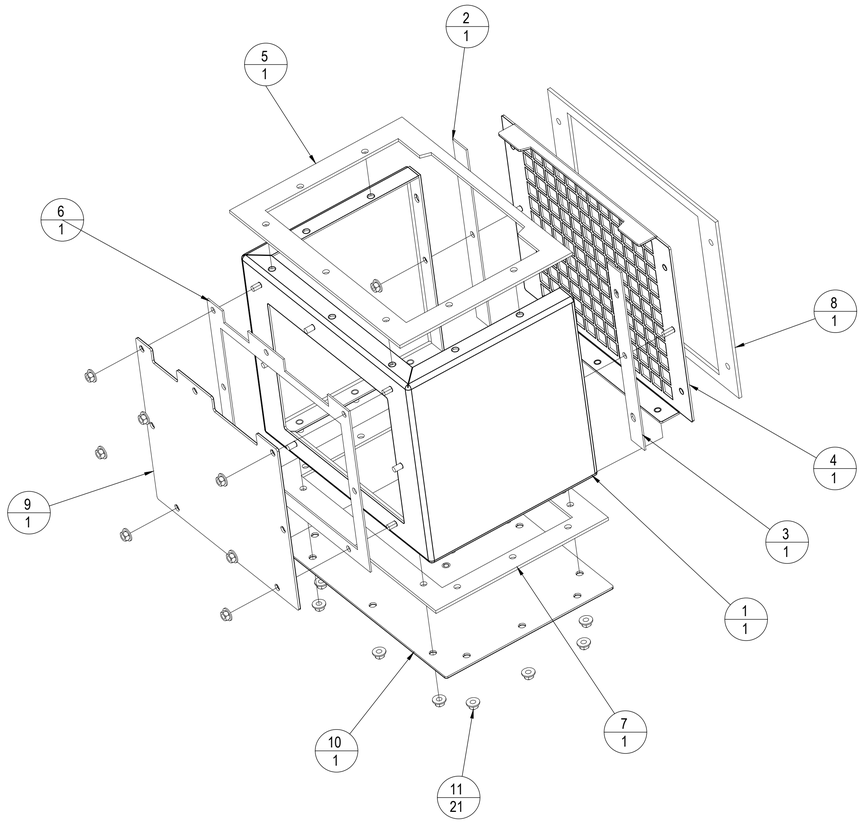

TOP OF DRIVE

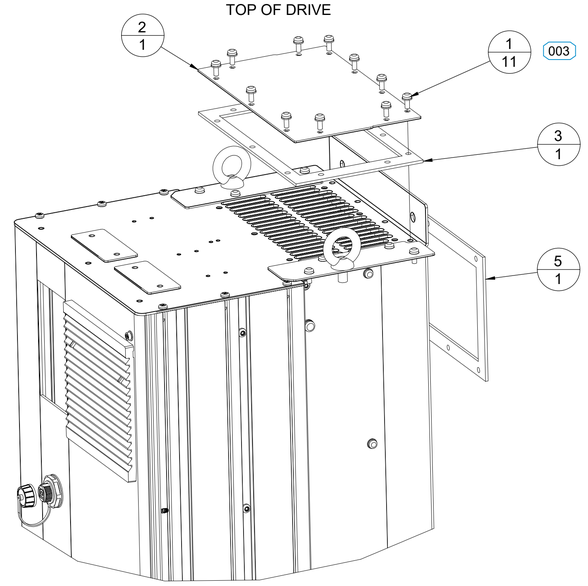

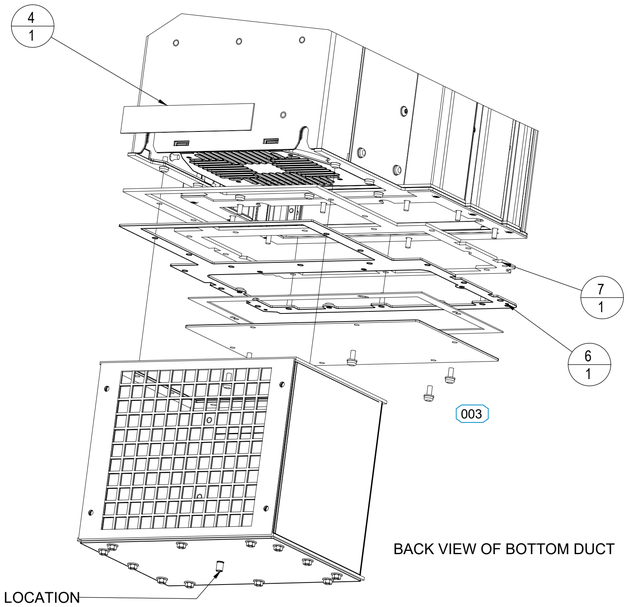

BACK VIEW OF BOTTOM DUCT

DRAIN HOSE FITTING LOCATION



DRIVE WITH TOP PLATE AND BOTTOM DUCT ASSY

No.	REVISION DETAILS	DWN	DATE
0	ISSUED FOR TENDER	RK	16.04.21

CONSULTANT DETAILS:
GHD
57 Graham Street Nowra NSW 2541
T 61 2 4424 4900 F 61 2 4424 4999
E noamail@ghd.com W www.ghd.com

CONSULTANT REFERENCE No.

Shoalhaven Water
A Group of Shoalhaven City Council

		DATE:	COMPANY:
DESIGNED:	CP	21.07.15	GHD
DRAWN:	CC	21.07.15	GHD
CHECKED:	DB	16.12.15	GHD
APPROVED:	CS	16.04.21	GHD

TITLE:
SHOALHAVEN WATER
ST ANNS PUMPING STATION UPGRADE
ELECTRICAL SERVICES
VSD BACK CHANNEL COOLING INSTR, DUCT, IN-BACK/OUT-BACK, D1H
SHEET 1 OF 2

SIZE:	SCALE:	INDEX No.	DRAWING No.	SHEET	REV No.
A1	N.T.S.		23-1426641	230	0

- NOTICE -

THIS DOCUMENT CONTAINS PROPRIETARY INFORMATION OF DANFOSS DRIVES. IT IS LOANED BY DANFOSS DRIVES SUBJECT TO THE CONDITIONS THAT IT AND THE INFORMATION EMBODIED THEREIN SHALL BE USED ONLY FOR RECORD AND REFERENCE PURPOSES, SHALL NOT BE USED OR CAUSED TO BE USED IN ANY WAY PREJUDICIAL TO THE INTERESTS OF DANFOSS DRIVES, SHALL NOT BE REPRODUCED OR COPIED IN WHOLE OR IN PART OR DISCLOSED TO ANYONE WITHOUT THE DIRECT WRITTEN PERMISSION OF DANFOSS DRIVES, AND SHALL BE RETURNED UPON REQUEST.



DRIVE WITH DUCT ASSEMBLYFOR WALL MOUNTING

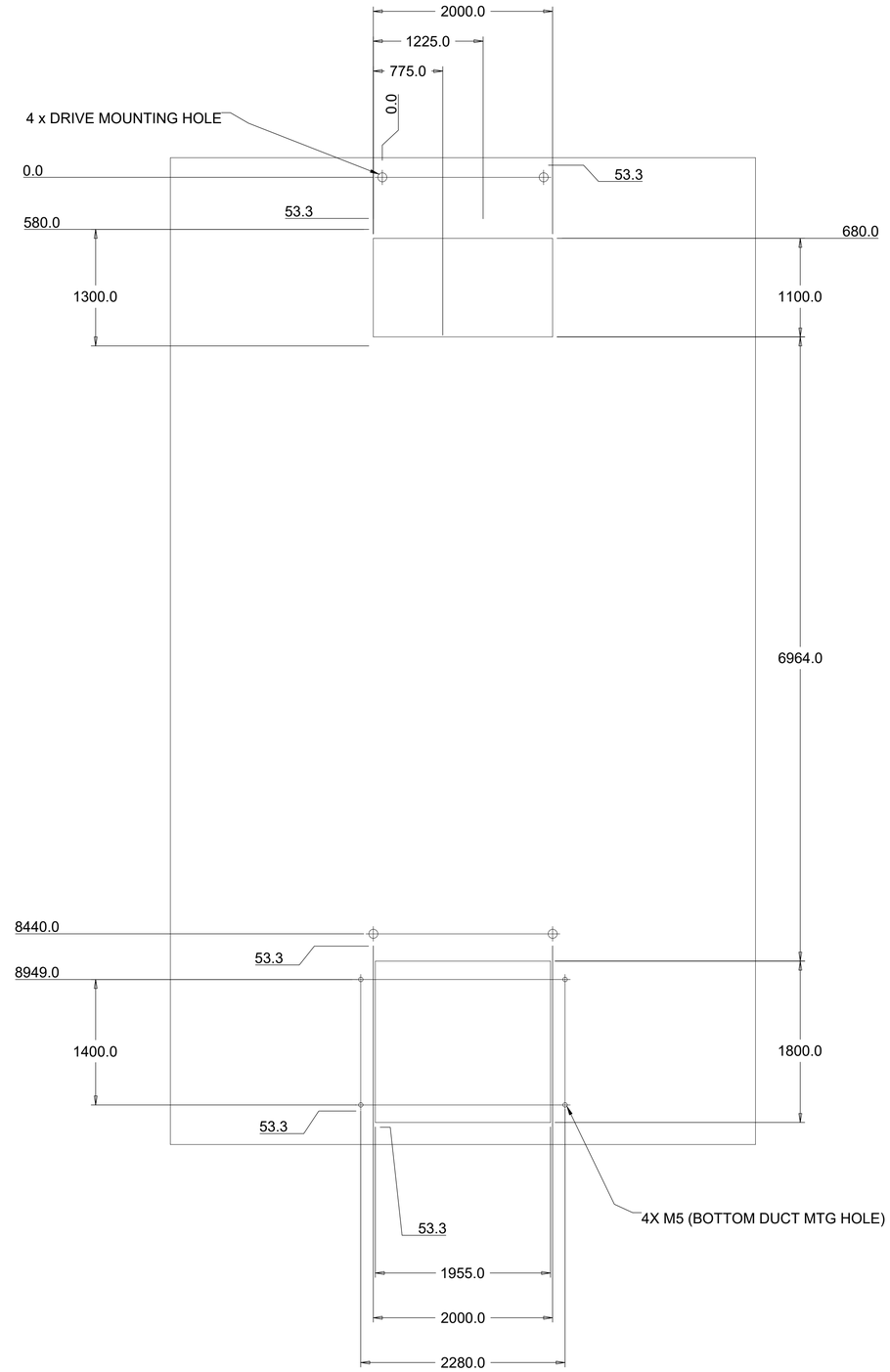

LOCATION OF DRIVE MOUNTING ON WALL

NOTES:

1. A DRAIN HOSE PROVIDED WITH KIT SHOULD BE ATTACHED IF THERE IS CONCERN THAT WATER MAY ACCUMULATE IN THE BOTTOM PLATE OF INTERNAL DUCT.
2. IF NOT, PLUG THE DRAIN PLUG WITH A SCREW PROVIDED WITH THE KIT, IT IS RECOMMENDED THAT TEFLON TAPE TO BE USED WITH THE SCREW TO SEAL THE DRAIN PLUG.

No.	REVISION DETAILS	DWN	DATE
0	ISSUED FOR TENDER	RK	16.04.21

CONSULTANT DETAILS:
GHD
57 Graham Street Nowra NSW 2541
T 61 2 4424 4900 F 61 2 4424 4999
E noamail@ghd.com W www.ghd.com

CONSULTANT REFERENCE No.

Shoalhaven Water
A Group of Shoalhaven City Council

DESIGNED: CP	DATE: 21.07.15	COMPANY: GHD	
DRAWN: CC	DATE: 21.07.15	COMPANY: GHD	
CHECKED: DB	DATE: 16.12.15	COMPANY: GHD	
APPROVED: CS	DATE: 16.04.21	COMPANY: GHD	

TITLE:
SHOALHAVEN WATER
ST ANNS PUMPING STATION UPGRADE
ELECTRICAL SERVICES
VSD BACK CHANNEL COOLING INSTR, DUCT, IN-BACK/OUT-BACK, D1H
SHEET 2 OF 2

SIZE	SCALE	INDEX No.	DRAWING No.	SHEET	REV No.
A1	N.T.S.		23-1426641	231	0



TYPICAL EXTERNAL VIEW OF THE BACK CHANNEL COOLING



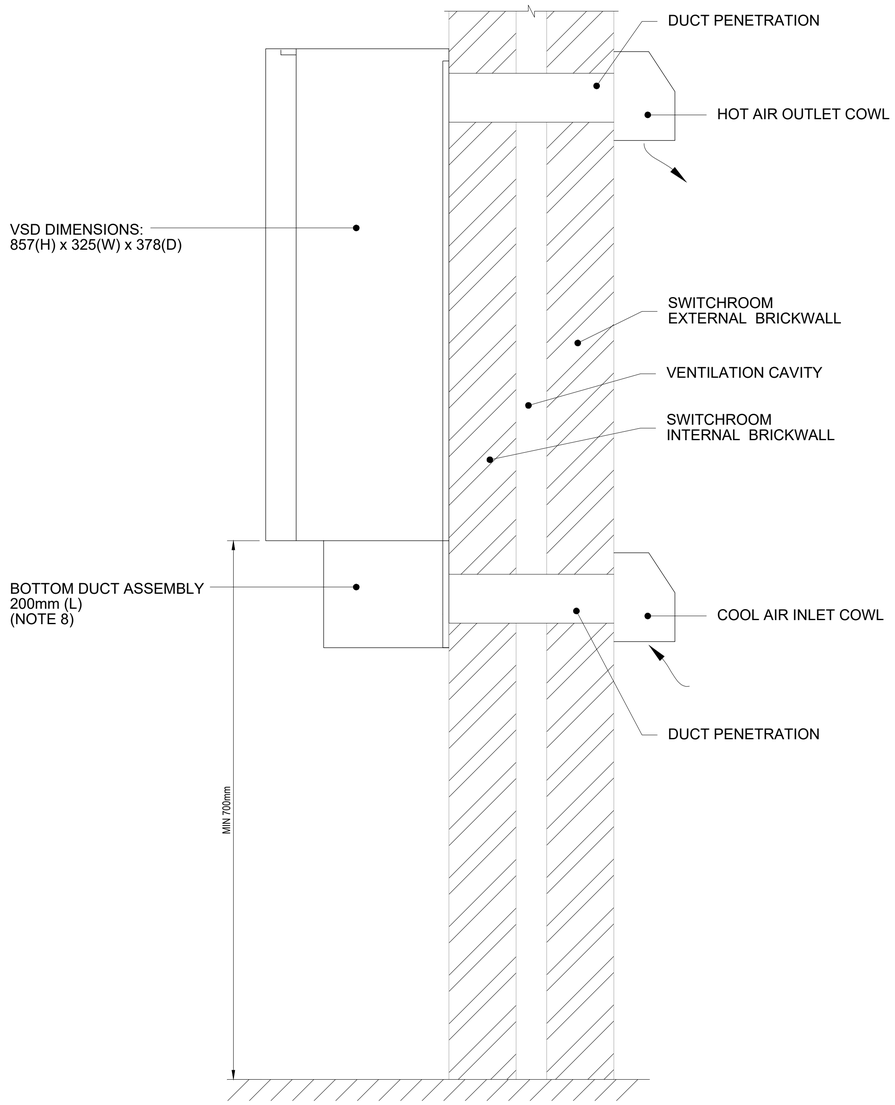

NOTES

1. EXTERNAL COWLS SHALL BE 316 SS AND BE SUITABLY SIZED TO ALLOW ADEQUATE/UNRESTRICTED AIR FLOW.
2. COWL OPENINGS SHALL BE COVERED BY 316 SS MESH/GUARD TO INHIBIT VERMIN ENTRY, BUT NOT RESTRICT AIR FLOW OR CREATE EXCESSIVE PRESSURE DROP.
3. REFER TO DANFOSS PROPRIETARY DOCUMENTATION FOR INSTALLATION GUIDELINES.
4. WALL PENETRATION DUCTING SHALL BE MADE FROM SUITABLE MATERIAL.
5. ALL WORK/FINISHING SHALL BE NEAT AND MAINTAIN BUILDING INTEGRITY.
6. COWL/DUCT PENETRATIONS SHALL BE DETERMINED BY THE CONTRACTOR SUCH THAT THERE IS A MINIMUM 700mm CLEARANCE FROM THE BASE OF THE VSD (NOT THE LOWER DUCT ASSEMBLY) TO FACILITATE CABLE TERMINATION.
7. WALL/CAVITY PENETRATION PERIMETERS SHALL BE ADEQUATELY SEALED TO EFFECTIVELY INHIBIT DUCT/MOISTURE PENETRATION.
8. BOTTOM DUCT ASSEMBLY PART OF BACK-CHANNEL COOLING KIT PART N° 176F3648

No.	REVISION DETAILS	DWN	DATE
0	ISSUED FOR TENDER	RK	16.04.21

CONSULTANT DETAILS:
GHD
57 Graham Street Nowra NSW 2541
T 61 2 4424 4900 F 61 2 4424 4999
E noamail@ghd.com W www.ghd.com

CONSULTANT REFERENCE No.

Shoalhaven Water
A Group of Shoalhaven City Council

DESIGNED: CP	DATE: 21.07.15	COMPANY: GHD
DRAWN: CC	DATE: 21.07.15	COMPANY: GHD
CHECKED: DB	DATE: 16.12.15	COMPANY: GHD
APPROVED: CS	DATE: 16.04.21	COMPANY: GHD

TITLE:
SHOALHAVEN WATER
ST ANNS PUMPING STATION UPGRADE
ELECTRICAL SERVICES
TYPICAL VSD BACK-CHANNEL COOLING INSTALLATION DETAIL

SIZE	SCALE	INDEX No.	DRAWING No.	SHEET	REV No.
A1	NTS		23-1426641	232	0

Plot Date: 15/04/21 - 19:33 Cad File: C:\CAD\temp\AcPublish_630924\23-1426641-232.dwg

CABLE No.	TO - FROM	CONDUIT SIZE AND TYPE	APPROX. LENGTH (m)	CONDUIT ID/ ROUTING (NOTE 1)	TYPE AND SIZE OF CABLE	VOLTAGE GRADE kV	CURRENT RATING & DERATING FACTORS TO AS 3008.1	VOLTAGE DROP FROM POA TO EQUIPMENT TO AS 3008.1	MAXIMUM CIRCUIT LENGTH FOR CORRECT OPERATION AGAINST INDIRECT CONTACT FAULT-LOOP IMPEDANCE	CIRCUIT DIAGRAM N°	TERMINATION DRAWING No
P001	SS TO PILLAR BOX	100 mm HD-UPVC	10 m	1	4 x 1 CORE 185 mm² XLPE/PVC	0.6/1.0 kV	363A	0.44 VOLTS	N/A	201	N/A
P001A	PILLAR BOX TO SCA CONSUMER MAINS	100 mm HD-UPVC	20 m	3	4 x 1 CORE 185 mm² XLPE/PVC	0.6/1.0 kV	363A	0.44 VOLTS	N/A	201	N/A
P002	SCA TO GENERATOR CONNECTION BOX	CABLE TRAY	10 m	N/A	4 x 1 CORE 95 mm² PVC/PVC FLEX	0.6/1.0 kV	250A	0.46 VOLTS	N/A	201	N/A
P003	SCA TO BUILDING LIGHTS CIRCUIT L1	CABLE TRAY	15 m	N/A	2c+E 1.5mm² PVC/PVC (FLAT)	0.6/1.0 kV	19A	0.7 VOLTS	120 m	203	N/A
P004	SCA TO SWITCHROOM VENT FAN	CABLE TRAY	15 m	N/A	2c+E 1.5mm² PVC/PVC (FLAT)	0.6/1.0 kV	19A	0.5 VOLTS	180 m	203	N/A
P005	SCA TO AREA LIGHTS CIRCUIT L2	80 mm HD-UPVC	20 m	7,8	2c+E 1.5mm² PVC/PVC	0.6/1.0 kV	19A	0.5 VOLTS	200 m	203	N/A
P006	SCA TO WELL MAINTENANCE LIGHT CIRCUIT L2	80 mm HD-UPVC	20 m	7,8	2c+E 1.5mm² PVC/PVC	0.6/1.0 kV	19A	0.5 VOLTS	210 m	203	N/A
P007	SCA TO BUILDING POWER CIRCUIT P1	CABLE TRAY	20 m	N/A	2c+E 2.5mm² PVC/PVC	0.6/1.0 kV	27A	1.1 VOLTS	100 m	203	N/A
P008	SCA TO 16A 3 PHASE OUTLET CIRCUIT P2	CABLE TRAY	10 m	N/A	4c+E 2.5mm² PVC/PVC	0.6/1.0 kV	20A	2.3 VOLTS	40 m	203	N/A
P010	SCA TO SWITCHROOM VENT FAN 2 - PEAK	CABLE TRAY	15 m	N/A	2c+E 2.5mm² PVC/PVC	0.6/1.0 kV	19A	0.5 VOLTS	180 m	253	N/A
P011	SCA TO FLOW TRANSMITTER	CABLE TRAY	10 m	N/A	2c+E 1.5mm² PVC/PVC	0.6/1.0 kV	18A	N/A	N/A	211,213	502.1,507
P101	SCA TO PUMP No.1 VSD	CABLE TRAY	10 m	N/A	3c+E 95mm² XLPE/PVC	0.6/1.0 kV	283A	0.8 VOLTS	75 m	207	501,504
P102A	PUMP No.1 VSD TO PUMP No.1 (NOTE 2)	100 mm HD-UPVC			3 x 35 mm² + 3 x 16/3E SUBMERSIBLE	0.6/1.0 kV	117A	3.2 VOLTS	79 m	207	504
P102B	PUMP No.1 VSD TO PUMP No.1 (NOTE 2)	100 mm HD-UPVC			3 x 35 mm² + 3 x 16/3E SUBMERSIBLE	0.6/1.0 kV	117A	3.2 VOLTS	79 m	207	504
P201	SCA TO PUMP No.2 VSD	CABLE TRAY	10 m	N/A	3c+E 95mm² XLPE/PVC	0.6/1.0 kV	283A	0.8 VOLTS	75 m	207	503,505
P202A	PUMP No.2 VSD TO PUMP No.2 (NOTE 2)	100 mm HD-UPVC		11A	3 x 35 mm² + 3 x 16/3E SUBMERSIBLE	0.6/1.0 kV	117A	3.2 VOLTS	79 m	207	504
P202B	PUMP No.2 VSD TO PUMP No.2 (NOTE 2)	100 mm HD-UPVC		11B	3 x 35 mm² + 3 x 16/3E SUBMERSIBLE	0.6/1.0 kV	117A	3.2 VOLTS	79 m	207	504
P301	SCA TO ODOUR CONTROL FAN No.1	100 mm HD-UPVC	30 m	13,15	2c+E 2.5mm² PVC/PVC	0.6/1.0 kV	25A	0.6 VOLTS	500 m	204	204
P401	SCA TO ODOUR CONTROL FAN No.2	100 mm HD-UPVC	30 m	13,15	2c+E 2.5mm² PVC/PVC	0.6/1.0 kV	25A	0.6 VOLTS	500 m	204	204
E001	SCA TO MAIN EARTH ELECTRODE	80 mm HD-UPVC	5 m	5	1 CORE 70mm² PVC EARTH	0.6/1.0 kV	N/A	N/A	N/A	201	N/A
E002	SCA TO GENERATOR CONNECTION BOX	CABLE TRAY	10 m	N/A	1 CORE 25mm² PVC EARTH	0.6/1.0 kV	N/A	N/A	N/A	201	N/A
E003	SCA TO WATER PIPE BOND	25 mm HD-UPVC	20 m		1 CORE 10mm² PVC EARTH	0.6/1.0 kV	N/A	N/A	N/A	201	N/A
E004	SCA TO SWITCHROOM REINFORCING BOND	CABLE TRAY	5 m	N/A	1 CORE 70mm² PVC EARTH	0.6/1.0 kV	N/A	N/A	N/A	201	N/A

NOTES

1. REFER TO ELECTRICAL SERVICES LAYOUT DRAWING 225 FOR CONDUIT LAYOUT AND ID/ROUTING DETAILS
2. CABLE IS SPECIFIED BY VSD MANUFACTURER - RUN IN SEPARATE CONDUITS TO LIMIT DERATING EFFECTS

No.	REVISION DETAILS	DWN	DATE
0	ISSUED FOR TENDER	RK	16.04.21

CONSULTANT DETAILS:
GHD
57 Graham Street Nowra NSW 2541
T 61 2 4424 4900 F 61 2 4424 4999
E noamail@ghd.com W www.ghd.com
CONSULTANT REFERENCE No.

Shoalhaven Water
A Group of Shoalhaven City Council

DESIGNED: CP	DATE: 21.07.15	COMPANY: GHD	
DRAWN: CC	DATE: 21.07.15	COMPANY: GHD	
CHECKED: DB	DATE: 16.12.15	COMPANY: GHD	
APPROVED: CS	DATE: 16.04.21	COMPANY: GHD	

TITLE:
SHOALHAVEN WATER
ST ANNS PUMPING STATION UPGRADE
ELECTRICAL SERVICES
CABLE SHEDULE SHEET 1 OF 3

SIZE	SCALE	INDEX No.	DRAWING No.	SHEET	REV No.
A1	N.T.S.		23-1426641	401	0

Plot Date: 15/04/21 - 19:33 Cad File: C:\CAD\temp\AcPublish_630924\23-1426641-401.dwg

CABLE No.	TO - FROM	CONDUIT SIZE AND TYPE	APPROX. LENGTH (m)	CONDUIT ID/ ROUTING (NOTE 1)	TYPE AND SIZE OF CABLE	VOLTAGE GRADE kV	CURRENT RATING & DERATING FACTORS TO AS 3008.1	VOLTAGE DROP FROM POA TO EQUIPMENT TO AS 3008.1	MAXIMUM CIRCUIT LENGTH FOR CORRECT OPERATION AGAINST INDIRECT CONTACT FAULT-LOOP IMPEDANCE	CIRCUIT DIAGRAM N°	TERMINATION DRAWING No
C001	SCA TO METER PANEL	CABLE TRAY	10 m	N/A	10c + E 2.5 mm² PVC/PVC	0.6/1.0 kV	NONE	N/A	N/A	201	N/A
C002	SCA TO PE CELL	CABLE TRAY	10 m	N/A	3c + E 1.5 mm² PVC/PVC	0.6/1.0 kV	NONE	N/A	N/A	204	N/A
C003	SCA TO ALARM BEACON	CABLE TRAY	10 m	N/A	2c + E 1.5 mm² PVC/PVC	0.6/1.0 kV	NONE	N/A	N/A	211	502.1
C101	SCA TO PUMP No.1 VSD	CABLE TRAY	10 m	N/A	6c + E 1.5 mm² PVC/PVC	0.6/1.0 kV	NONE	N/A	N/A	209	501 504
C102	SCA TO PUMP No.1 VSD	100 mm HD - UPVC	30 m	11	12c 1.5 mm² PVC/PVC PROPRIETARY		NONE	N/A	N/A	207	
C201	SCA TO PUMP No.2 VSD	CABLE TRAY	10 m	N/A	6c + E 1.5 mm² PVC/PVC	0.6/1.0 kV	NONE	N/A	N/A	209	503 505
C202	SCA TO PUMP No.1 VSD	100 mm HD - UPVC	30 m	11	12c 1.5 mm² PVC/PVC PROPRIETARY		NONE	N/A	N/A	207	
J001	SCA TO WET WELL LEVEL TRANSMITTER LT1	80 mm HD - UPVC	30 m	12	1pr + Sc 1.5mm²	N/A	NONE	N/A	N/A	202,213	502.4
J002	SCA TO WET WELL LEVEL TRANSMITTER LT2	80 mm HD - UPVC	30 m	12	1pr + Sc 1.5mm²	N/A	NONE	N/A	N/A	202,213	502.4
J003	SCA TO WET WELL LEVEL (BFL) REGULATOR S8	80 mm HD - UPVC	30m	12	PROPRIETARY	N/A	NONE	N/A	N/A	202,214	502.1
J004	SCA TO PRESSURE TRANSMITTER PT1	80 mm HD - UPVC	30m	6,21	1pr + Sc 1.5mm² PVC	N/A	NONE	N/A	N/A	202,214	502.1
J005	SCA TO WET WELL LEVEL (TFL) REGULATOR S6	80 mm HD - UPVC	30m	12	PROPRIETARY	N/A	NONE	N/A	N/A	202,214	502.1
J006	RTU TO WET WELL LEVEL (EXTRA HIGH) REGULATOR S71	80 mm HD - UPVC	30m	12	PROPRIETARY	N/A	NONE	N/A	N/A	202,214	502.1
J007	SCA TO SWITCHROOM TEMPERATURE TRANSMITTER TT1	CABLE TRAY	10 m	N/A	1pr + Sc 1.5mm²	N/A	NONE	N/A	N/A	202,213	502.4
J008	RTU TO WET WELL LEVEL (OVERFLOW) REGULATOR S70	80 mm HD - UPVC	30m	12	PROPRIETARY	N/A	NONE	N/A	N/A	202,205	506
J009	SCA TO FLOW TRANSMITTER FT1	CABLE TRAY	10m	N/A	2pr + Sc 1.5mm² PVC	N/A	NONE	N/A	N/A	202,213,215	502.2,507
J010	SCA TO FLOW TRANSMITTER FT1	CABLE TRAY	10m	N/A	1pr + Sc 1.5mm² PVC	N/A	NONE	N/A	N/A	202,213,217	502.4,507
J011	FLOW TRANSMITTER FT1 TO FLOWMETER FE1	50 mm HD - UPVC	48m	14,23	PROPRIETARY	N/A	NONE	N/A	N/A	202,213	507
J012	RTU TO EMERGENCY STORAGE TANK LEVEL TRANSMITTTER S73	50 mm HD - UPVC	20m	16,18	1pr + Sc 1.5mm²	N/A	NONE	N/A	N/A	202,205	506
J013	WELL-WASHER ELECTRIC SOLENOID	50 mm HD - UPVC	10m	25	2c + E 1.5 mm² PVC	0.6/1.0 kV	NONE	N/A	N/A	211	
J014	SCA TO PUMP No.1 VSD	CABLE TRAY	10m	N/A	CAT 6 ETHERNET	N/A	NONE	N/A	100m	207,212	N/A
J015	SCA TO PUMP No.2 VSD	CABLE TRAY	10m	N/A	CAT 6 ETHERNET	N/A	NONE	N/A	100m	207,212	N/A

NOTES

1 REFER TO ELECTRICAL SERVICES LAYOUT DRAWING 225 FOR CONDUIT LAYOUT AND ID/ROUTING DETAILS

No.	REVISION DETAILS	DWN	DATE
0	ISSUED FOR TENDER	RK	16.04.21

CONSULTANT DETAILS:
GHD
57 Graham Street Nowra NSW 2541
T 61 2 4424 4900 F 61 2 4424 4999
E noamail@ghd.com W www.ghd.com

CONSULTANT REFERENCE No.

Shoalhaven Water
A Group of Shoalhaven City Council

DESIGNED: CP	DATE: 21.07.15	COMPANY: GHD	
DRAWN: CC	DATE: 21.07.15	COMPANY: GHD	
CHECKED: DB	DATE: 16.12.15	COMPANY: GHD	
APPROVED: CS	DATE: 16.04.21	COMPANY: GHD	

TITLE:
SHOALHAVEN WATER
ST ANNS PUMPING STATION UPGRADE
ELECTRICAL SERVICES
CABLE SCHEDULE SHEET 2 OF 3

SIZE	SCALE	INDEX No.	DRAWING No.	SHEET	REV No.
A1	N.T.S.		23-1426641	402	0

Plot Date: 15/04/21 - 19:33 Cad File: C:\CAD\temp\AcPublish_630924\23-1426641-402.dwg

CABLE No.	TO - FROM	CONDUIT SIZE AND TYPE	APPROX. LENGTH (m)	CONDUIT ID/ ROUTING (NOTE 1)	TYPE AND SIZE OF CABLE	VOLTAGE GRADE kV	CURRENT RATING & DERATING FACTORS TO AS 3008.1	VOLTAGE DROP FROM POA TO EQUIPMENT TO AS 3008.1	MAXIMUM CIRCUIT LENGTH FOR CORRECT OPERATION AGAINST INDIRECT CONTACT FAULT-LOOP IMPEDANCE	CIRCUIT DIAGRAM N°	TERMINATION DRAWING No
J016	TELEMETRY RTU TO SECURITY ALARM SIREN	CABLE TRAY	10 m	N/A	1pr + Sc 1.5mm² PVC		NONE	N/A	N/A	205	506
J017	TELEMETRY RTU TO SCA	CABLE TRAY	10 m	N/A	CAT6 ETHERNET		NONE	N/A	N/A	205,212	506
J018	SCA TO SWITCHROOM THERMOSTAT	CABLE TRAY	10 m	N/A	1pr + Sc 1.5mm² PVC		NONE	N/A	N/A	214	502.1
J019	SCA TO SWITCHROOM DOOR No.1A	CABLE TRAY	10 m	N/A	1pr + Sc 1.5mm² PVC		NONE	N/A	N/A	214	502.1
J020	SCA TO SWITCHROOM DOOR No.1B	CABLE TRAY	10 m	N/A	1pr + Sc 1.5mm² PVC		NONE	N/A	N/A	214	502.1
J021	SCA TO SWITCHROOM DOOR No.2	CABLE TRAY	10 m	N/A	1pr + Sc 1.5mm² PVC		NONE	N/A	N/A	214	502.1
J022	SCA TO EXTERNAL KEY SWITCH	CABLE TRAY	10 m	N/A	1pr + Sc 1.5mm² PVC		NONE	N/A	N/A	214	502.1
J102	SCA TO PUMP No.1 NO FLOW LIMIT SWITCH	50mm HD-UPVC	30 m	6,21	1pr + Sc 1.5mm² PVC/PVC	0.6/1.0 kV	NONE	N/A	N/A	202,207	501
J105	SCA TO PUMP No.1 VSD	CABLE TRAY	10 m	N/A	4pr + Sc 1.5mm² PVC/PVC	0.6/1.0 kV	NONE	N/A	N/A	202,207	501,504
J106	SCA TO PUMP No.1 VSD	CABLE TRAY	10 m	N/A	2pr + Sc 1.5mm² PVC/PVC	0.6/1.0 kV	NONE	N/A	N/A	209,217,218	502.4,504
J202	SCA TO PUMP No.2 NO FLOW LIMIT SWITCH	50mm HD-UPVC	30 m	6,21	1pr + Sc 1.5mm² PVC/PVC	0.6/1.0 kV	NONE	N/A	N/A	202,207	503
J205	SCA TO PUMP No.2 VSD	CABLE TRAY	10 m	N/A	4pr + Sc 1.5mm² PVC/PVC	0.6/1.0 kV	NONE	N/A	N/A	202,207	503,505
J206	SCA TO PUMP No.2 VSD	CABLE TRAY	10 m	N/A	2pr + Sc 1.5mm² PVC/PVC	0.6/1.0 kV	NONE	N/A	N/A	209,217,218	502.4,505
J300	SCA TO NOWRA WWTP INCOMING MAINS	100mm HD UPVC	3000 m	24,25	12 CORE SINGLE MODE LOOSE-TUBE	N/A	N/A	N/A	N/A	212	N/A

NOTES

1 REFER TO ELECTRICAL SERVICES LAYOUT DRAWING 225 FOR CONDUIT LAYOUT AND ID/ROUTING DETAILS

No.	REVISION DETAILS	DWN	DATE
0	ISSUED FOR TENDER	RK	16.04.21

CONSULTANT DETAILS:
GHD
57 Graham Street Nowra NSW 2541
T 61 2 4424 4900 F 61 2 4424 4999
E noamail@ghd.com W www.ghd.com

CONSULTANT REFERENCE No.

Shoalhaven Water
A Group of Shoalhaven City Council

DESIGNED: CP	DATE: 21.07.15	COMPANY: GHD	
DRAWN: CC	DATE: 21.07.15	COMPANY: GHD	
CHECKED: DB	DATE: 16.12.15	COMPANY: GHD	
APPROVED: CS	DATE: 16.04.21	COMPANY: GHD	

TITLE:
SHOALHAVEN WATER
ST ANNS PUMPING STATION UPGRADE
ELECTRICAL SERVICES
CABLE SCHEDULE SHEET 3 OF 3

SIZE	SCALE	INDEX No.	DRAWING No.	SHEET	REV No.
A1	N.T.S.		23-1426641	403	0

Plot Date: 15/04/21 - 19:34 Cad File: C:\CAD\temp\AcPublish_630924\23-1426641-403.dwg

NOTES:
*** DENOTES WIRING BY CONTRACTOR

1. INTERCONNECTION DIAGRAMS 501, 502.1, 502.3, 502.4, 503 AND 506 UPDATED FOR ONLY NEW ITEMS FOR ST ANNS SPS UPGRADE. INTERCONNECTION DETAILS FOR EQUIPMENT BASED ON WAE DRAWINGS FROM CONCORD WAY SPS AND ARE ASSUMED ACCURATE. DETAILS SHALL BE CHECKED, CONFIRMED AND UPDATED BY THE CONTRACTOR

T4,T5,T6
TEST LINKS

C10	.	C11	C11 — R			
C14	.	C15	C15 — W			
C16	.	C17	C17 — B			
C12	●	C13	C13 — Bk			
C12	●	C13				
C12	●	C13	E — G/Y			

SUPPLY MONITORING

Bn/R — E85	G4B	b	G4B
Bn/R — E86	G4C	b	G4C
Bn/R — E86A	G4D	b	G4D

WET WELL WASH SV

Bn/R — E87	G4E	b	G4E
Bn/R — E88	E88	b	E88
Bn/R — E89	E89	b	E89
G/Y — E	⏚		⏚
B/W — E90	303	b	303
B/W — E91	03C	b	03C
	SP	b	SP
	SP	b	SP
B/W — E95	0004	b	0004
B/W — E96	00C	b	00C
B/W — E97	0005	b	0005
B/W — E98		b	

PUMP STARTER No.1

Gy — 02	02.1	.	02.1
Gy — 06	06	.	06
	02.2	.	02.2
Gy — 18	18	.	18
Gy — 19	19	.	19
Gy — 153	153	.	153
	02.3	.	02.3
	22	.	22
Gy — 33	33	.	33
Gy — 39	39	.	39
	SP	.	SP
	SP	.	SP
G/Y — E	⏚		⏚
B/W — 27	27	b	27
B/W — 28	28	b	28
B/R — 60	0300	b	0300
B/W — 69	03C	b	03C
B/R — 61	0305	b	0305
B/W — 68	03C	b	03C
B/W — 83	0101	b	0101
B/W — 84	01C	b	01C
B/W — 88	0107	b	0107
B/W — 89		b	
B/W — 91	0100	b	0100
B/W — 92		b	
B/W — 94	0102	b	0102
B/W — 95		b	
B/W — 98	0105	b	0105
B/W — 99		b	99
B/W — 190	0106	b	0106
B/W — 191		b	
B/W — 192	0104	b	0104
B/W — 193		b	
B/W — 194	0103	b	0103
B/W — 195		b	
Bn — 20	20	b	20
Bn — 21	21	b	21
B/R — 100	100	b	100
B/R — 103	103	b	103
B/R — 104	104	b	104
	.	b	SP
Bn — 23	23	b	SP
Bn — 24	24	b	SP
	Sc		⏚

6 CORES 1.5mm.sq	WIRES	TO MAIN SWITCH SECTION C1 (See Dwg. -206)
4P + Sc 1.5mm.sq	J105	TO PUMP 1 VSD (See Dwg. -504)
2c+E 1.5mm.sq	J013	TO WELL-WASHER SOLENOID (See Dwg. -211)
2 CORES 1.5mm.sq	WIRES	TO SCA CABLE ZONE D0 (See Dwg. -502.2)
2 CORES 1.5mm.sq	WIRES	TO SCA CABLE ZONE D0 (See Dwg. -502.2)
1P + Sc 1.5mm.sq	J102	TO PUMP 1 NO FLOW LIMIT SWITCH CONNECT N/O
6c+E 1.5mm.sq	C101	TO PUMP 1 VSD (See Dwg. -504)
2 CORES 1.5mm.sq	WIRES	TO SCA CABLE ZONE D0 (See Dwg. -502.2)
16 CORES 1.5mm.sq	WIRES	TO SCA CABLE ZONE D0 (See Dwg. -502.1)

No.	REVISION DETAILS	DWN	DATE
0	ISSUED FOR TENDER	RK	16.04.21

CONSULTANT DETAILS:
GHD
57 Graham Street Nowra NSW 2541
T 61 2 4424 4900 F 61 2 4424 4999
E noamail@ghd.com W www.ghd.com

CONSULTANT REFERENCE No.

Shoalhaven Water
A Group of Shoalhaven City Council

DESIGNED: CP	DATE: 21.07.15	COMPANY: GHD	
DRAWN: CC	DATE: 21.07.15	COMPANY: GHD	
CHECKED: DB	DATE: 16.12.15	COMPANY: GHD	
APPROVED: CS	DATE: 16.04.21	COMPANY: GHD	

TITLE:
SHOALHAVEN WATER
ST ANNS PUMPING STATION UPGRADE
ELECTRICAL SERVICES
SCA CABLE ZONE B0
INTERCONNECTION DIAGRAM

SIZE	SCALE	INDEX No.	DRAWING No.	SHEET	REV No.
A1	N.T.S.		23-1426641	501	0

NOTE:
'**' DENOTES WIRING BY CONTRACTOR

MAIN SWITCH COMPARTMENT

B/W	15	15	b	0000	0000
B/W	16	16	b	00C	00C
B/W	17	17	b	0001	0001
B/W	18	18	b		
B/W	E87	E87	b	0002	0002
B/W	E92	E92	b		

AUTO CONTROLS

R	U24	U24	.	U24	U24	Gy
Bk	U99	U99	.	U99	U99	Bk
G/Y	E	⏚			E	G/Y
R	BA	BA	.	G3A	G3A	Gy
Bk	BN	BN	.	G99	G99	Bk
G/Y	E	⏚			E	G/Y
Bn/R	** G4B	G4B	b		G4B	Bn/R
Bn/R	** G4C	G4C	b		G4C	Bn/R
Bn/R	** G4D	G4D	b		G4D	Bn/R
Bn/R	** G4E	G4E	b		G4E	Bn/R
B/W	** 0000	0000	b		0000	B/W
B/W	** 00C	00C.1	b		00C.1	B/W
B/W	** 0001	0001	b		0001	B/W
B/W	** 0002	0002	b		0002	B/W
B/W	** 00C	00C.2	b		00C.2	
B/W	** 0004	0004	b		0004	B/W
B/W	** 0005	0005	b		0005	B/W
		00C.3	b		00C.3	
		0006	b		0006	B/W
		S71NC	b		S71NC	
		00C.4	b		00C.4	
		0007	b		0007	B/W
		S72NC	b		S72NC	
B	00C	00C.5	b		00C.5	
Bk	0008	0008	b		0008	B/W
Bn	S6NC	S6NC	b		S6NC	
		00C.6	b		00C.6	
		0009	b		0009	B/W
		S7NC	b		S7NC	
B	00C	00C.7	b		00C.7	
Bk	0010	0010	b		0010	B/W
Bn	S8NC	S8NC	b		S8NC	
		00C.9	b		00C.9	
		0011	b		0011	B/W
		00C.8	b		00C.8	
		0012	b		0012	B/W
		00C.9	b		00C.9	
		0013	b		0013	B/W
1Bk	00C	00C.10	b		00C.10	
1W	0014	0014	b		0014	B/W
		00C.11	b		00C.11	
		0015	b		0015	B/W
	Sc	⏚				
B/W	** 01C	01C.1	b		01C.1	01C B/W
B/W	** 0100	0100	b		0100	B/W
B/W	** 0101	0101	b		0101	B/W
B/W	** 0102	0102	b		0102	B/W
B/W	** 0103	0103	b		0103	B/W
B/W	** 0104	0104	b		0104	B/W
B/W	** 0105	0105	b		0105	B/W
B/W	** 0106	0106	b		0106	B/W
B/W	** 0107	0107	b		0107	B/W
		01C.2	b		01C.2	
1Bk		0108	b		0108	B/W
1W		01C.3	b		01C.3	
1Bk		0109	b		0109	B/W
1W		01C.4	b		01C.4	
1Bk		0110	b		0110	B/W
1W		01C.5	b		01C.5	
		0111	b		0111	B/W
	01C	01C.6	b		01C.6	
	0112	0112	b		0112	B/W
	01C	01C.7	b		01C.7	
	0113	0113	b		0113	B/W
	01C	01C.8	b		01C.8	
	0114	0114	b		0114	B/W
1Bk	01C	01C.9	b		01C.9	
1W	0115	0115	b		0115	B/W

3 core 1.5mm.sq	1P + Sc 1.5mm.sq	1P + Sc 1.5mm.sq	1P + Sc 1.5mm.sq	2c + E 1.5mm.sq
J003	J018	J019	J020	P011
TO WELL LEVEL REGULATOR S8 (BFL)	TO SWITCHROOM THERMOSTAT CONNECT N/O	TO SWITCHROOM DOOR No.1A REED SWITCH CONNECT N/O	TO SWITCHROOM DOOR No.1B REED SWITCH CONNECT N/O	TO FLOW TRANSMITTER FT1 (See Dwg. 507)

3 CORE 0.5mm.sq	1P + Sc 1.5mm.sq	16 CORES 1.5mm.sq	2c + E 1.5mm.sq	1P + Sc 1.5mm.sq
J005	J021	WIRES	C003	J022
TO WELL LEVEL REGULATOR S6 (TFL)	TO SWITCHROOM DOOR No.2 REED SWITCH CONNECT N/O	TO SCA CABLE ZONE B0 (See Dwg. -501)	TO EXTERNAL ALARM BEACON	TO BURGLAR ALARM EXTERNAL KEY SWITCH CONNECT N/O

CONTINUED DRAWING 502.2

NOTES:
'**' DENOTES WIRING BY CONTRACTOR

1. INTERCONNECTION DIAGRAMS 501, 502.1, 502.3, 502.4, 503 AND 506 UPDATED FOR ONLY NEW ITEMS FOR ST ANNS SPS UPGRADE. INTERCONNECTION DETAILS FOR EQUIPMENT BASED ON WAE DRAWINGS FROM CONCORD WAY SPS AND ARE ASSUMED ACCURATE. DETAILS SHALL BE CHECKED, CONFIRMED AND UPDATED BY THE CONTRACTOR

No.	REVISION DETAILS	DWN	DATE
0	ISSUED FOR TENDER	RK	16.04.21

CONSULTANT DETAILS
GHD
57 Graham Street Nowra NSW 2541
T 61 2 4424 4800 F 61 2 4424 4899
E nsamail@ghd.com W www.ghd.com
CONSULTANT REFERENCE No.

Shoalhaven Water
A Group of Shoalhaven City Council

	DESIGNED	DRAWN	CHECKED	APPROVED
	CP	CC	DB	CS
DATE	21.07.15	21.07.15	16.12.15	16.04.21
COMPANY	GHD	GHD	GHD	GHD

TITLE: SHOALHAVEN WATER
ST ANNS PUMPING STATION UPGRADE
ELECTRICAL SERVICES
SCA CABLE ZONE D0
INTERCONNECTION DIAGRAM (1 OF 4)

SIZE	SCALE	INDEX No.	DRAWING No.	SHEET	REV No.
A1	N.T.S.		23-142664	502.1	0

Plot Date 15/04/21 - 19:35 Cad File C:\CAD\temp\AcPublish_63092\23-142664-502-1dwg

FROM DRAWING 502.1

| | | |

FROM DRAWING 0602585-502.2

04C.1 b	04C.1	04C	B/W
0400 b	0400	0400	B/R
04C.2 b	04C.2	04C	B/W
0401 b	0401	0401	B/R
04C.3 b	04C.3	0402	B/R
0402 b	0402		
04C.4 b	04C.4	0403	B/R
0403 b	0403		
04C.5 b	04C.5	0404	B/R
0404 b	0404		
04C.6 b	04C.6	04C	B/W
0405 b	0405	0405	B/R
04C.7 b	04C.7	0406	B/R
0406 b	0406		
04C.8 b	04C.8	04C	B/W
0407 b	0407	0407	B/R
04C.9 b	04C.9	0408	B/R
0408 b	0408		
04C.10 b	04C.10	0409	B/R
0409 b	0409		
04C.11 b	04C.11	0410	B/R
0410 b	0410		
04C.12 b	04C.12	0411	B/R
0411 b	0411		
04C.13 b	04C.13	0412	B/R
0412 b	0412		
04C.14 b	04C.14	0413	B/R
0413 b	0413		
X4-5 b	11	X4-5	Pu
X4-6 b	12	X4-6	Pu

CONTINUED DRAWING 502.4

NOTES:
"**" DENOTES WIRING BY CONTRACTOR

1. INTERCONNECTION DIAGRAMS 501, 502.1, 502.3, 502.4, 503 AND 506 UPDATED FOR ONLY NEW ITEMS FOR ST ANNS SPS UPGRADE. INTERCONNECTION DETAILS FOR EQUIPMENT BASED ON WAE DRAWINGS FROM CONCORD WAY SPS AND ARE ASSUMED ACCURATE. DETAILS SHALL BE CHECKED, CONFIRMED AND UPDATED BY THE CONTRACTOR

2 CORES 1.5mm.sq	WIRES	TO SCA CABLE ZONE DO DB TERMINALS (See Dwg. -503)	B/W, B/R
4 CORES 1.5mm.sq	WIRES	TO TELEMETRY RTU (See Dwg. -506)	B/W, B/R, Pu, Pu
2 CORES 1.5mm.sq	WIRES	TO SCA CABLE ZONE DO (See Dwg. -503)	B/W, B/R
2 CORES 1.5mm.sq	WIRES	TO SCA CABLE ZONE GO (See Dwg. -503)	B/W, B/R

No.	REVISION DETAILS	DWN	DATE
0	ISSUED FOR TENDER	RK	16.04.21

CONSULTANT DETAILS:
GHD
57 Graham Street Nowra NSW 2541
T 61 2 4424 4900 F 61 2 4424 4999
E noamail@ghd.com W www.ghd.com
CONSULTANT REFERENCE No.

Shoalhaven Water
A Group of Shoalhaven City Council

DESIGNED: CP	DATE: 21.07.15	COMPANY: GHD	
DRAWN: CC	DATE: 21.07.15	COMPANY: GHD	
CHECKED: DB	DATE: 16.12.15	COMPANY: GHD	
APPROVED: CS	DATE: 16.04.21	COMPANY: GHD	

TITLE:
SHOALHAVEN WATER
ST ANNS PUMPING STATION UPGRADE
ELECTRICAL SERVICES
SCA CABLE ZONE D0
INTERCONNECTION DIAGRAM (3 OF 4)

SIZE	SCALE	INDEX No.	DRAWING No.	SHEET	REV No.
A1	N.T.S.		23-1426641	502.3	0

Plot Date: 15/04/21 - 19:36 Cad File: C:\CAD\temp\AcPublish_630924\23-1426641-502-3.dwg

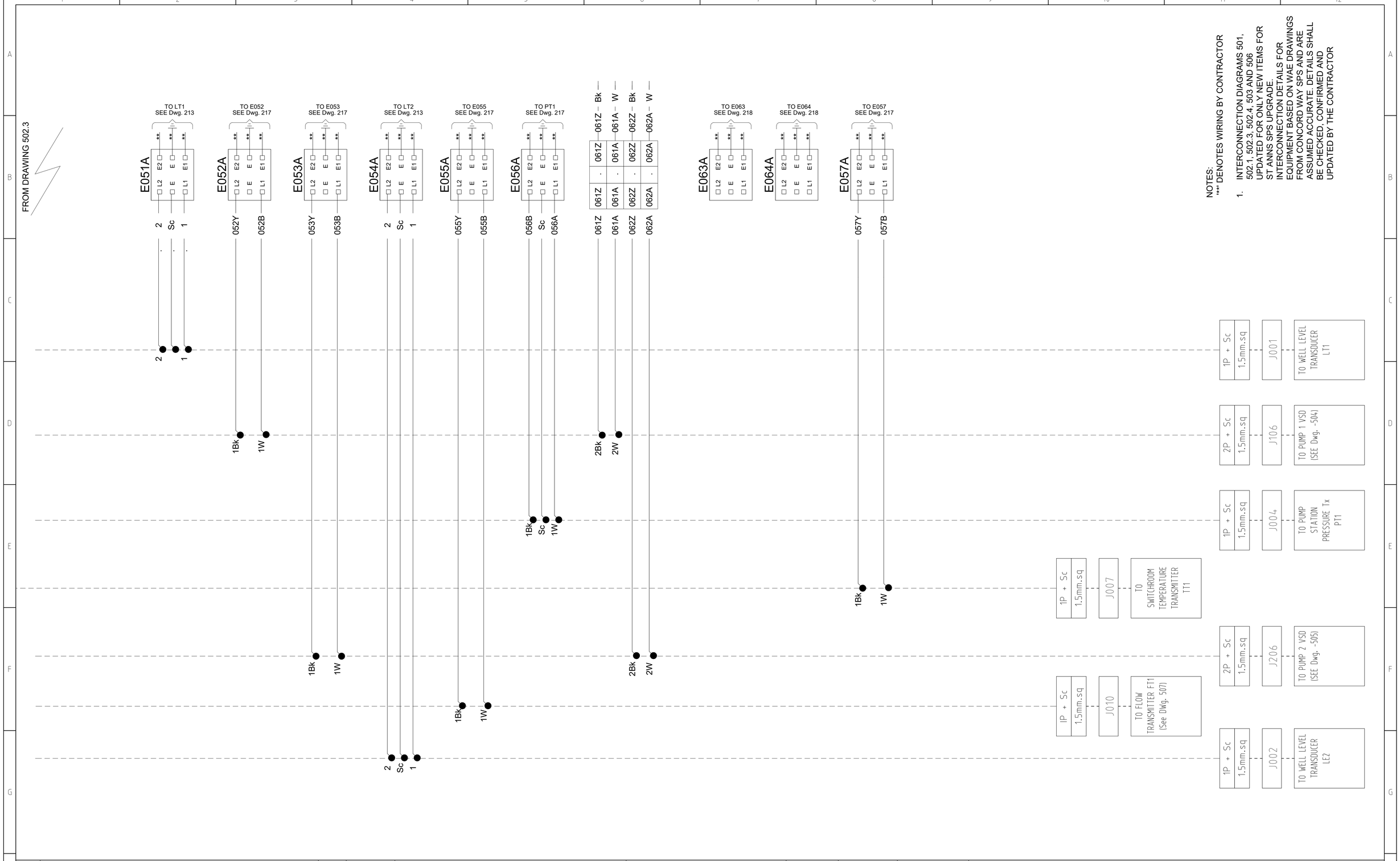

NOTES:
*** DENOTES WIRING BY CONTRACTOR

1. INTERCONNECTION DIAGRAMS 501, 502.1, 502.3, 502.4, 503 AND 506 UPDATED FOR ONLY NEW ITEMS FOR ST ANNS SPS UPGRADE. INTERCONNECTION DETAILS FOR EQUIPMENT BASED ON WAE DRAWINGS FROM CONCORD WAY SPS AND ARE ASSUMED ACCURATE. DETAILS SHALL BE CHECKED, CONFIRMED AND UPDATED BY THE CONTRACTOR

No.	REVISION DETAILS	DWN	DATE
0	ISSUED FOR TENDER	RK	16.04.21

CONSULTANT DETAILS:
GHD
57 Graham Street Nowra NSW 2541
T 61 2 4424 4900 F 61 2 4424 4999
E noamail@ghd.com W www.ghd.com

CONSULTANT REFERENCE No.

Shoalhaven Water
A Group of Shoalhaven City Council

DESIGNED: CP	DATE: 21.07.15	COMPANY: GHD	
DRAWN: CC	DATE: 21.07.15	COMPANY: GHD	
CHECKED: DB	DATE: 16.12.15	COMPANY: GHD	
APPROVED: CS	DATE: 16.04.21	COMPANY: GHD	

TITLE:
SHOALHAVEN WATER
ST ANNS PUMPING STATION UPGRADE
ELECTRICAL SERVICES
SCA CABLE ZONE D0
INTERCONNECTION DIAGRAM (4 OF 4)

SIZE:	SCALE:	INDEX No.	DRAWING No.	SHEET	REV No.
A1	N.T.S.		23-1426641	502.4	0

Plot Date: 15/04/21 - 19:36 Cad File: C:\CAD\temp\AcPublish_630924\23-1426641-502-4.dwg

NOTES:
"**" DENOTES WIRING BY CONTRACTOR

1. INTERCONNECTION DIAGRAMS 501, 502.1, 502.3, 502.4, 503 AND 506 UPDATED FOR ONLY NEW ITEMS FOR ST ANNS SPS UPGRADE.
INTERCONNECTION DETAILS FOR EQUIPMENT BASED ON WAE DRAWINGS FROM CONCORD WAY SPS AND ARE ASSUMED ACCURATE. DETAILS SHALL BE CHECKED, CONFIRMED AND UPDATED BY THE CONTRACTOR

6c+E 1.5mm.sq	C201	TO PUMP 2 VSD (See Dwg. -505)
1P + Sc 1.5mm.sq	J202	TO PUMP 2 NO FLOW LIMIT SWITCH CONNECT N/O
2 cores 1.5mm.sq	WIRES	TO SCA CABLE ZONE D0 (See Dwg. -502.3)
2P + Sc 1.5mm.sq	J205	TO PUMP 2 VSD (See Dwg. -505)
2 CORES 1.5mm.sq	WIRES	TO CABLE ZONE D0 (See Dwg. -502.2)
9 CORES 1.5mm.sq	WIRES	TO SCA CABLE ZONE D0 (See Dwg. -502.2)

PUMP STARTER No.2

| | | |

NOTES:

1 CONTROL CORES T1 TO T4 ARE INDICATIVE. FINAL NUMBER TO BE DETERMINED ONCE PUMP PROTECTION REQUIREMENTS ARE DEFINED.

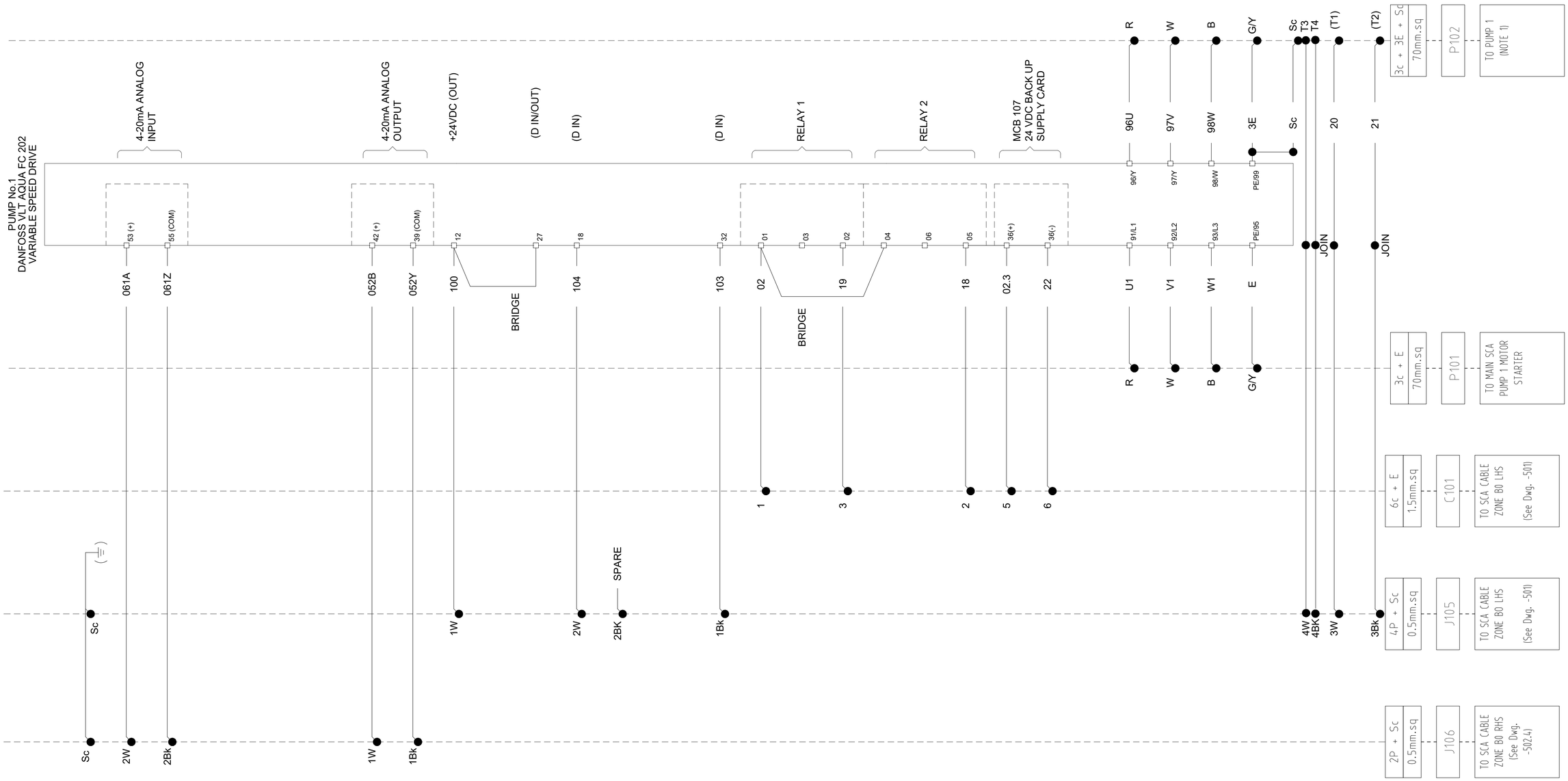

No.	REVISION DETAILS	DWN	DATE
0	ISSUED FOR TENDER	RK	16.04.21

CONSULTANT DETAILS:
GHD
57 Graham Street Nowra NSW 2541
T 61 2 4424 4900 F 61 2 4424 4999
E noamail@ghd.com W www.ghd.com
CONSULTANT REFERENCE No.

Shoalhaven Water
A Group of Shoalhaven City Council

DESIGNED: CP	DATE: 21.07.15	COMPANY: GHD	
DRAWN: CC	DATE: 21.07.15	COMPANY: GHD	
CHECKED: DB	DATE: 16.12.15	COMPANY: GHD	
APPROVED: CS	DATE: 16.04.21	COMPANY: GHD	

TITLE:
SHOALHAVEN WATER
ST ANNS PUMPING STATION UPGRADE
ELECTRICAL SERVICES
PUMP No. 1 VSD
INTERCONNECTION DIAGRAM

SIZE	SCALE	INDEX No.	DRAWING No.	SHEET	REV No.
A1	N.T.S.		23-1426641	504	0

Plot Date: 15/04/21 - 19:37 Cad File: C:\CAD\temp\AcPublish_630924\23-1426641-504.dwg

NOTES:

1 CONTROL CORES T1 TO T4 ARE INDICATIVE. FINAL NUMBER TO BE DETERMINED ONCE PUMP PROTECTION REQUIREMENTS ARE DEFINED.

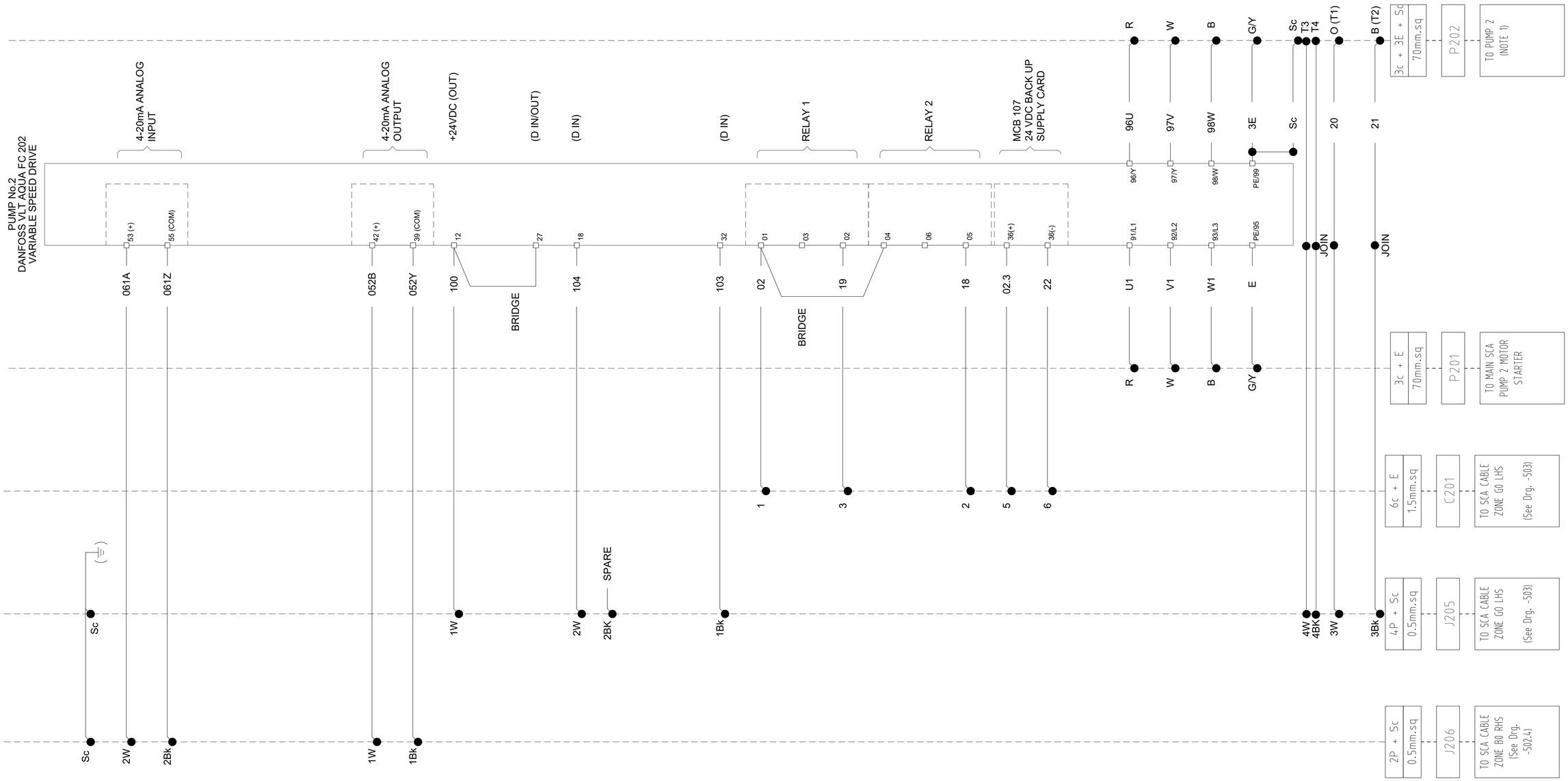

No.	REVISION DETAILS	DWN	DATE
0	ISSUED FOR TENDER	RK	16.04.21

CONSULTANT DETAILS:
GHD
57 Graham Street Nowra NSW 2541
T 61 2 4424 4900 F 61 2 4424 4999
E noamail@ghd.com W www.ghd.com
CONSULTANT REFERENCE No.

Shoalhaven Water
A Group of Shoalhaven City Council

DESIGNED: CP	DATE: 21.07.15	COMPANY: GHD	
DRAWN: CC	DATE: 21.07.15	COMPANY: GHD	
CHECKED: DB	DATE: 16.12.15	COMPANY: GHD	
APPROVED: CS	DATE: 16.04.21	COMPANY: GHD	

TITLE:
SHOALHAVEN WATER
ST ANNS PUMPING STATION UPGRADE
ELECTRICAL SERVICES
PUMP No. 2 VSD
INTERCONNECTION DIAGRAM

SIZE	SCALE	INDEX No.	DRAWING No.	SHEET	REV No.
A1	N.T.S.		23-1426641	505	0

Plot Date: 15/04/21 - 19:37 Cad File: C:\CAD\temp\AcPublish_630924\23-1426641-505.dwg

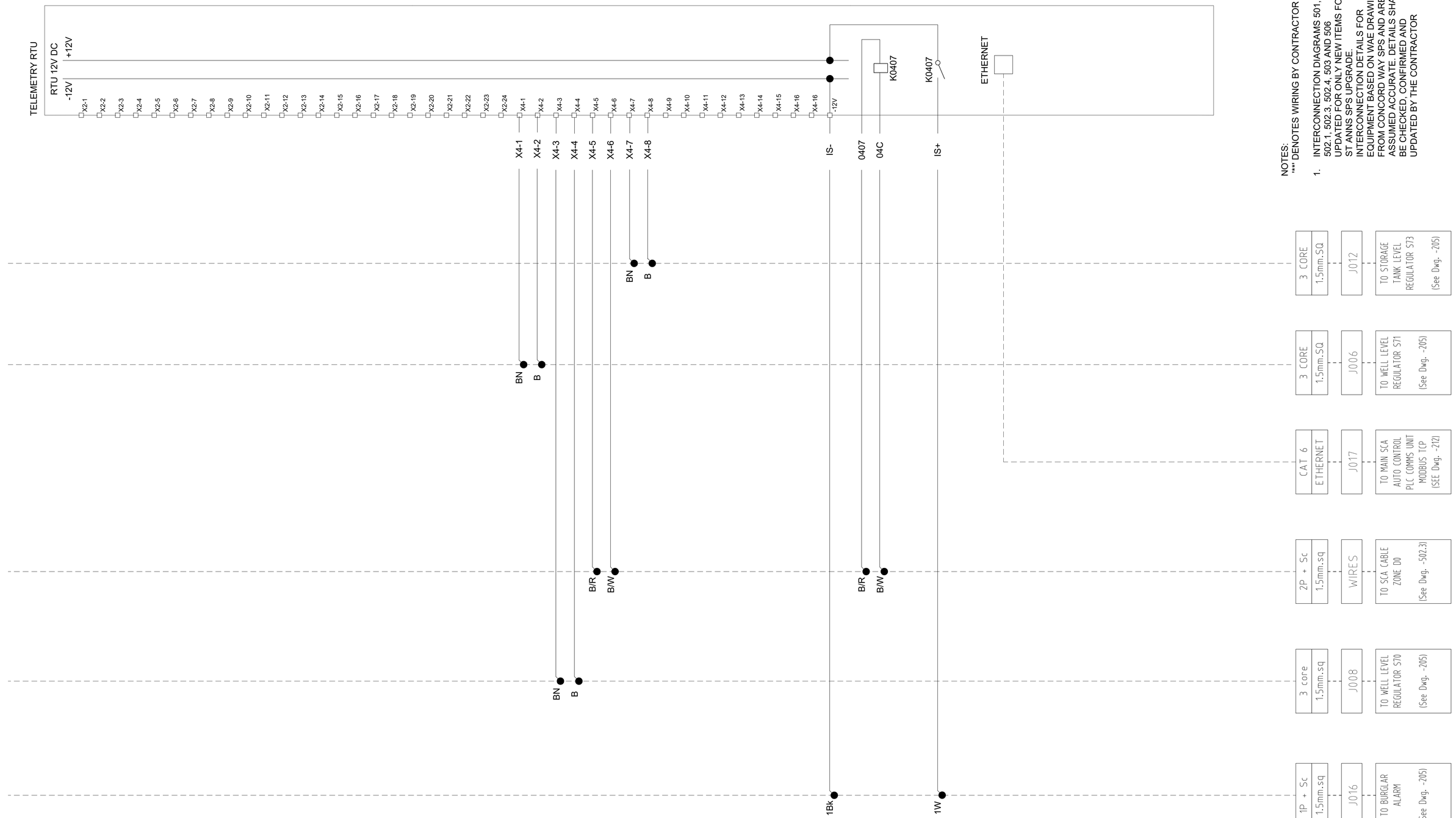

NOTES:
"*" DENOTES WIRING BY CONTRACTOR

1. INTERCONNECTION DIAGRAMS 501, 502.1, 502.3, 502.4, 503 AND 506 UPDATED FOR ONLY NEW ITEMS FOR ST ANNS SPS UPGRADE. INTERCONNECTION DETAILS FOR EQUIPMENT BASED ON WAE DRAWINGS FROM CONCORD WAY SPS AND ARE ASSUMED ACCURATE. DETAILS SHALL BE CHECKED, CONFIRMED AND UPDATED BY THE CONTRACTOR

No.	REVISION DETAILS	DWN	DATE
0	ISSUED FOR TENDER	RK	16.04.21

CONSULTANT DETAILS:
GHD
57 Graham Street Nowra NSW 2541
T 61 2 4424 4900 F 61 2 4424 4999
E noamail@ghd.com W www.ghd.com
CONSULTANT REFERENCE No.

Shoalhaven Water
A Group of Shoalhaven City Council

DESIGNED: CP	DATE: 21.07.15	COMPANY: GHD	
DRAWN: CC	DATE: 21.07.15	COMPANY: GHD	
CHECKED: DB	DATE: 16.12.15	COMPANY: GHD	
APPROVED: CS	DATE: 16.04.21	COMPANY: GHD	

TITLE:
SHOALHAVEN WATER
ST ANNS PUMPING STATION UPGRADE
ELECTRICAL SERVICES
TELEMETRY RTU
INTERCONNECTION DIAGRAM

SIZE	SCALE	INDEX No.	DRAWING No.	SHEET	REV No.
A1	N.T.S.		23-1426641	506	0

Plot Date: 15/04/21 - 19:37 Cad File: C:\CAD\temp\AcPublish_630924\23-1426641-506.dwg

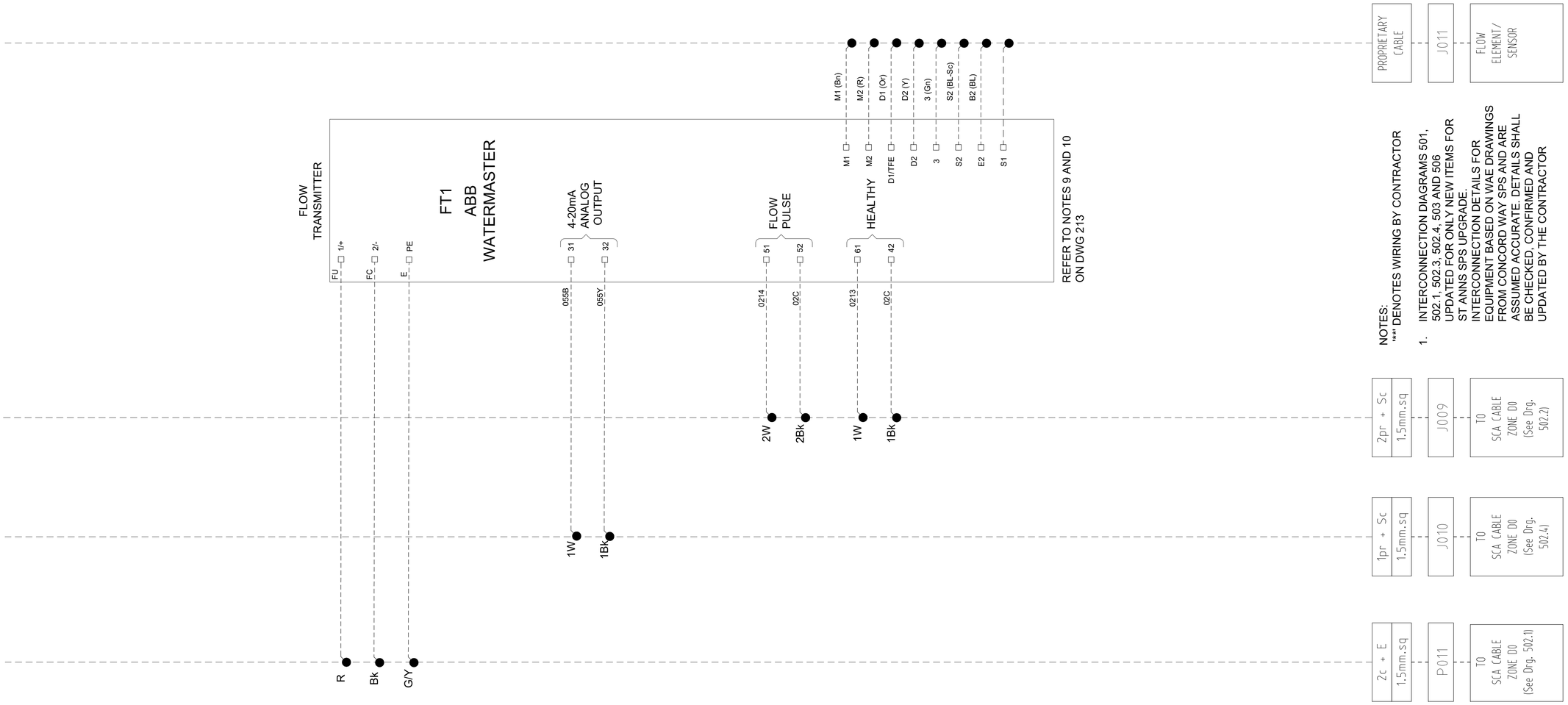

NOTES:
'**' DENOTES WIRING BY CONTRACTOR

1. INTERCONNECTION DIAGRAMS 501, 502.1, 502.3, 502.4, 503 AND 506 UPDATED FOR ONLY NEW ITEMS FOR ST ANNS SPS UPGRADE. INTERCONNECTION DETAILS FOR EQUIPMENT BASED ON WAE DRAWINGS FROM CONCORD WAY SPS AND ARE ASSUMED ACCURATE. DETAILS SHALL BE CHECKED, CONFIRMED AND UPDATED BY THE CONTRACTOR

No.	REVISION DETAILS	DWN	DATE
0	ISSUED FOR TENDER	RK	16.04.21

CONSULTANT DETAILS:
GHD
57 Graham Street Nowra NSW 2541
T 61 2 4424 4900 F 61 2 4424 4999
E noamail@ghd.com W www.ghd.com
CONSULTANT REFERENCE No.

Shoalhaven Water
A Group of Shoalhaven City Council

DESIGNED: CP	DATE: 21.07.15	COMPANY: GHD	
DRAWN: CC	DATE: 21.07.15	COMPANY: GHD	
CHECKED: DB	DATE: 16.12.15	COMPANY: GHD	
APPROVED: CS	DATE: 16.04.21	COMPANY: GHD	

TITLE:
SHOALHAVEN WATER
ST ANNS PUMPING STATION UPGRADE
ELECTRICAL SERVICES
FLOWMETER
INTERCONNECTION DIAGRAM

SIZE	SCALE	INDEX No.	DRAWING No.	SHEET	REV No.
A1	N.T.S.		23-1426641	507	0

Plot Date: 15/04/21 - 19:38 Cad File: C:\CAD\temp\AcPublish_630924\23-1426641-507.dwg

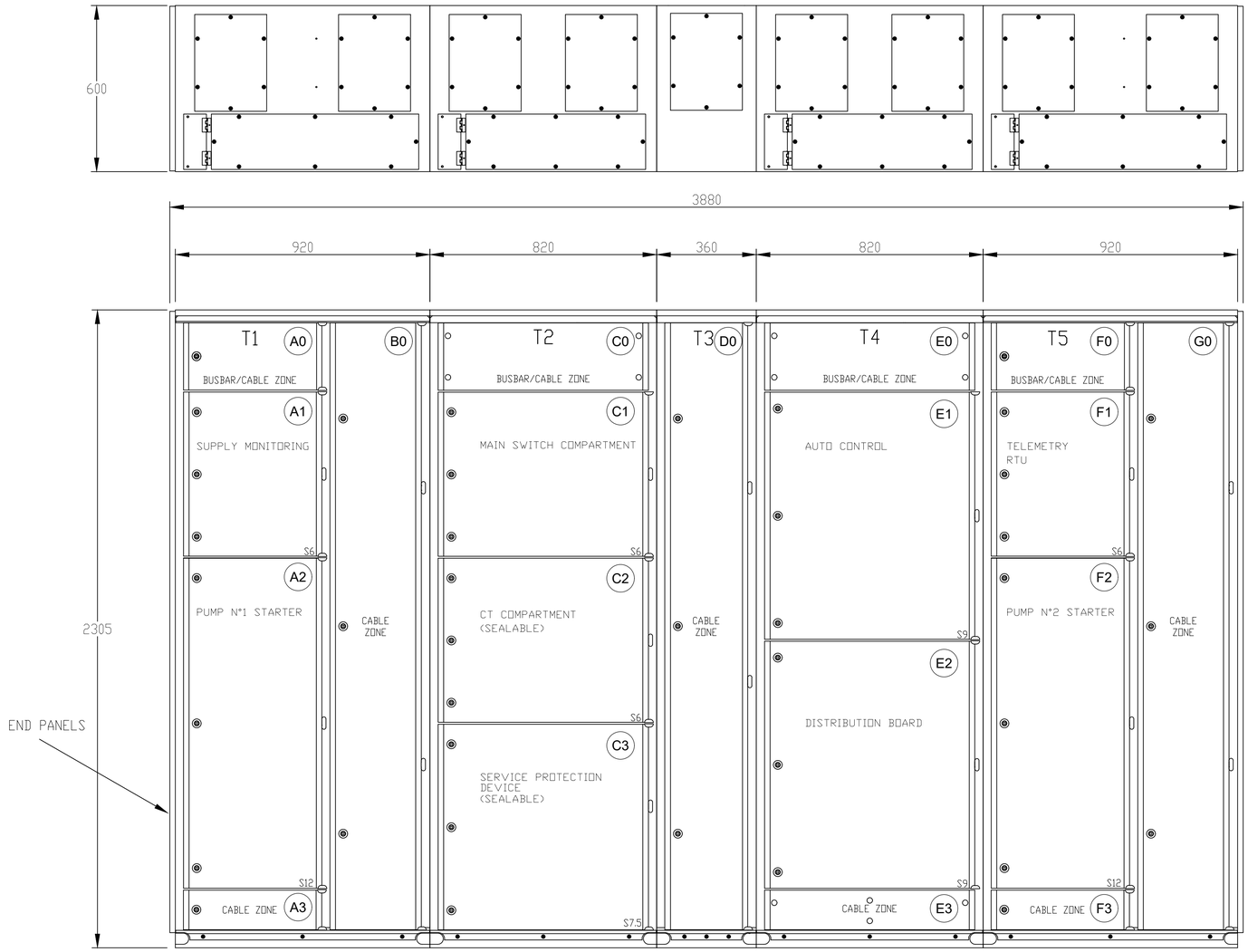

NOTES

1. THE SCA SHALL HAVE A DEGREE OF PROTECTION OF IP54.
2. SCA TO BE CONSTRUCTED FROM 2mm ZINCANNEAL STEEL. EXTERNAL COLOUR TO BE X15 ORANGE.
3. ALL COMPARTMENTS SHALL BE FITTED WITH DOORS. THE MAIN SWITCHES, MOTOR STARTER ISOLATOR, SUBMAIN CONTROL ETC SHALL BE INTERLOCKED WITH THE COMPARTMENT DOORS SUCH THAT THE DOORS CANNOT BE OPENED OR CLOSED UNLESS THE SWITCH IS IN THE "OFF" POSITION.
4. THE SCA SHALL BE CONSTRUCTED SUCH THAT IT CAN BE EASILY TRANSPORTED WITHOUT DAMAGE TO EQUIPMENT PANELS AND FINISH. PROVIDE LIFTING SUPPORTS AS REQUIRED FOR THE INSTALLATION OF THE SCA.
5. SCA PLINTH TO BE HEAVY DUTY GALVANISED
6. SPARE
7. SPARE
8. ALL CABLE ENTRIES SHALL BE VIA THE BOTTOM OF THE SCA THROUGH THE CABLE ZONES. SEWAGE PUMP CABLES MAY ENTRY DIRECTLY INTO THE PUMP STARTER COMPARTMENTS.
9. THE CABLE ZONES SHALL BE SIZED TO SUIT THE CABLES INDICATED ON THE DRAWINGS. ADEQUATE SPACE SHALL BE PROVIDED FOR SPARE COMPARTMENTS.
10. ANTI-CONDENSATION HEATERS SHALL BE INSTALLED IN EACH CABLE ZONE.
11. SCA GENERAL ARRANGEMENT TYPICAL ONLY. CONTRACTOR SHALL TAKE RESPONSIBILITY OF OVERALL DESIGN AND LAYOUT TO ENSURE PRINCIPAL'S REQUIREMENTS ARE MET.
12. SCA TO HAVE PROVISION FOR ADDITIONAL TIER FOR FUTURE PUMP STARTER. CONTRACTOR TO ENSURE SCA CAN BE MODIFIED IN-SITU TO ALLOW ADDITIONAL TIER ON EITHER LELT HAND OR RIGHT HAND SIDE.

FRONT VIEW

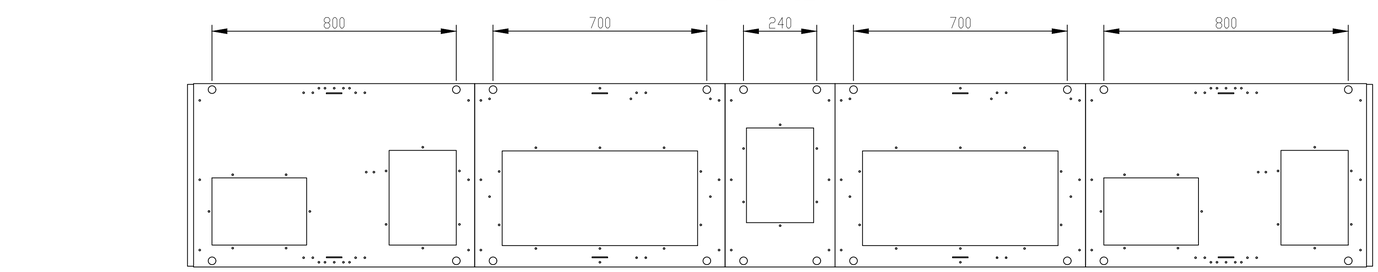

0 0.1 0.2 0.3 0.4 0.5m
SCALE 1:10 AT ORIGINAL SIZE

No.	REVISION DETAILS	DWN	DATE
0	ISSUED FOR TENDER	RK	16.04.21

CONSULTANT DETAILS:
GHD
57 Graham Street Nowra NSW 2541
T 61 2 4424 4900 F 61 2 4424 4999
E noamail@ghd.com W www.ghd.com

CONSULTANT REFERENCE No.

Shoalhaven Water
A Group of Shoalhaven City Council

DESIGNED: CP	DATE: 21.07.15	COMPANY: GHD	
DRAWN: CC	DATE: 21.07.15	COMPANY: GHD	
CHECKED: DB	DATE: 16.12.15	COMPANY: GHD	
APPROVED: CS	DATE: 16.04.21	COMPANY: GHD	

TITLE:
SHOALHAVEN WATER
ST ANNS PUMPING STATION UPGRADE
ELECTRICAL SERVICES
TYPICAL PUMPING STATION B3 SCA
GENERAL ARRANGEMENT

SIZE	SCALE	INDEX No.	DRAWING No.	SHEET	REV No.
A1	1:10m		23-1426641	601	0

NOTE

1 REFER TO NOTES 11 AND 12 ON DWG 601

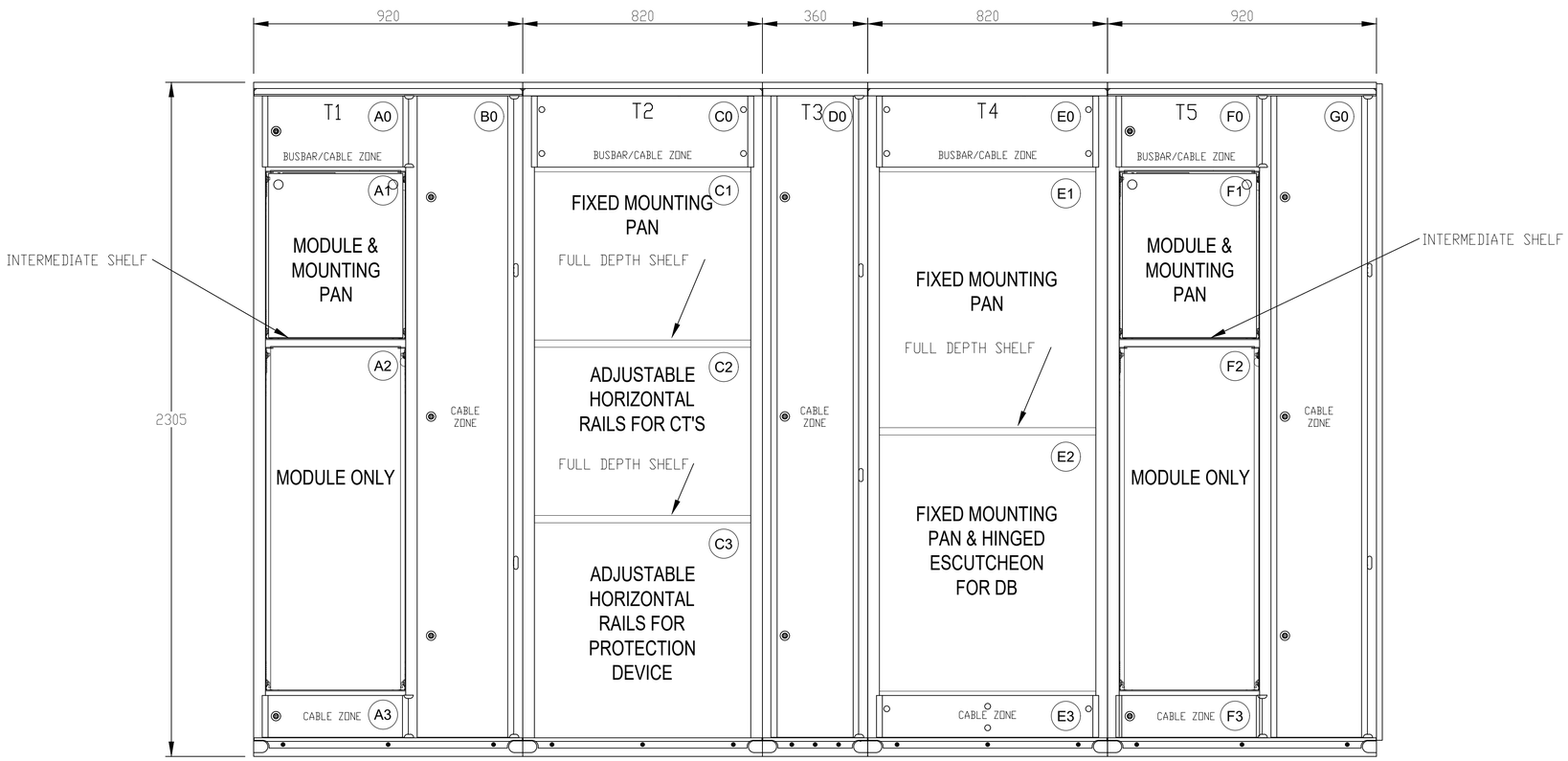

0 0.1 0.2 0.3 0.4 0.5m

SCALE 1:10 AT ORIGINAL SIZE

No.	REVISION DETAILS	DWN	DATE
0	ISSUED FOR TENDER	RK	16.04.21

CONSULTANT DETAILS:

GHD

57 Graham Street Nowra NSW 2541
T 61 2 4424 4900 F 61 2 4424 4999
E noamail@ghd.com W www.ghd.com

CONSULTANT REFERENCE No.

Shoalhaven Water
A Group of Shoalhaven City Council

DESIGNED: CP	DATE: 21.07.15	COMPANY: GHD	
DRAWN: CC	DATE: 21.07.15	COMPANY: GHD	
CHECKED: DB	DATE: 16.12.15	COMPANY: GHD	
APPROVED: CS	DATE: 16.04.21	COMPANY: GHD	

TITLE:
SHOALHAVEN WATER
ST ANNS PUMPING STATION UPGRADE
ELECTRICAL SERVICES
TYPICAL PUMPING STATION B3 SCA
GENERAL ARRANGEMENT - NO DOORS

SIZE	SCALE	INDEX No.	DRAWING No.	SHEET	REV No.
A1	1:10m		23-1426641	602	0

Plot Date: 15/04/21 - 19:38 Cad File: C:\CAD\temp\AcPublish_630924\23-1426641-602.dwg

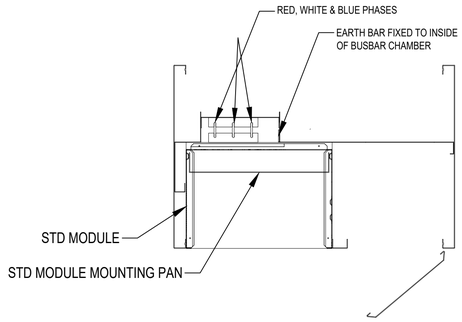

NOTE

1 REFER TO NOTES 11 AND 12 ON DWG 601

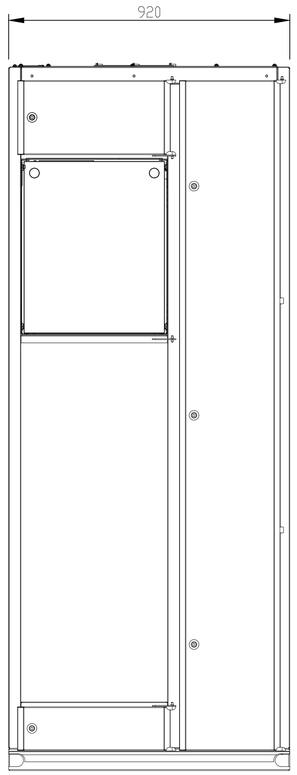

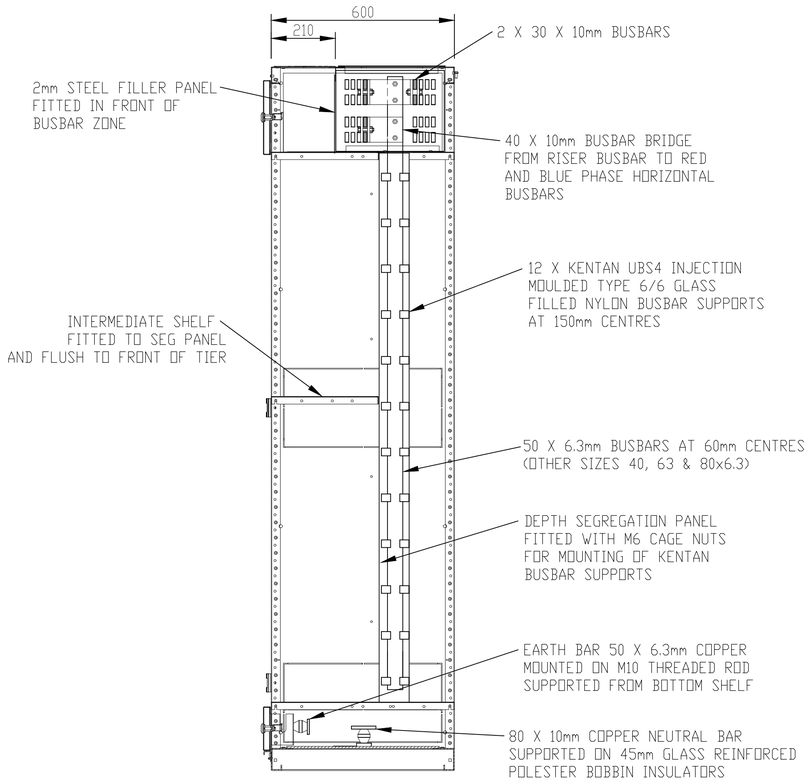

TYPICAL TIER 1 & T5

0 0.1 0.2 0.3 0.4 0.5m
SCALE 1:10 AT ORIGINAL SIZE

No.	REVISION DETAILS	DWN	DATE
0	ISSUED FOR TENDER	RK	16.04.21

CONSULTANT DETAILS:
GHD
57 Graham Street Nowra NSW 2541
T 61 2 4424 4900 F 61 2 4424 4999
E noamail@ghd.com W www.ghd.com
CONSULTANT REFERENCE No.

Shoalhaven Water
A Group of Shoalhaven City Council

DESIGNED: CP	DATE: 21.07.15	COMPANY: GHD	
DRAWN: CC	DATE: 21.07.15	COMPANY: GHD	
CHECKED: DB	DATE: 16.12.15	COMPANY: GHD	
APPROVED: CS	DATE: 16.04.21	COMPANY: GHD	

TITLE:
SHOALHAVEN WATER
ST ANNS PUMPING STATION UPGRADE
ELECTRICAL SERVICES
TYPICAL PUMPING STATION B3 SCA SECTIONS

SIZE	SCALE	INDEX No.	DRAWING No.	SHEET	REV No.
A1	1:10m		23-1426641	603	0

Plot Date: 15/04/21 - 19:39 Cad File: C:\CAD\temp\AcPublish_630924\23-1426641-603.dwg

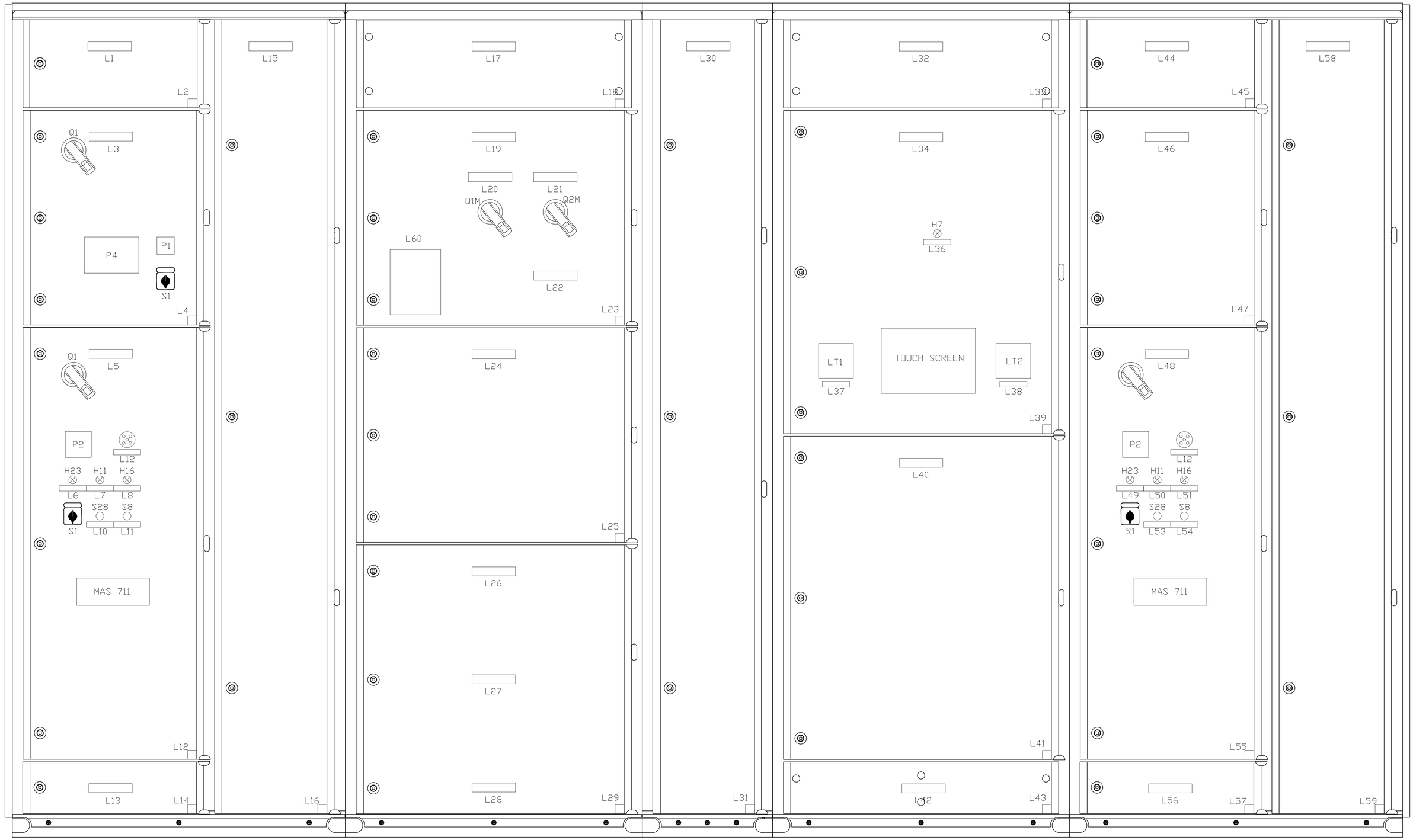

0 0.05 0.1 0.15 0.2 0.25m

SCALE 1:5 AT ORIGINAL SIZE

NOTE

1 REFER TO NOTES 11 AND 12 ON DWG 601

No.	REVISION DETAILS	DWN	DATE
0	ISSUED FOR TENDER	RK	16.04.21

CONSULTANT DETAILS:

GHD

57 Graham Street Nowra NSW 2541
T 61 2 4424 4900 F 61 2 4424 4999
E noamail@ghd.com W www.ghd.com

CONSULTANT REFERENCE No.

Shoalhaven Water
A Group of Shoalhaven City Council

DESIGNED: CP	DATE: 21.07.15	COMPANY: GHD	
DRAWN: CC	DATE: 21.07.15	COMPANY: GHD	
CHECKED: DB	DATE: 16.12.15	COMPANY: GHD	
APPROVED: CS	DATE: 16.04.21	COMPANY: GHD	

TITLE:
SHOALHAVEN WATER
ST ANNS PUMPING STATION UPGRADE
ELECTRICAL SERVICES
TYPICAL PUMPING STATION B3 SCA
EQUIPMENT LAYOUT - EXTERNAL

SIZE	SCALE	INDEX No.	DRAWING No.	SHEET	REV No.
A1	1:5m		23-1426641	604	0

Plot Date: 15/04/21 - 19:39 Cad File: C:\CAD\temp\AcPublish_630924\23-1426641-604.dwg

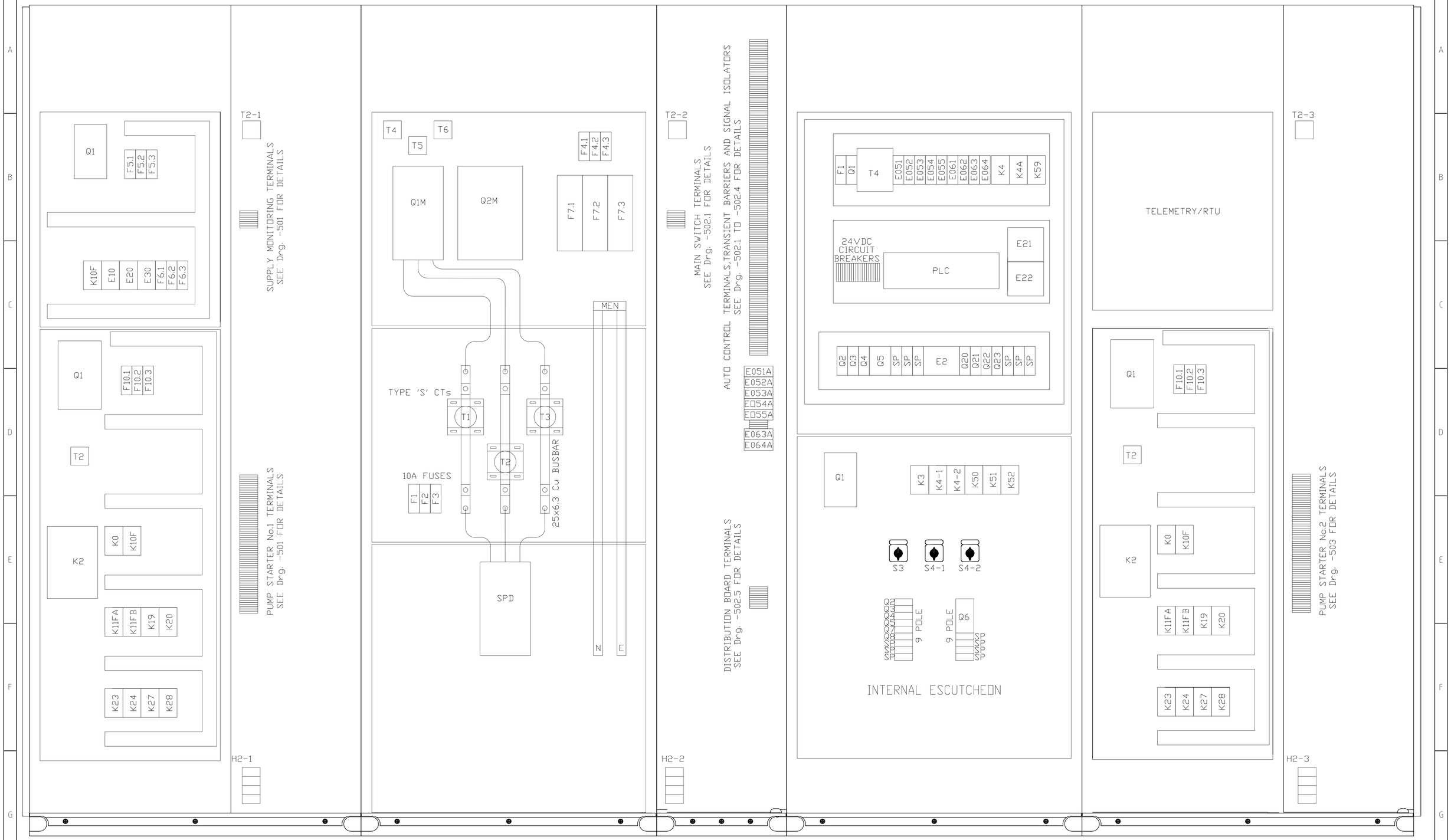

0 0.05 0.1 0.15 0.2 0.25m

SCALE 1:5 AT ORIGINAL SIZE

NOTES

1 REFER TO NOTES 11 AND 12 ON DWG 601

2 LAYOUT AND EQUIPMENT LOCATIONS ARE TYPICAL. THE CONTRACTOR SHALL BE RESPONSIBLE FOR FINAL EQUIPMENT SELECTION AND LAYOUT

No.	REVISION DETAILS	DWN	DATE
0	ISSUED FOR TENDER	RK	16.04.21

CONSULTANT DETAILS:

GHD

57 Graham Street Nowra NSW 2541
T 61 2 4424 4900 F 61 2 4424 4999
E noamail@ghd.com W www.ghd.com

CONSULTANT REFERENCE No.

Shoalhaven Water
A Group of Shoalhaven City Council

		DATE:	COMPANY:
DESIGNED:	CP	21.07.15	GHD
DRAWN:	CC	21.07.15	GHD
CHECKED:	DB	16.12.15	GHD
APPROVED:	CS	16.04.21	GHD

TITLE:
SHOALHAVEN WATER
ST ANNS PUMPING STATION UPGRADE
ELECTRICAL SERVICES
TYPICAL PUMPING STATION B3 SCA
EQUIPMENT LAYOUT - INTERNAL

SIZE	SCALE	INDEX No.	DRAWING No.	SHEET	REV No.
A1	1:5m		23-1426641	605	0

Plot Date: 15/04/21 - 19:39 Cad File: C:\CAD\temp\AcPublish_630924\23-1426641-605.dwg

ITEM No	EQUIPMENT DESCRIPTION	RATING	DESIGNATION	MAKE (NOTE3)	TYPE OR CATALOGUE No.	REMARKS	MOUNT (note1)	QTY	LABEL DETAILS NOTE 2	LABEL DETAILS
	SUPPLY MONITORING COMPARTMENT									
1	Circuit Breaker	20A	Q1	TERASAKI	S125NJ320		I	1	D	Q1
2	Circuit Breaker	6A	F5.1,F5.2,F5.3	TERASAKI	DTCB10106		I	3	D	F5.1,F5.2,F5.3
3	Transient Barrier	275V	E10,E20,E30	CRITEC	DSF6A-275		I	3	D	E10,E20,E30
4	Selector Switch	20A	S1	KRAUS & NAIMER	CA10 A292		D	1	D	S1
5	Fuse	1A	F6.1,F6.2,F6.3	IPD	SC01H		I	1	D	PHASE SEQUENCE CONTROL OFF ON
6	Phase Sequence Indicator	415V	P1	CROMPTON	243-12PG		D	1	D	P1
7	Phase Failure Relay	415V	K10F	CARLO GAVAZZI	DP1302CM48		I	1	D	K10F
8	Power Monitor		P4	SCHNEIDER	PM700P		D	1	D	P4
	PUMP 1 STARTER COMPARTMENT									
9	Circuit Breaker	250A	Q1	TERASAKI	S250PE3250		I	1	D	Q1
10	Circuit Breaker	6A	F10.1,F10.2,F10.3	TERASAKI	DTCB10106C		I	3	D	F10.1,F10.2,F10.3
11							I	1	D	F40
12							I	1	D	F20
13	Current Transformer	250/5	T2	IME	TAxxx		I	1	D	T2
14	Ammeter	250/5	P2	CROMPTON	243-xxx		D	1	D	P2
15	Contactor	132kW	K2	SPRECHER + SCHUH	CA6-xxx		I	1	D	K2
16	Pump Monitoring Relay		A4	FLYGT MAS711	A0501141		I	1	D	A4
17	Pump Monitoring Indicator		P4	FLYGT MAS711	A0501140		I	1	D	P4
18	Phase Failure Relay	415V	K10F	CARLO GAVAZZI	DP1302CM48		I	1	D	K10F
19							I	1	D	K6T
20							I	1	D	K15F
21	Auto Relay	24VDC	K0	FINDER	60.12		I	1	D	K0
22							I	1	D	T4
23							I	1	D	K23M
24	Relay	240VAC	K19	SPRECHER + SCHUH	CS4 - 40		I	1	D	K19
25							I	1	D	K16A
26	Relay	240VAC	K8, K11FA, K11FB, K16FA K20, K23, K24, K27, K28	SPRECHER + SCHUH	CS4 - 31		I	7	D	K8, K11FA, K11FB, K16FA K20, K23, K24, K27, K28
27	Pushbutton	10A	S8	MOELLER	M22 DS 40		D	1	D	S8
28	Pushbutton	10A	S28	MOELLER	M22 DB 30		D	1	D	S28
29	Indicating Light	240VAC	H11,H23	MOELLER	M22 LH R		D	3	D	H11,H23
30	Indicating Light	240VAC	H16	MOELLER	M22 LH Y		D	1	D	H16
31	Selector Switch	20A	S1	KRAUS & NAIMER	CA10		D	1	D A	S1 PUMP CONTROL ON S/DOWN OFF INST S/DOWN PLC
32	Fused Terminals	2A		WEIDMULLER	W SERIES		I		E	
	SERVICE PROTECTION DEVICE									
32A	Circuit Breaker	400A	SPD	TERASAKI	S400NE3400		I/D	1	D	SERVICE PROTECTION DEVICE

NOTES

1. EQUIPMENT MOUNTING:
   D-DOOR OR FRONT PANEL
   ES-ESCUTCHEON
   I-INTERNAL
   SL-SUPPLIED LOOSE

2. INSCRIPTION ON:
   A-ESCUTCHEON
   B-LENS
   C-PUSHBUTTON
   D-TRAFFOLYTE LABEL
   E-TERMINAL

3. EQUIPMENT MAY BE SIMILAR OR EQUAL TO THAT STATED. EQUIPMENT SHOWN IS TYPICAL AND MAY NOT REFLECT REQUIREMENTS AS DETAILED IN THE ELECTRICAL SCHEMATICS. THE CONTRACTOR SHALL BE RESPONSIBLE FOR FINAL EQUIPMENT SELECTION AND SIZE/RATING, ENSURING CIRCUIT DISCRIMINATION IS INLINE WITH AS 3000 REQUIREMENTS

4. ALL LABELS TO BE UPPER CASE LETTERS WITH HEIGHTS IN ACCORDANCE WITH MEW E101

5. ANTI-CONDENSATION HEATER REQUIRED WHEN SHOWN ON SINGLE LINE DIAGRAM

6. FAULT CURRENT LIMITING USING SUITABLE CIRCUIT BREAKER COMBINATIONS ACCEPTABLE.

No.	REVISION DETAILS	DWN	DATE
0	ISSUED FOR TENDER	RK	16.04.21

CONSULTANT DETAILS:
GHD
57 Graham Street Nowra NSW 2541
T 61 2 4424 4900 F 61 2 4424 4999
E noamail@ghd.com W www.ghd.com

CONSULTANT REFERENCE No.

Shoalhaven Water
A Group of Shoalhaven City Council

		DATE	COMPANY
DESIGNED:	CP	21.07.15	GHD
DRAWN:	CC	21.07.15	GHD
CHECKED:	DB	16.12.15	GHD
APPROVED:	CS	16.04.21	GHD

TITLE:
SHOALHAVEN WATER
ST ANNS PUMPING STATION UPGRADE
ELECTRICAL SERVICES
TYPICAL PUMPING STATION B3
EQUIPMENT SCHEDULE (1 OF 3)

SIZE	SCALE	INDEX No.	DRAWING No.	SHEET	REV No.
A1	N.T.S.		23-1426641	606.1	0

Plot Date: 15/04/21 - 19:40 Cad File: C:\CAD\temp\AcPublish_630924\23-1426641-606-1.dwg

ITEM No	EQUIPMENT DESCRIPTION	RATING	DESIGNATION	MAKE (NOTE3)	TYPE OR CATALOGUE No.	REMARKS	MOUNT (note1)	QTY	LABEL DETAILS NOTE 2	LABEL DETAILS
	CABLE ZONES									
33	Terminals			WEIDMULLER	W SERIES		I		E	See Drg. 0602585-500 SERIES
34	Thermostat	6A	T2-1,T2-2,T2-3	STEGO	KT001140		I	3	D	T2-1,T2-2,T2-3
35	Anti - Condensation Heaters	60W	H2-1,H2-2,H2-3	STEGO	HC-14005		I	3	D	H2-1,H2-2,H2-3
36	Transient Barriers	36V	E052A,E053A E063A,E064A	CRITEC	UTB-36		I	4	D	E052A,E053A E063A,E064A
37	Transient Barriers	36V	E051A,E054A	VEGA	B62-36G		I	2	D	E051A,E054A
38	Signal Isolators	4-20mA	E051 - 55 E061 - 64	OMNIFLEX	LPR		I	9	D	E051 - 55 E061 - 64
	MAIN SWITCH COMPARTMENT									
39	Main Switch - Normal Supply	400A	Q1M	TERASAKI	S400NE3400		I/D	1	D	Q1M
40	Main Switch - Generator Supply	400A	Q2M	TERASAKI	S400NJ4400		I/D	1	D	Q2M
41	Surge Diverter Fuse	63A	F4.1,F4.2,F4.3	IPD	ES63H	ES63 FUSE	I	3	D	F4.1,F4.2,F4.3
42	Surge Diverter	120kA	F7.1,F7.2,F7.3	NOVARIS	SD3-120		I	3	D	F7.1,F7.2,F7.3
43	Current Transformers	200/5	T4,T5,T6	IME	TA200		I	3	D	T4,T5,T6
	CT COMPARTMENT									
44	Supply Authority Metering Current Transformers	200/5	T1,T2,T3	ENERGY CONTROLS	TYPE 'S'		I	3	D	T1,T2,T3
45	Potential Fuses	20A	F1,F2,F3	IPD	SC20H	NS10 FUSE	I	3	D	F1,F2,F3
	AUTO CONTROL COMPARTMENT									
46	Circuit Breaker	20A	Q1	TERASAKI	DTCB6120C		I	1	D	Q1
47	Circuit Breaker	10A	Q2	TERASAKI	DTCB6110C		I	1	D	Q2
48	Circuit Breaker	6A	Q3,Q4,Q20,Q21,Q22,Q23	TERASAKI	DTCB6106C		I	6	D	Q3,Q4,Q20,Q21,Q22,Q23
49	Circuit Breaker	16A	Q5	TERASAKI	DTCB6116C		I	1	D	Q5
50	Fault Current Limiter Fuse	63A	F1	IPD	SC63H	ES63 FUSE	I	1	D	F1
51	Surge Filter	240VAC	E2	NOVARIS	SF110DIN		I	1	D	E2
52	Power Supply	10A	E21	OMRON	S8VS2402413		I	1	D	E21
53	PLC			OMRON	CJ2		I	1		
53A	Power Supply			OMRON	PA205R		I	1		
53B	CPU			OMRON CJ2	CPU33		I	1		
53C	Communication Module			OMRON	SCU21-V1		I	1		
53D	16pt Digital Input Module			OMRON	ID211		I	1		
53E	16pt Digital Output Module			OMRON	OC211		I	1		
53F	4pt Analog Input Module			OMRON	AD081-V1		I	1		
53G	4pt Analog Output Module			OMRON	DA041		I	1		
54	Touch Screen			OMRON	NB10		D	1		
55	Level Transmitter		LT1,LT2	VEGA	VEGAMET391		D	1	D	LT1
56	Fused Terminals	2A		WEIDMULLER	W SERIES		I		E	
57	Relay	24VAC	K4,K4A	FINDER	60.12		I	2	D	K4,K4A
58	Relay	24VDC	K59	FINDER	60.12		I	1	D	K59
59	Transformer	24VAC	T4	SCHNEIDER	ABL6TS04B		I	1	D	T4
60	Temperature Transmitter	24VAC	TT1				I	1	D	TT1
61	Indicating Light	240VDC	H7	MOELLER	M22 LH R		D	1	D	H7

NOTE

REFER NOTES 1 TO 6 ON DWG 606.1

No.	REVISION DETAILS	DWN	DATE
0	ISSUED FOR TENDER	RK	16.04.21

CONSULTANT DETAILS:
GHD
57 Graham Street Nowra NSW 2541
T 61 2 4424 4900 F 61 2 4424 4999
E noamail@ghd.com W www.ghd.com

CONSULTANT REFERENCE No.

Shoalhaven Water
A Group of Shoalhaven City Council

		DATE	COMPANY
DESIGNED:	CP	21.07.15	GHD
DRAWN:	CC	21.07.15	GHD
CHECKED:	DB	16.12.15	GHD
APPROVED:	CS	16.04.21	GHD

TITLE:
SHOALHAVEN WATER
ST ANNS PUMPING STATION UPGRADE
ELECTRICAL SERVICES
TYPICAL PUMPING STATION B3
EQUIPMENT SCHEDULE (2 OF 3)

SIZE	SCALE	INDEX No.	DRAWING No.	SHEET	REV No.
A1	N.T.S.		23-1426641	606.2	0

Plot Date: 15/04/21 - 19:40 Cad File: C:\CAD\temp\AcPublish_630924\23-1426641-606-2.dwg

ITEM No	EQUIPMENT DESCRIPTION	RATING	DESIGNATION	MAKE (NOTE3)	TYPE OR CATALOGUE No.	REMARKS	MOUNT (note1)	QTY	LABEL DETAILS NOTE 2	LABEL DETAILS
	DISTRIBUTION BOARD COMPARTMENT									
62	Circuit Breaker	50A	Q1	TERASAKI	S125NJ350		ES	1		
63	Circuit Breaker	10A	Q2,Q3,Q4	TERASAKI	DSRCBH1030A		ES	3		
64	Circuit Breaker	16A	Q5,Q8	TERASAKI	DSRCBH1630A		ES	3		
65	Circuit Breaker	20A	Q6	TERASAKI	DTCB10320C + DSRCM-32-30-3PN		ES	1		
66	Selector Switch	20A	S3	KRAUS & NAIMER	CA10 A210		ES	1	D	S3
67	Circuit Breaker	20A	Q7	TERASAKI	DTCB10120C		ES	1	A	VENTILATION FAN ON OFF PLC
68	Selector Switch	20A	S4 - 1	KRAUS & NAIMER	CA10 A210		ES	1	D A	S4-1 AREA LIGHTING ON OFF PLC
69	Selector Switch	20A	S4 - 2	KRAUS & NAIMER	CA10 A210		ES	1	D A	S4-2 MAINTENANCE LIGHTING ON OFF PLC
70	Relay	24VDC	K50,K51,K52	FINDER	60.12		I	3	D	K50,K51,K52
71	Contactor	16A	K3,K4-1,K4-2	SPRECHER + SCHUH	CA7-16		I	3	D	K3,K4-1,K4-2
	PUMP 2 STARTER COMPARTMENT									
72	Circuit Breaker	250A	Q1	TERASAKI	S250PE3250		I	1	D	Q1
73	Circuit Breaker	6A	F10.1,F10.2,F10.3	TERASAKI	DTCB10106C		I	3	D	F10.1,F10.2,F10.3
74							I	1	D	F40
75							I	1	D	F20
76	Current Transformer	200/5	T2	IME	TA100		I	1	D	T2
77	Ammeter	200/5	P2	CROMPTON	243-026G		D	1	D	P2
78	Contactor	132kW	K2	SPRECHER + SCHUH	CA6-xxx		I	1	D	K2
79	Pump Monitoring Relay		A4	FLYGT MAS 711	40501141		I	1	D	A4
80	Pump Monitoring Indicator		P4	FLYGT MAS 711	40501140		D	1	D	P4
81	Phase Failure Relay	415V	K10F	CARLO GAVAZZI	DP1302CM48		I	1	D	K10F
82							I	1	D	K6T
83							I	1	D	K15F
84	Auto Relay	24VDC	K0	FINDER	60.12		I	1	D	K0
85							I	1	D	T4
86							I	1	D	K23M
87	Relay	240VAC	K19	SPRECHER + SCHUH	CS4 - 40		I	1	D	K19
88	Relay	240VAC	K16A	SPRECHER + SCHUH	CS4 - 22		I	1	D	K16A
89	Relay	240VAC	K8, K11FA, K16FA, K20 K23, K24, K27, K28	SPRECHER + SCHUH	CS4 - 31		I	7	D	K8, K11FA, K15FA, K20 K23A, K24, K27
90	Pushbutton	10A	S8	MOELLER	M22 DS 40		D	1	D	S8
91	Pushbutton	10A	S28	MOELLER	M22 DB 30		D	1	D	S28
92	Indicating Light	240VAC	H11,H23	MOELLER	M22 LH R		D	3	D	H11,H15,H23
93	Indicating Light	240VAC	H16	MOELLER	M22 LH Y		D	1	D	H16
94	Selector Switch	20A	S1	KRAUS & NAIMER	CA10		D	1	D A	S1 PUMP CONTROL ON S/DOWN OFF INST S/DOWN PLC
95	Fused Terminals	2A		WEIDMULLER	W SERIES		I		E	E

NOTE

REFER NOTES 1 TO 6 ON DWG 606.1

No.	REVISION DETAILS	DWN	DATE
0	ISSUED FOR TENDER	RK	16.04.21

CONSULTANT DETAILS:
GHD
57 Graham Street Nowra NSW 2541
T 61 2 4424 4900 F 61 2 4424 4999
E noamail@ghd.com W www.ghd.com

CONSULTANT REFERENCE No.

Shoalhaven Water
A Group of Shoalhaven City Council

DESIGNED: CP	DATE: 21.07.15	COMPANY: GHD	
DRAWN: CC	DATE: 21.07.15	COMPANY: GHD	
CHECKED: DB	DATE: 16.12.15	COMPANY: GHD	
APPROVED: CS	DATE: 16.04.21	COMPANY: GHD	

TITLE:
SHOALHAVEN WATER
ST ANNS PUMPING STATION UPGRADE
ELECTRICAL SERVICES
TYPICAL PUMPING STATION B3
EQUIPMENT SCHEDULE (3 OF 3)

SIZE	SCALE	INDEX No.	DRAWING No.	SHEET	REV No.
A1	N.T.S.		23-1426641	606.3	0

Plot Date: 15/04/21 - 19:41 Cad File: C:\CAD\temp\AcPublish_630924\23-1426641-606-3.dwg

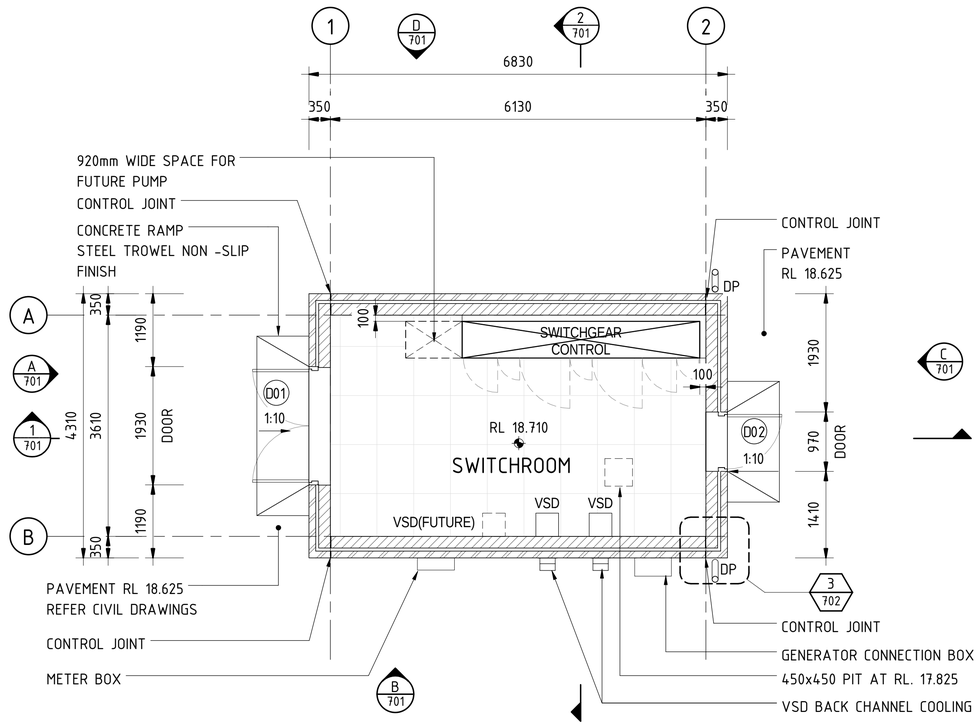

GROUND FLOOR PLAN
SCALE 1 : 50

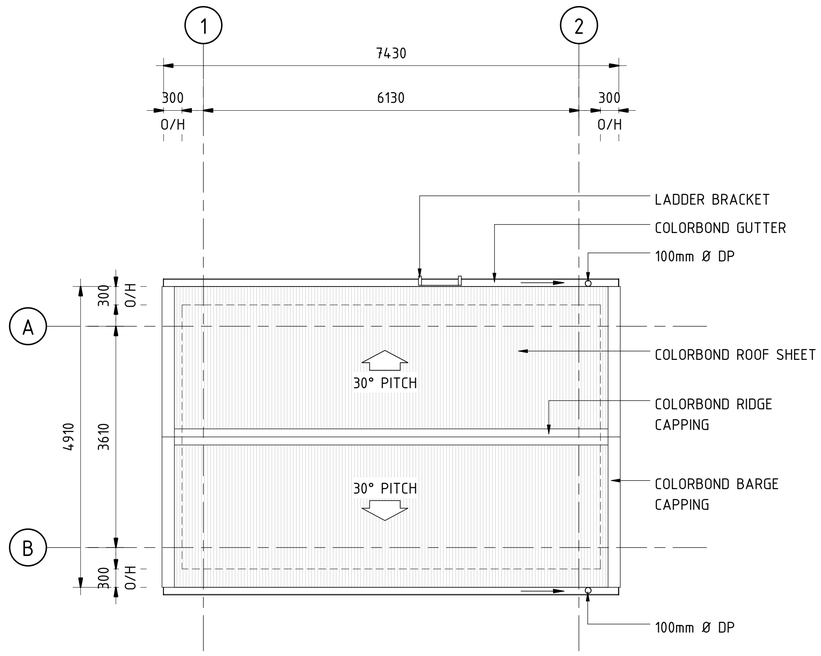

ROOF PLAN
SCALE 1 : 50

0 500 1000 1500 2000 2500 mm
SCALE 1:50 AT ORIGINAL SIZE

PRELIMINARY ISSUE
NOT FOR CONSTRUCTION

No.	REVISION DETAILS	DWN	CKD	APP	DATE
A	PRELIMINARY FOR REVIEW	AA	MS	CS	29/07/2016

CONSULTANT DETAILS:
GHD
57 Graham Street Nowra NSW 2541 Australia
T 61 2 4424 4900 F 61 2 4424 4999
E noamail@ghd.com W www.ghd.com
Conditions of Use.
This document may only be used by GHD's client (and any other person who GHD has agreed can use this document) for the purpose for which it was prepared and must not be used by any other person or for any other purpose.
CONSULTANT REFERENCE No.
23-1426641-04-700

Shoalhaven Water
A Group of Shoalhaven City Council

DESIGNED: L. DIAZ	DATE: 18/07/2016	COMPANY: GHD	TITLE: SHOALHAVEN WATER
DRAWN: A. ARIMADO	DATE: 18/07/2016	COMPANY: GHD	ST ANNS PUMPING STATION UPGRADE
CHECKED:	DATE:	COMPANY:	SWITCHROOM BUILDING
APPROVED:	DATE:	COMPANY:	FLOOR PLAN AND ROOF PLAN

SIZE	SCALE	INDEX No.	DRAWING No.	SHEET	REV No.
A1	AS SHOWN		23-1426641-04	700	A

Plot Date: 3/08/2016 3:38:42 PM
Cad File No: C:\Users\acarimado\Documents\Revit 2016 Local Files\23142664104_ST ANNS SWITCHROOM_acarimado.rvt

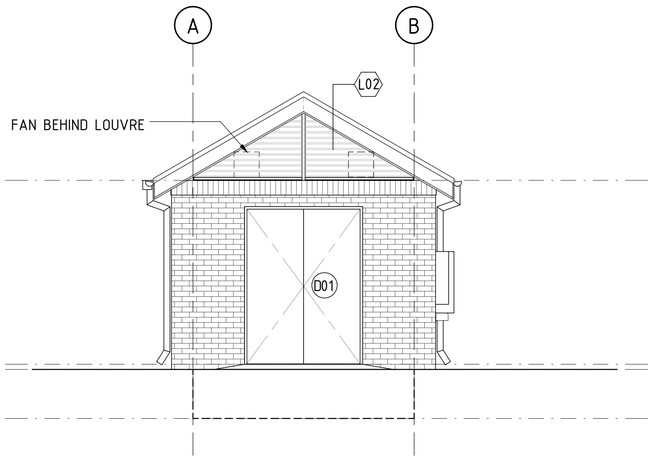

A 700 ELEVATION
SCALE 1 : 50

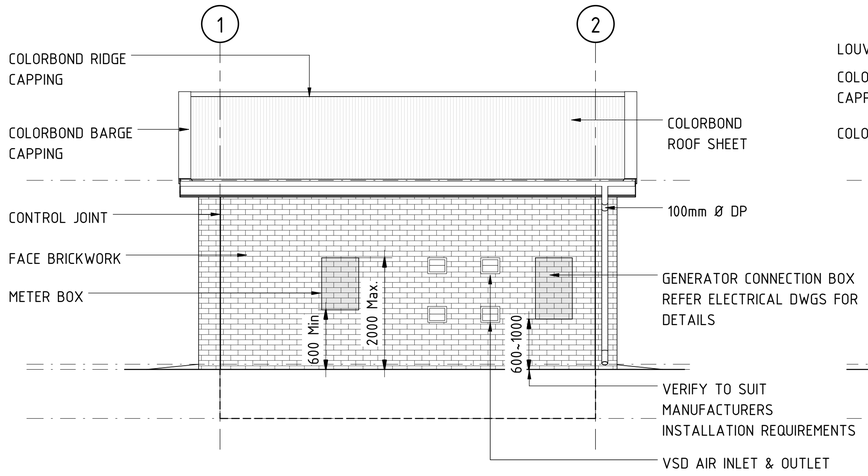

B 700 ELEVATION
SCALE 1 : 50

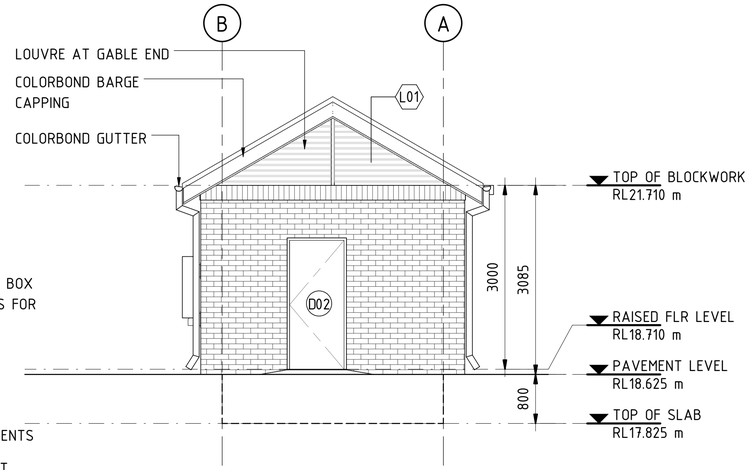

C 700 ELEVATION
SCALE 1 : 50

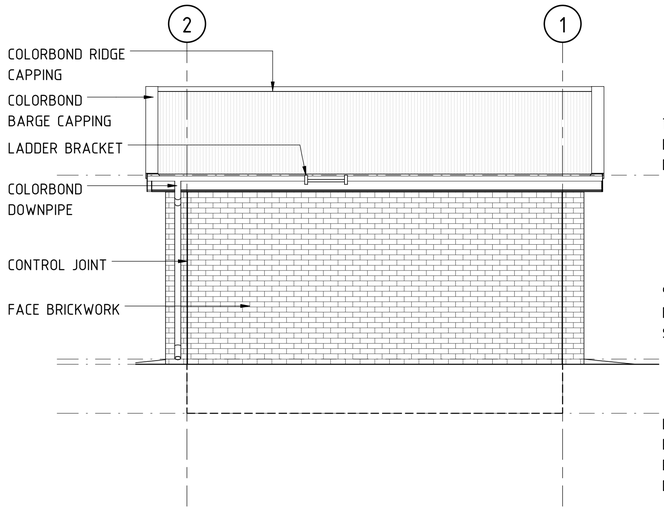

D 700 ELEVATION
SCALE 1 : 50

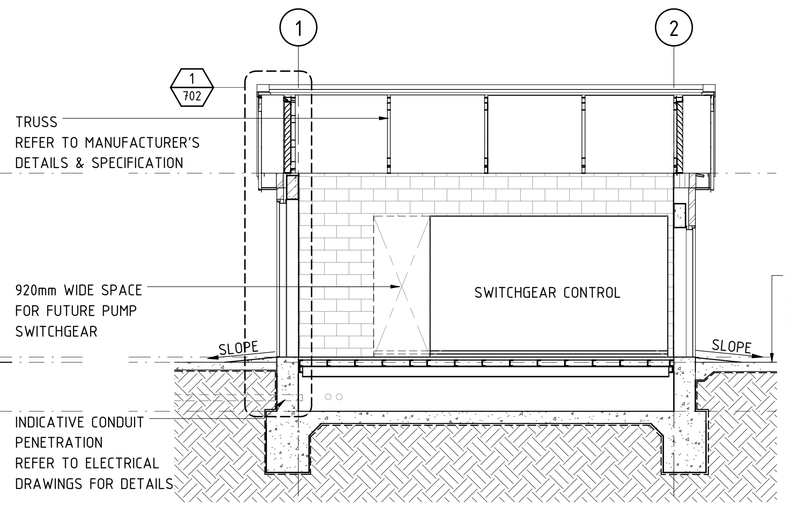

1 700 SECTION
SCALE 1 : 50

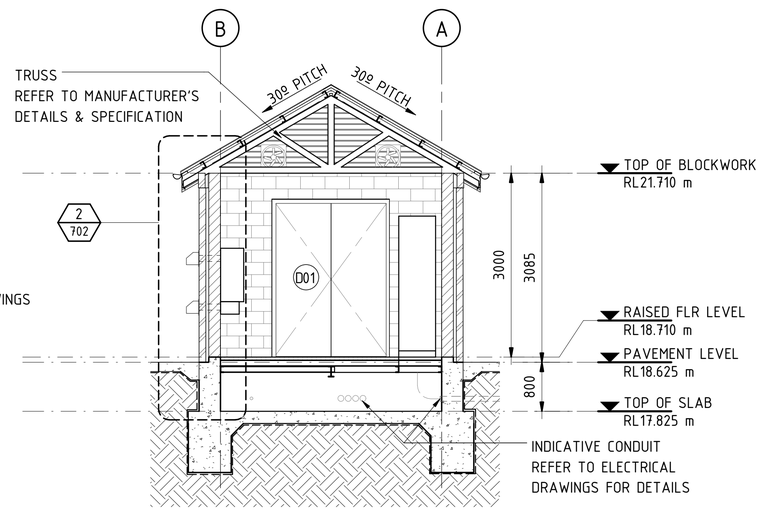

2 700 SECTION
SCALE 1 : 50

0 500 1000 1500 2000 2500 mm
SCALE 1:50 AT ORIGINAL SIZE

PRELIMINARY ISSUE
NOT FOR CONSTRUCTION

No.	REVISION DETAILS	DWN	CKD	APP	DATE
A	PRELIMINARY FOR REVIEW	AA	MS	CS	29/07/2016

CONSULTANT DETAILS:
GHD
57 Graham Street Nowra NSW 2541 Australia
T 61 2 4424 4900 F 61 2 4424 4999
E noamail@ghd.com W www.ghd.com

Conditions of Use.
This document may only be used by GHD's client (and any other person who GHD has agreed can use this document) for the purpose for which it was prepared and must not be used by any other person or for any other purpose.

CONSULTANT REFERENCE No. 23-1426641-04-701

Shoalhaven Water
A Group of Shoalhaven City Council

DESIGNED: L. DIAZ	DATE: 18/07/2016	COMPANY: GHD	TITLE: SHOALHAVEN WATER ST ANNS PUMPING STATION UPGRADE SWITCHROOM BUILDING ELEVATIONS AND SECTIONS
DRAWN: A. ARIMADO	DATE: 13/05/2016	COMPANY: GHD	
CHECKED:	DATE:	COMPANY:	
APPROVED:	DATE:	COMPANY:	SIZE: A1 / SCALE: AS SHOWN / INDEX No. / DRAWING No. 23-1426641-04 / SHEET 701 / REV No. A

Plot Date: 3/08/2016 3:38:47 PM
Cad File No: C:\Users\acarimado\Documents\Revit 2016 Local Files\23142664104_ST ANNS SWITCHROOM_acarimado.rvt

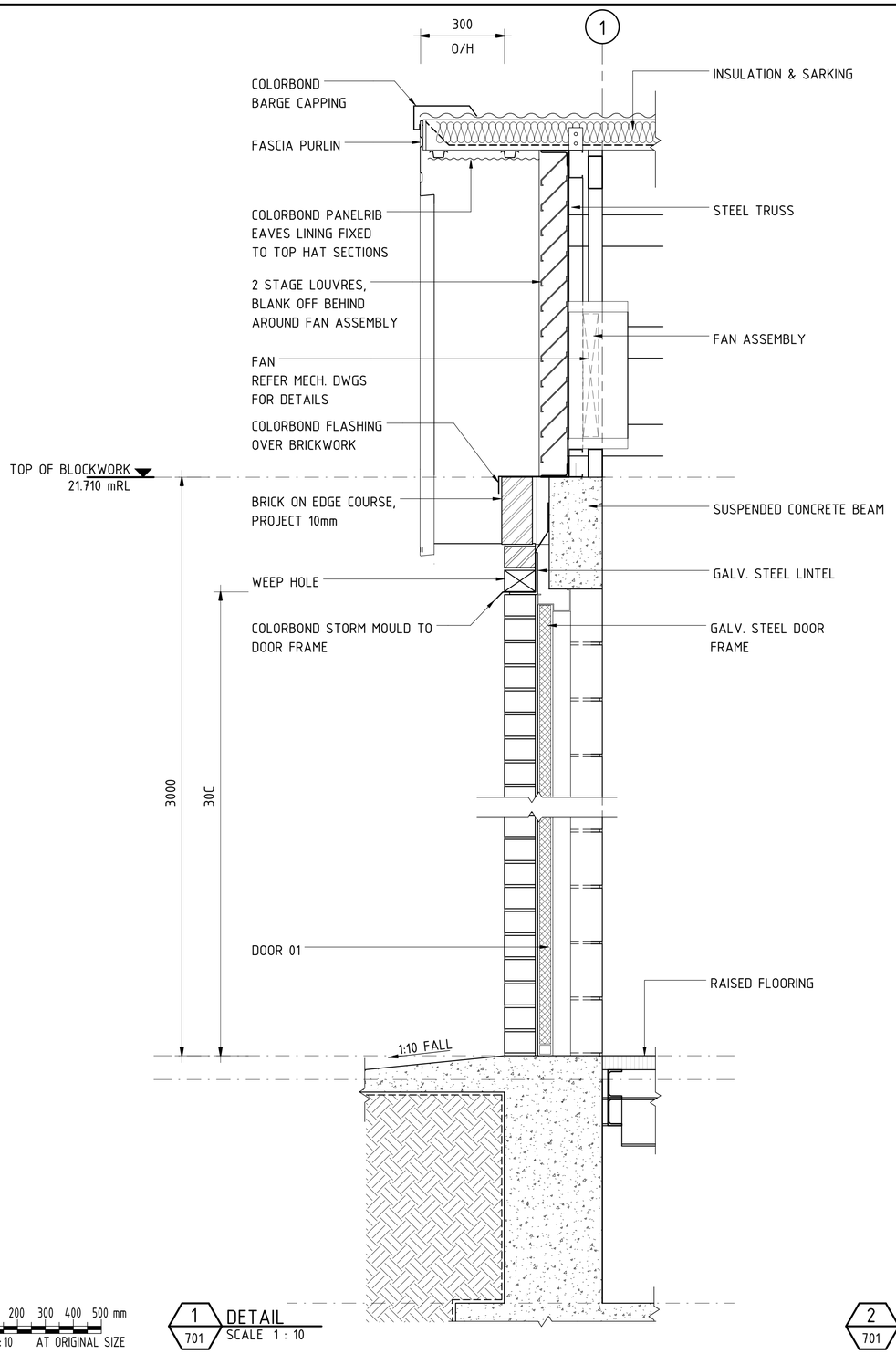

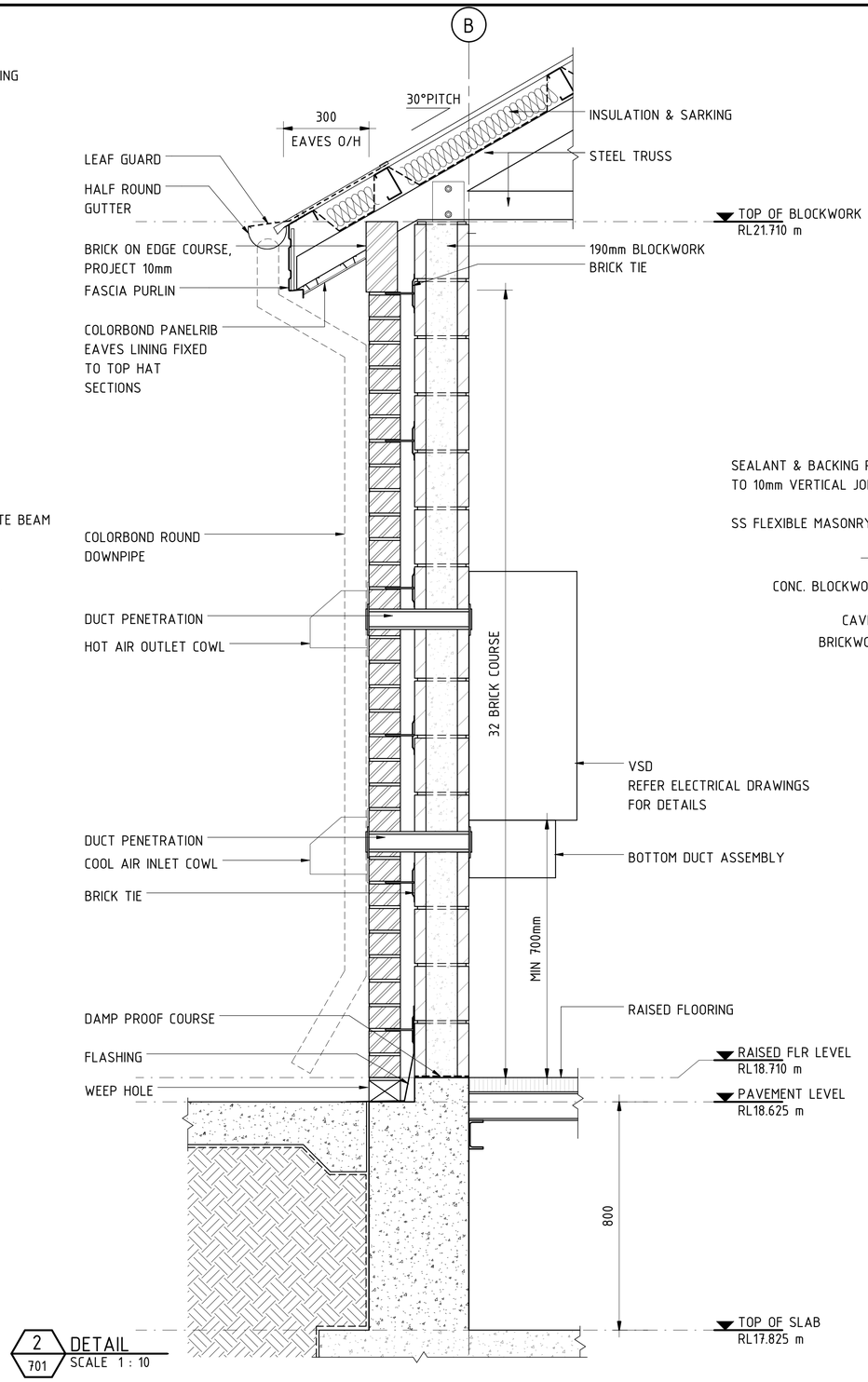

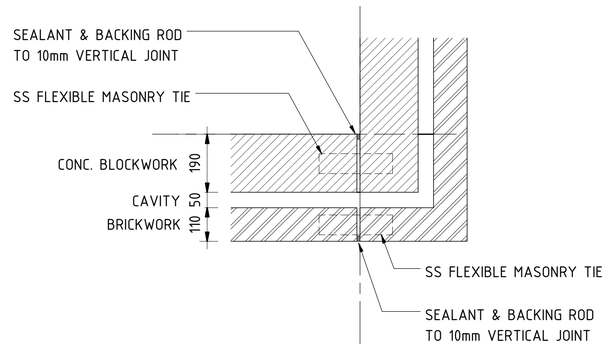

CONTROL JOINT TYPICAL DETAIL

3
700
DETAIL
SCALE 1 : 10

PRELIMINARY ISSUE
NOT FOR CONSTRUCTION

No.	REVISION DETAILS	DWN	CKD	APP	DATE
A	PRELIMINARY FOR REVIEW	AA	MS	CS	29/07/2016

CONSULTANT DETAILS:

GHD
57 Graham Street Nowra NSW 2541 Australia
T 61 2 4424 4900 F 61 2 4424 4999
E noamail@ghd.com W www.ghd.com

Conditions of Use.
This document may only be used by GHD's client (and any other person who GHD has agreed can use this document) for the purpose for which it was prepared and must not be used by any other person or for any other purpose.

CONSULTANT REFERENCE No.
23-1426641-04-702

Shoalhaven Water
A Group of Shoalhaven City Council

		DATE	COMPANY
DESIGNED:	L. DIAZ	18/07/2016	GHD
DRAWN:	A. ARIMADO	18/07/2016	GHD
CHECKED:		DATE:	COMPANY:
APPROVED:		DATE:	COMPANY:

TITLE:
SHOALHAVEN WATER
ST ANNS PUMPING STATION UPGRADE
SWITCHROOM BUILDING
SECTION DETAILS

SIZE:	SCALE:	INDEX No.	DRAWING No.	SHEET	REV No.
A1	AS SHOWN		23-1426641-04	702	A

Plot Date: 3/08/2016 3:38:48 PM
Cad File No: C:\Users\acarimado\Documents\Revit 2016 Local Files\23142664104_ST ANNS SWITCHROOM_acarimado.rvt

DOOR AND LOUVRE SCHEDULE

DIMENSION	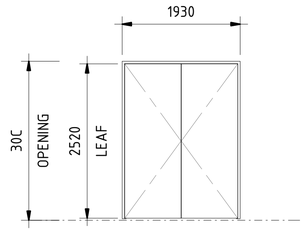	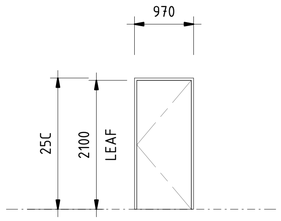	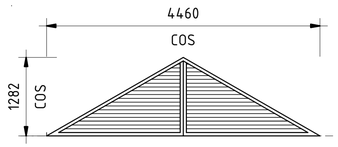
MARK	D01	D02	L01 & L02
TYPE	EXTERNAL DOUBLE LEAF PERSONNEL & EQUIPMENT DOOR	EXTERNAL SINGLE LEAF PERSONNEL DOOR	LOUVRE
FRAME	STEEL FRAME TO BE CONTINUOUSLY WELDED FROM METALLIC COATED STEEL SHEET SECTION, INCLUDING NECESSARY ACCESSORIES SUCH AS BUFFERS, STRIKE PLATES, SPREADERS, FIXING TIES OR BRACKETS, AND SUITABLE PROVISION FOR FIXING HARDWARE, AND PRE-FINISHED WITH PROTECTIVE COATING. FRAME FINISH BEFORE PAINT: GRIND WELDS SMOOTH, COLD GALVANIZE JOINTS AND SHOP PRIME FULL FRAME. BASE METAL THICKNESS: GREATER OR EQUAL TO 1.4mm. METALLIC COATED STEEL SHEET: TO AS1397. PAINT FINISH AS PER CLIENT STANDARD	STEEL FRAME TO BE CONTINUOUSLY WELDED FROM METALLIC COATED STEEL SHEET SECTION, INCLUDING NECESSARY ACCESSORIES SUCH AS BUFFERS, STRIKE PLATES, SPREADERS, FIXING TIES OR BRACKETS, AND SUITABLE PROVISION FOR FIXING HARDWARE, AND PRE-FINISHED WITH PROTECTIVE COATING. FRAME FINISH BEFORE PAINT: GRIND WELDS SMOOTH, COLD GALVANIZE JOINTS AND SHOP PRIME FULL FRAME. BASE METAL THICKNESS: GREATER OR EQUAL TO 1.4mm. METALLIC COATED STEEL SHEET: TO AS1397. PAINT FINISH AS PER CLIENT STANDARD.	STEEL FRAMED STORM PROOF TWO STAGE LOUVRES WITH POWDER COATED ALUMINIUM BLADES, ALL AS SPECIFIED. FIT WITH 25mm GALVANISED BIRD MESH TO REAR FACE AND G4 PLEATED FILTER.
DESCRIPTION	METAL LINED SOLID CORE, 40mm WITH WP PLY FACING AND COLORBOND STEEL CLADDING TO ALL FACES, INCL. STILES, TOP AND BOTTOM. EXIT MUST BE READILY OPENABLE WITHOUT A KEY FROM THE INSIDE (DIRECTION OF EGRESS OUT), LEVEL ACTION BY SINGLE HAND DOWNWARD ACTION OR PUSHING ON A SINGLE DEVICE, HEIGHT OF HANDLE LOCATED BETWEEN 900 TO 1200mm FROM FLOOR LEVEL. THE DOOR IS ABLE TO BE OPENED MANUALLY UNDER A FORCE OF NOT MORE THAN 110N.	METAL LINED SOLID CORE, 40mm WITH WP PLY FACING AND COLORBOND STEEL CLADDING TO ALL FACES, INCL. STILES, TOP AND BOTTOM. EXIT MUST BE READILY OPENABLE WITHOUT A KEY FROM THE INSIDE (DIRECTION OF EGRESS OUT), LEVEL ACTION BY SINGLE HAND DOWNWARD ACTION OR PUSHING ON A SINGLE DEVICE, HEIGHT OF HANDLE LOCATED BETWEEN 900 TO 1200mm FROM FLOOR LEVEL. THE DOOR IS ABLE TO BE OPENED MANUALLY UNDER A FORCE OF NOT MORE THAN 110N.	N/A
LOCKS, LATCHES, KEYING	REFER TO MANUFACTURERS SPECIFICATION.	REFER TO MANUFACTURERS SPECIFICATION.	N/A
FURNITURE	STAINLESS STEEL, SATIN FINISH, D LEVER HANDLES ON PLATE, COMPLIANT WITH AS1428.1_2009, INTEGRATED KEY CYLINDER. DELAYED ACTION HEAVY DUTY DOOR CLOSER WITH BACK CHECK OPERATION EQ. TO KABA 9026 SERIES.	STAINLESS STEEL, SATIN FINISH, D LEVER HANDLES ON PLATE, COMPLIANT WITH AS1428.1_2009, INTEGRATED KEY CYLINDER. DELAYED ACTION HEAVY DUTY DOOR CLOSER WITH BACK CHECK OPERATION EQ. TO KABA 9026 SERIES.	N/A
HINGES	3 OFF SS HEAVY DUTY BUTT HINGES 304 GRADE, 100x75.	3 OFF SS HEAVY DUTY BUTT HINGES 304 GRADE, 100x75.	N/A
SEAL	RAVEN PRODUCTS P/L ACOUSTIC DOOR SEALS -RP47 SI FRAME SEALS (JAMB & HEAD) RP99 SI BOTTOM SEAL FIXED TO INSIDE FACE OF DOORS TO FIT TIGHT TO FLOOR -ADD RP16 SI TO ACTIVE LEAF OF PAIR (EXTERNAL)	RAVEN PRODUCTS P/L ACOUSTIC DOOR SEALS -RP47 SI FRAME SEALS (JAMB & HEAD) RP99 SI BOTTOM SEAL FIXED TO INSIDE FACE OF DOORS TO FIT TIGHT TO FLOOR.	N/A
WEATHERPROOFING	INSTALL FLASHING, WEATHER BARS, DRIPS, STORM MOULDS, CAULKING AND POINTING TO PREVENT WATER FROM PENETRATING THE BUILDING STRUCTURE UNDER THE PREVAILING SERVICE CONDITIONS, INCLUDING NORMAL STRUCTURAL MOVEMENT OF THE BUILDING.	INSTALL FLASHING, WEATHER BARS, DRIPS, STORM MOULDS, CAULKING AND POINTING TO PREVENT WATER FROM PENETRATING THE BUILDING STRUCTURE UNDER THE PREVAILING SERVICE CONDITIONS, INCLUDING NORMAL STRUCTURAL MOVEMENT OF THE BUILDING.	INSTALL CAULKING AND POINTING TO PREVENT WATER FROM PENETRATING THE BUILDING STRUCTURE UNDER THE PREVAILING SERVICE CONDITIONS, INCLUDING NORMAL STRUCTURAL MOVEMENT OF THE BUILDING.

0 500 1000 1500 2000 2500 mm
SCALE 1:50 AT ORIGINAL SIZE

PRELIMINARY ISSUE
NOT FOR CONSTRUCTION

No.	REVISION DETAILS	DWN	CKD	APP	DATE
A	PRELIMINARY FOR REVIEW	AA	MS	CS	29/07/2016

CONSULTANT DETAILS:
GHD
Conditions of Use.
This document may only be used by GHD's client (and any other person who GHD has agreed can use this document) for the purpose for which it was prepared and must not be used by any other person or for any other purpose.
57 Graham Street Nowra NSW 2541 Australia
T 61 2 4424 4900 F 61 2 4424 4999
E noamail@ghd.com W www.ghd.com
CONSULTANT REFERENCE No. 23-1426641-04-703

Shoalhaven Water
A Group of Shoalhaven City Council

DESIGNED: L. DIAZ	DATE: 18/07/2016	COMPANY: GHD	TITLE: SHOALHAVEN WATER ST ANNS PUMPING STATION UPGRADE SWITCHROOM BUILDING OPENING SCHEDULE
DRAWN: A. ARIMADO	DATE: 18/07/2016	COMPANY: GHD	
CHECKED:	DATE:	COMPANY:	
APPROVED:	DATE:	COMPANY:	

SIZE	SCALE	INDEX No.	DRAWING No.	SHEET	REV No.
A1	AS SHOWN		23-1426641-04	703	A

Plot Date: 3/08/2016 3:38:48 PM
Cad File No: C:\Users\acarimado\Documents\Revit 2016 Local Files\23142664104_ST ANNS SWITCHROOM_acarimado.rvt

GENERAL

G1. READ THESE NOTES IN CONJUNCTION WITH OTHER ENGINEERING DRAWINGS AND PROJECT SPECIFICATIONS, AND WITH SUCH OTHER WRITTEN INSTRUCTIONS ISSUED. IN CASE OF DISCREPANCY, PRECEDENCE IS GIVEN TO DRAWINGS, THEN NOTES, THEN SPECIFICATION.

G2. CARRY OUT WORK IN A SAFE MANNER IN ACCORDANCE WITH APPLICABLE LEGISLATION, STATUTORY REGULATIONS, BY-LAWS OR RULES. CONTRACTOR IS RESPONSIBLE FOR OCCUPATIONAL HEALTH AND SAFETY OF SITE PERSONNEL AND GENERAL PUBLIC IN ACCORDANCE WITH WORK HEALTH AND SAFETY ACT 2011, LEGISLATIVE REQUIREMENTS, ASSOCIATED REGULATIONS AND CODES OF PRACTICE, INDUSTRIAL AGREEMENTS AND ACCEPTED INDUSTRY PRACTICE.

G3. REFER DISCREPANCIES TO SUPERINTENDENT BEFORE PROCEEDING WITH WORK.

DESIGN ASSUMPTIONS

G4. ALL STRUCTURES TO HAVE A DESIGN WORKING LIFE OF 50 YEARS UNO. EXCEPTION INCLUDES JOINT SEALANTS, STRUCTURAL STEELWORK ETC. WHERE PERIODIC MAINTENANCE WILL BE REQUIRED.

G5. STRUCTURAL WORK HAS BEEN DESIGNED FOR FOLLOWING LOADS:

- LOADS AS DEFINED IN DRAWINGS.
- BUILDING IMPORTANCE LEVEL : 3
- WIND LOADS TO AS/NZS1170.0:2002: AS/NZS 1170.2:2011 AND BCA
  - ~ REGION : A2
  - ~ AVERAGE RECURRENCE INTERVAL : 1000 years
  - ~ ULTIMATE REGIONAL WIND SPEED V_R (3 sec GUST): 46 m/s
  - ~ SERVICEABILITY REGIONAL WIND SPEED V_{25} (3 sec) 37 m/s
  - ~ DIRECTIONAL MULTIPLIER : 1.0
  - ~ TERRAIN CATEGORY : 2.0
  - ~ SHIELDING MULTIPLIER (M_s) : 1.0
  - ~ TOPOGRAPHIC MULTIPLIER (M_t) : 1.0
- LIVE LOADS TO AS1170.1:2002, AND AS FOLLOWS:
  - ~ ROOFS: GREATER OF 0.25 kPa OR (1.8/A) + 0.12 kPa.
  - ~ BUILDING FLOOR 5.0 kPa.

FOUNDATIONS AND FOOTINGS

F1. SITE IS CLASSIFIED AS CLASS H-D TO AS2870.

F2. REFER TO GEOTECHNICAL INVESTIGATION REPORT GEOTWOLL 03238AA-AA BY COFFEY GEOTECH DATED AUGUST 2011. NOTIFY SUPERINTENDENT IF CONDITIONS ENCOUNTERED DIFFER FROM THOSE DESCRIBED IN THE REPORT AND SEEK DIRECTIONS.

F3. REMOVE TOP SOIL CONTAINING GRASS ROOTS OR OTHER ORGANIC MATTER, RUBBLE AND / OR DEBRIS AND OTHER UNSUITABLE MATERIAL BELOW FOUNDATIONS.

F4. BACKFILL OVER EXCAVATION WITH GRADE N15 BLINDING CONCRETE.

F5. ENSURE EXCAVATIONS ARE STABLE AND PROTECT SURROUNDING PROPERTY AND SERVICES FROM ADVERSE EFFECTS OF GROUND WORKS. PROVIDE TEMPORARY WORKS AS REQUIRED. PROVIDE SHORING CERTIFIED BY SUITABLY QUALIFIED STRUCTURAL ENGINEER TO ALL DEEP EXCAVATIONS WHERE REQUIRED.

F6. USE SUITABLE CONSTRUCTION TECHNIQUES AND EQUIPMENT FOR BACKFILLING ADJACENT TO STRUCTURES TO PREVENT OVERSTRESS AND DAMAGE. BACKFILL EVENLY TO AVOID DIFFERENTIAL SOIL PRESSURES ON STRUCTURES. BACKFILL AGAINST STRUCTURES ONLY AFTER SPECIFIED CONCRETE STRENGTH IS ACHIEVED, AND PERMANENT SUPPORT INSTALLED WHERE APPLICABLE.

F7. KEEP EXCAVATIONS FREE OF WATER. PROVIDE ADEQUATE DRAINAGE TO ENSURE FORMATION IS NOT AFFECTED BY MOISTURE. PREVENT FOUNDATION DRYING OUT DUE TO EXPOSURE. PLACE BLINDING, FOOTINGS, PILES AND BACKFILL AS SOON AS PRACTICABLE AFTER EXCAVATION.

F8. PROVIDE SAFETY MESH AND OTHER PROTECTION TO PREVENT EXPOSURE OF PERSONNEL TO EXCAVATION DURING FOUNDATION CONSTRUCTION.

F9. SERVICES PASS THROUGH MIDDLE THIRD OF CONCRETE BEAM, SLEEVE SERVICES OR PROVIDE 40mm THICK CLOSED-CELL POLYETHELENE LAGGING.

F10. WHERE SERVICES PASS UNDER FOOTINGS BACKFILL TRENCHES WITH BLINDING CONCRETE FOR 150mm EACH SIDE OF FOOTING AGAINST CLEAN, DRY, UNDISTURBED NATURAL MATERIAL. PROVIDE FLEXIBLE JOINTS IN STORMWATER AND WASTEWATER SERVICES AT EXTERIOR OF BUILDING.

F11. ENSURE EXCAVATION ARE STABLE AND PROTECT SURROUNDING PROPERTY AND SERVICES FROM ADVERSE EFFECTS OF GROUND WORKS. PROVIDE TEMPORARY WORKS AS REQUIRED. PROVIDE SHORING CERTIFIED BY SUITABLY QUALIFIED STRUCTURAL ENGINEER TO ALL DEEP EXCAVATIONS WHERE REQUIRED.

F12. DO NOT EXCAVATE WITHIN 45 DEGREE INFLUENCE LINE UNDER ADJACENT FOOTINGS.

F13. ALL FOOTINGS TO BE FOUNDED 200 MIN. INTO A SOIL WITH A MINIMUM ALLWABLE BEARING CAPACITY OF 80kPa.

F14. TOP OF CONCRETE SLAB TO BE 800mm AS SHOWN ON ARCHITECTURAL DRAWINGS. GROUND SURROUNDING BUILDING TO BE SLOPED SO THAT WATER WILL DRAIN AWAY FROM BUILDING TO SUITABLE DISCHARGE POINTS. WHERE ACHIEVED BY FILLING, FILL TO BE LESS PERMEABLE THAN UNDERLYING MATERIAL.

STEEL

S1. ALL STEELWORK IS TO BE HOT DIPPED GALVANISED TO AS/NZS4680 AND AS1214 FOR FASTENERS. THICKNESS OF GALVANISED COATINGS TO AS/NZS4680. ZINC OF GALVANISING BATH TO BE NOT LESS THAN 98% PURE. BATH TEMPERATURE, TIME OF IMMERSION AND WITHDRAWAL SPEED TO BE AS REQUIRED TO ACHIEVE SPECIFIED COATING THICKNESS AND FINISH. ZINC COATING TO BE CONTINUOUS, ADHERENT, FREE FROM LUMPS, SPIKES, DAGS, RUNS, BLISTERS, ROUGHNESS, GRITTY AREAS, UNCOATED SPOTS, ACID AND BLOCK SPOTS, DROSS, FLUX AND OTHER IMPERFECTIONS.

S2. PROVIDE STEEL IN ACCORDANCE WITH:

- AS1163 GRADE C350 FOR RECTANGULAR AND SQUARE HOLLOW SECTIONS,
- AS/NZS3678 FOR PLATES AND FLOOR PLATE,
- AS/NZS3679 PART 2, GRADE 300 FOR WELDED BEAMS AND WELDED COLUMNS,
- AS/NZS3679 PART 1 GRADE 300 OR BHP GRADE 300 PLUS FOR UNIVERSAL BEAMS, UNIVERSAL COLUMNS, PARALLEL FLANGE CHANNELS, AND ANGLES,
- AS1397 GRADE 450 FOR PURLINS AND GIRTS,
- OTHERWISE TO COMPLY WITH AS/NZS3678 OR AS/NZS3679 GRADE 250 UNO.

S3. THE CONTRACTOR SHALL SUBMIT SHOP DRAWINGS TO THE SUPERINTENDENT FOR APPROVAL PRIOR TO FABRICATION.

WELDING

S4. WELDING TO BE UNDERTAKEN BY SUITABLY QUALIFIED EXPERIENCED WELDER UNDER SUPERVISION OF QUALIFIED WELDING SUPERVISOR.

S5. CARRY OUT WELDING TO AS/NZS1554: ALL INTERFACES BETWEEN STEEL SECTIONS TO BE CONNECTED WITH 6 mm CONTINUOUS FILLET WELDS ALL ROUND, BOTH SIDES UNO.

- WELDS TO BE SHOP WELDED UNO.
- WELDS TO BE CATEGORY SP.
- ELECTRODES TO BE LOW CARBON WITH TENSILE STRENGTH OF fuw=490 MPa, PRE-APPROVED TO AS/NZS1554, eg CLASSIFICATION B-E48XX.

REINFORCEMENT

R1. SYMBOLS ON DRAWINGS FOR GRADE AND TYPE OF REINFORCEMENT ARE AS FOLLOWS:

- N: HOT ROLLED GRADE 500 DEFORMED (RIBBED) BAR DUCTILITY CLASS N TO AS/NZS4671
- SL: HARD DRAWN WIRE GRADE 500 SQUARE MESH DUCTILITY CLASS L TO AS/NZS4671

R2. PROVIDE ACRS (AUSTRALIAN CERTIFICATION AUTHORITY FOR REINFORCING STEEL LTD) CERTIFICATION OF COMPLIANCE WITH AS/NZS4671 FOR ALL REINFORCEMENT.

R3. REINFORCEMENT TO BE CLEAN, FREE OF LOOSE MILL SCALE, RUST, OIL, GREASE, MUD OR OTHER MATERIAL THAT MIGHT REDUCE BOND BETWEEN REINFORCEMENT AND CONCRETE.

R4. PROVIDE ONE CONTINUOUS BAR PARALLEL TO (WITHIN 75 mm OF) CONCRETE EDGES UNO.

R5. REINFORCEMENT IS REPRESENTED DIAGRAMMATICALLY AND IS NOT NECESSARILY IN TRUE PROJECTION. SET REINFORCEMENT OUT AT EQUAL CENTRES IF SPACING IS NOT NOMINATED.

R6. DO NOT PLACE OR MOVE REINFORCEMENT DURING OR AFTER CONCRETE PLACEMENT.

R7. LAPPED SPLICE LENGTHS FOR VERTICAL BARS (AND HORIZONTAL BARS WITH LESS THAN 300 mm CONCRETE CAST BELOW THE BAR) SPACED AT ≥ 150 mm CENTRES TO COMPLY WITH THE FOLLOWING UNO:

COVER	f'c	N12	N16	N20	N24	N28	N32
≥ 25	≥20	590	890	1210	–	–	–
≥ 30	≥25	490	750	1040	1340	–	–
≥ 40	≥32	390	600	840	1110	1400	1710
≥ 50	≥40	350	480	690	920	1180	1450

DO NOT INTERPOLATE INTERMEDIATE VALUES OF SPLICE LENGTHS.
EPOXY COATED BARS, BARS IN LIGHTWEIGHT CONCRETE AND SLIP FORMED CONCRETE WILL REQUIRE LONGER SPLICE LENGTHS. REFER TO AS3600 OR SUPERINTENDENT.

R8. PROVIDE MINIMUM MESH LAPS TO CROSS WIRES OF REINFORCING MESH, SO THAT TWO OUTERMOST WIRES OF ONE SHEET OVERLAP TWO OUTERMOST WIRES OF ADJACENT SHEET BY AT LEAST 25 mm. FOR MESH TYPE SL81, USE 125 mm LAP LENGTH FOR THE END AND SIDE LAP. USE LAP LENGTHS BASED ON LARGEST WIRE SPACING.

R9. DO NOT BEND OR STRAIN REINFORCEMENT IN A WAY THAT MAY CAUSE DAMAGE. BEND DIAMETERS TO BE TO AS3600. BARS TO BE BENT COLD UNO. GRADE 250 BARS MAY BE BENT AT TEMPERATURES UP TO 850°C. DO NOT COOL HEATED BARS BY QUENCHING.

MASONRY

GENERAL

M1. MASONRY WORK TO BE TO AS3700 AND AS/NZS4455.

M2. CONSTRUCT MASONRY COMPLETE WITH BED JOINT REINFORCEMENT, FLEXIBLE MASONRY ANCHORS, WALL TIES, FIXING STRAPS etc TO AS/NZS2699. USE ONLY R4 GRADE 316 OR 316L STAINLESS STEEL.

M3. ENSURE WALLS WHICH RELY ON FLOORS FOR STABILITY ATTAIN SUFFICIENT STRENGTH BEFORE NEXT LEVEL IS COMMENCED.

M4. USE GRADE 15 CONCRETE BLOCKS ie MINIMUM CHARACTERISTIC UNCONFINED COMPRESSIVE STRENGTH (Cu)= 15 MPa TO AS/NZS4455 UNO AND OF DIMENSIONAL CATEGORY DW4 TO AS/NZS4455. USE BRICKS WITH MINIMUM CHARACTERISTIC COMPRESSIVE STRENGTH OF 20 MPa AND DIMENSIONAL CATEGORY DW1 TO AS/NZS4455 AND AS/NZS4456. DO NOT LAY CLAY BRICKS UNTIL THEY HAVE BEEN OUT OF KILN FOR AT LEAST 14 DAYS. COLOUR AND TEXTURE OF MASONRY UNITS TO BE WITHIN AN AGREED RANGE. MASONRY UNITS TO BE RESISTANT TO SALT ATTACK. MAXIMUM PERMEABILITY OF MASONRY UNITS TO BE 2 mm/minute. EFFLORESCENCE POTENTIAL OF MASONRY UNITS TO BE NIL OR SLIGHT. CHARACTERISTIC LATERAL MODULUS OF RUPTURE OF MASONRY UNITS TO BE 0.8 MPa.

PRELIMINARY ISSUE
NOT FOR CONSTRUCTION

No.	REVISION DETAILS	DWN	CKD	APP	DATE
A	PRELIMINARY FOR REVIEW	MC	MS	CS	29/07/2016

CONSULTANT DETAILS:
GHD
57 Graham Street Nowra NSW 2541 Australia
T 61 2 4424 4900 F 61 2 4424 4999
E noamail@ghd.com W www.ghd.com
Conditions of Use.
This document may only be used by GHD's client (and any other person who GHD has agreed can use this document) for the purpose for which it was prepared and must not be used by any other person or for any other purpose.
CONSULTANT REFERENCE No. 23-1426641-04-704

Shoalhaven Water
A Group of Shoalhaven City Council

DESIGNED: A. FUERTES	DATE: 20/07/2016	COMPANY: GHD	TITLE: SHOALHAVEN WATER ST ANNS PUMPING STATION UPGRADE SWITCHROOM BUILDING STRUCTURAL NOTES SHEET 1
DRAWN: M. CRUZ	DATE: 20/07/2016	COMPANY: GHD	
CHECKED:	DATE:	COMPANY:	
APPROVED:	DATE:	COMPANY:	SIZE: A1 / SCALE: AS SHOWN / INDEX No. / DRAWING No. 23-1426641-04 / SHEET 704 / REV No. A

Plot Date: 3/08/2016 10:42:38 AM Cad File No: C:\Users\mpcruz\Documents\23142664104_ST ANNS SWITCHROOM_mpcruz.rvt

M5. FOR CONCRETE BLOCKWORK USE CLASS M3 MORTAR MADE WITH 1 PART CEMENT: 5 PARTS SAND AND A METHYL CELLULOSE WATER THICKENER (eg: `DYNEX' AS PRODUCED BY A.V. SYNTEC) TO AS3700. WHERE REQUIRED IN TABLE 5 OF AS3700-2001, USE CLASS M4 MORTAR MADE WITH 1 PART CEMENT, 0 TO 0.25 PARTS LIME AND 3 PARTS SAND, OR 1 PART CEMENT AND 4 PARTS SAND PLUS A METHYL CELLULOSE WATER THICKENER (eg: `DYNEX' AS PRODUCED BY A.V. SYNTEC) TO AS3700. SUBMIT DETAILS OF PROPOSED ADDITIVES FOR SUPERINTENDENT'S APPROVAL. USE WHITE CEMENT TO AS3972 TYPE GP OR GB, WITH IRON SALTS NOT EXCEEDING 1%. USE WELL GRADED CLEAN SAND WITH LOW CLAY CONTENT (MAXIMUM 10% PASSING THE 75 MICRON SIEVE) AND FREE FROM EFFLORESCING SALTS, ORGANIC MATTER AND OTHER IMPURITIES. USE HYDRATED BUILDING LIME TO AS1672.1 COLOUR AND TEXTURE OF FACE OR POINTING MORTAR TO MATCH APPROVED SAMPLE. USE APPROVED REFRACTORY MORTAR FOR REFRACTORY BRICKWORK, AS RECOMMENDED BY MANUFACTURER.

M6. ENSURE THAT PERPENDS AND BEDS ARE COMPLETELY FILLED WITH MORTAR.

M7. MORTAR BED JOINTS AND PERPENDS TO BE FULLY BEDDED, AND 10 mm MAXIMUM AS PER SECTION 4.9 OF AS3700-2001.

M8. CONTROL JOINTS TO BE 20 mm WIDE WITH 25 mm DIAMETER CLOSED CELL POLYETHYLENE FOAM BACKING ROD AND APPROVED POLYSULPHIDE SEALANT AT EXTERNAL FACE UNO. FINISH SEALANT IN LINE WITH MORTAR JOINTS. TOLERANCE ON WIDTH +5, -0 mm. PROVIDE JOINTS IN WALL FINISHES AT CONTROL JOINTS IN MASONRY. PLACE POLYSTYRENE IN VERTICAL JOINTS DURING CONSTRUCTION TO ENSURE THAT MORTAR DROPPINGS AND OTHER HARD MATERIALS DO NOT FALL INTO OR REMAIN IN CONTROL JOINTS. REMOVE POLYSTYRENE AT COMPLETION.

M9. INSTALL CONTROL JOINTS IN MASONRY AT 6 METRES MAXIMUM CENTRES (3 METRES MAXIMUM FROM CORNERS, AND AS SHOWN ON DRAWINGS.

M10. PROVIDE WEEP HOLES IN THE FORM OF OPEN PERPENDS TO EXTERNAL LEAVES OF CAVITY WALLS IN COURSE ABOVE DAMP-PROOF COURSES, FLASHINGS AND CAVITY FILL, AND AT BOTTOMS OF UNFILLED CAVITIES. SPACING 750 mm MAXIMUM CENTRES.

LINTELS

M11. LINTEL DURABILITY REQUIREMENTS TO BE IN ACCORDANCE WITH TABLE 12.2 OF AS3700. PROVIDE ONE LINTEL TO EACH WALL LEAF IN CONFORMANCE WITH THE LINTEL SCHEDULE. KEEP LINTELS 10 mm CLEAR OF HEADS OF FRAMES. PACK MORTAR BETWEEN ANY VERTICAL COMPONENT AND SUPPORTED MASONRY UNITS. FOR ANGLES INSTALL THE LONG LEG VERTICAL. PROVIDE MINIMUM BEARING EACH END AS FOLLOWS:
-SPAN ≤ 1000 mm: 150x90x10 UA WITH 200 mm END BEARING.
-SPAN > 1000 mm ≤ 3000 mm: 150x90x10 UA (LONG LEG VERTICAL) 200 mm END BEARING.
TEMPORARILY PROP LINTELS UNTIL THE MASONRY REACHES REQUIRED STRENGTH TO PREVENT DEFLECTION OR EXCESSIVE ROTATION.

M12. PROP COMPOSITE STEEL AND MASONRY LINTELS UNTIL MORTAR IN COURSES OF MASONRY BEING ENGAGED ABOVE LINTEL HAS CURED IN ACCORDANCE WITH MANUFACTURER'S SPECIFICATIONS.

REINFORCED MASONRY

M13. USE CONCRETE GROUT FOR FILLING CORES WITH:
- MINIMUM f'c = 20 MPa TO AS3600.
- MINIMUM CEMENT CONTENT = 300 kg/m^3.
- MAXIMUM AGGREGATE SIZE = 10 mm.
- SLUMP = 230 ± 30 mm TO AS1012.3.

M14. FOR BOND BEAMS USE CONCRETE WITH f'c = 20 MPa TO AS3600, SLUMP = 80 ±15 mm TO AS1012.3.

M15. REMOVE MORTAR DROPPINGS FROM BOTTOM OF CORES BY USE OF CLEANOUT BLOCKS BEFORE PLACING CONCRETE AND AT HORIZONTAL BREAKS IN CONSTRUCTION. REMOVE MORTAR FINS PROTRUDING FROM JOINTS BEFORE PLACING CONCRETE.

M16. DO NOT PROCEED WITH BLOCKWORK CONSTRUCTION MORE THAN SIX COURSES OR 1500 mm AHEAD OF CONCRETE PLACEMENT.

M17. STOP CONCRETE 50 mm BELOW TOP OF BLOCKS TO PROVIDE KEY FOR FOLLOWING CONCRETE. ENSURE PROPER COMPACTION OF CONCRETE BY "RODDING" OR OTHER APPROVED MEANS.

LIGHT STEEL FRAMING

L1. ROOF FRAMING INCLUDING ROOF BRACING. BLOCKING AND TIE DOWNS TO RESIST UPLIFT, ETC TO BE DESIGNED TO AS4600 AND NASH STANDARD FOR RESIDENTIAL AND LOWRISE STEEL FRAMING AND CERTIFIED BY AN INDEPENDENT CHARTERED ENGINEER PROVIDE WORKSHOP DRAWINGS AND DESIGN CALCULATIONS. SUBMIT THREE COPIES OF EACH TO PRINCIPAL'S REPRESENTATIVE FOR REVIEW OF GENERAL COMPLIANCE WITH DESIGN CONCEPTS. DO NOT COMMENCE FABRICATION UNTIL SHOP DRAWINGS HAVE BEEN REVIEWED. PRINCIPAL'S REPRESENTATIVE REVIEW DOES NOT INCLUDE CHECKING OF DIMENSIONS, AND DOES NOT RELIEVE CONTRACTOR OF RESPONSIBILITY FOR COMPLIANCE WITH DRAWINGS AND SPECIFICATIONS.

L2. DESIGN CALCULATIONS/SHOP DRAWINGS TO SHOW: ARRANGEMENT OF MEMBERS, LOCATION OF MEMBERS IN BUILDING, LOADING PARAMETERS AND BRACING LENGTHS ASSUMED IN DESIGN, SIZE OF EACH MEMBER, TOLERANCES ON MEMBER SIZES, JOINT DETAILS INCLUDING LIFTING POINTS, METHOD OF FIXING AND BRACING, CORROSION PROTECTION, LONG TERM DEFLECTION, METHOD OF FABRICATION, SIZE AND SPECIFICATION OF GUSSETS, GUSSET FASTENINGS, BASE PLATE DETAILS, FIXINGS FOR PURLINS, GIRTS AND BRACING, METHOD OF HANDLING ERECTION INCLUDING TEMPORARY BRACING REQUIRED, (IF ANY) PRECAMBER, ETC.

L3. ROOF FRAMING SHALL BE DESIGNED FOR THE FOLLOWING LOADS:
· DEAD LOADS ROOF CLADDING, FRAMING AND CEILINGS
· PLANT AND DUCTS AS SHOWN ON MECHANICAL SHOP DRAWINGS.
· ADDITIONAL TRUSS LOADS OF 0.15 kPa AS NOTED ON THIS DRAWING

L4. MAX LONG TERM DEFLECTION OF ROOF FRAMING UNDER PERMANENT LOAD = SPAN/600.

L5. MAX DEFLECTION UNDER OTHER LOADS: SPAN/400 OR 20mm WHICHEVER IS SMALLER.

L6. DESIGN ROOF BRACING IS THE RESPONSIBILITY OF ROOF FRAMING DESIGNER. BRACING SHOWN IN THE DRAWING IS INDICATIVE ONLY. PLATE SHALL BE ALLOY 5251-O

ADDITIONAL TRUSS LOADS:

0.15 kPa (15kg/m^2) SERVICES LOAD (MECHANICAL AND ELECTRICAL) ACTING ON BOTTOM CHORDS OF TRUSSES.

PRELIMINARY ISSUE
NOT FOR CONSTRUCTION

No.	REVISION DETAILS	DWN	CKD	APP	DATE
A	PRELIMINARY FOR REVIEW	MC	MS	CS	29/07/2016

CONSULTANT DETAILS:
GHD
Conditions of Use.
This document may only be used by GHD's client (and any other person who GHD has agreed can use this document) for the purpose for which it was prepared and must not be used by any other person or for any other purpose.
57 Graham Street Nowra NSW 2541 Australia
T 61 2 4424 4900 F 61 2 4424 4999
E noamail@ghd.com W www.ghd.com
CONSULTANT REFERENCE No.
23-1426641-04-705

Shoalhaven Water
A Group of Shoalhaven City Council

DESIGNED: A. FUERTES	DATE: 20/07/2016	COMPANY: GHD	TITLE: SHOALHAVEN WATER ST ANNS PUMPING STATION UPGRADE SWITCHROOM BUILDING STRUCTURAL NOTES SHEET 2
DRAWN: M. CRUZ	DATE: 20/07/2016	COMPANY: GHD	
CHECKED:	DATE:	COMPANY:	
APPROVED:	DATE:	COMPANY:	

SIZE	SCALE	INDEX No.	DRAWING No.	SHEET	REV No.
A1	AS SHOWN		23-1426641-04	705	A

Plot Date: 3/08/2016 10:42:41 AM
Cad File No: C:\Users\mpcruz\Documents\23142664104_ST ANNS SWITCHROOM_mpcruz.rvt

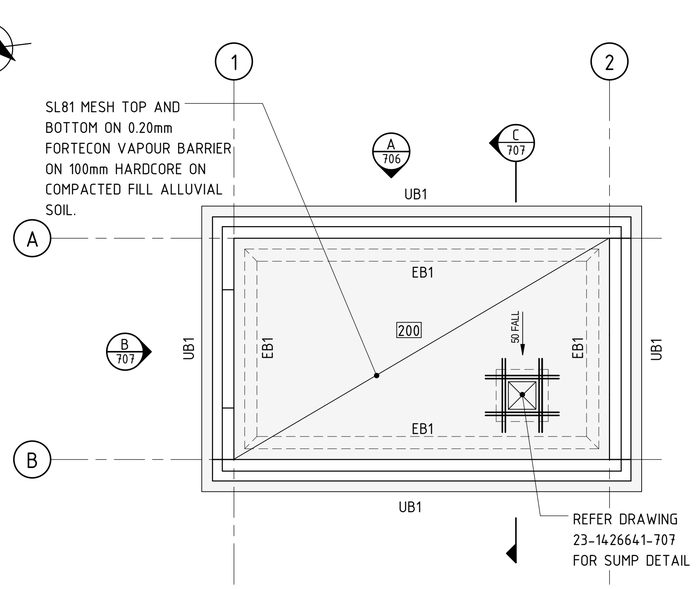

FOUNDATION PLAN
SCALE 1 : 50

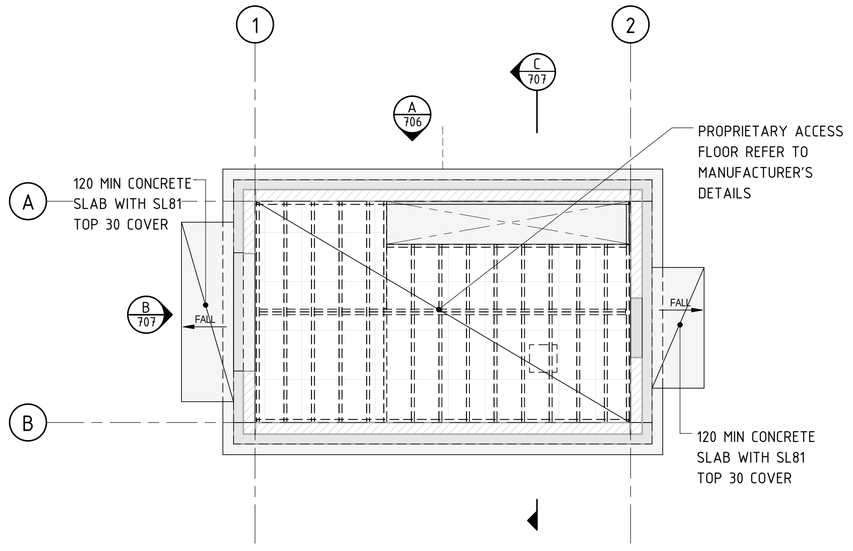

GROUND FLOOR FRAMING PLAN
SCALE 1 : 50

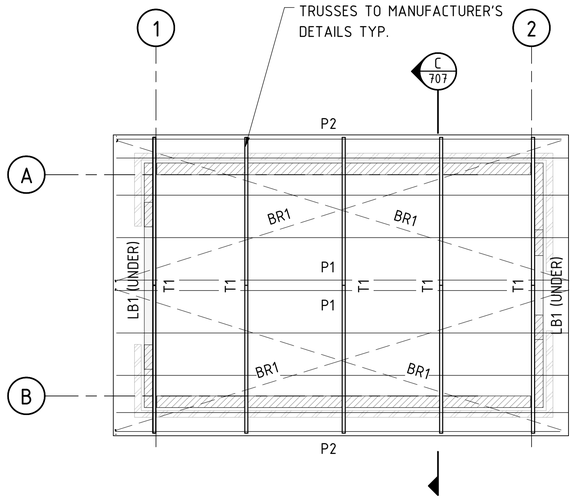

ROOF FRAMING PLAN
SCALE 1 : 50

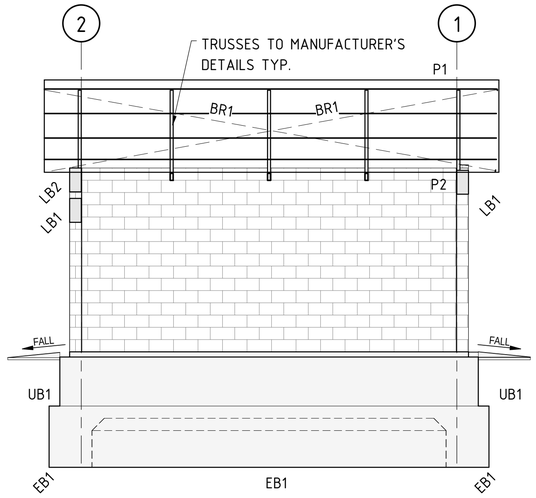

A 706 ELEVATION
SCALE 1 : 50

0 500 1000 1500 2000 2500 mm
SCALE 1:50 AT ORIGINAL SIZE

NOTES:

1. REFER TO ARCHITECTURAL DRAWINGS FOR ALL LEVELS, SETOUT, DIMENSIONS, SLAB SETDOWNS, CONTROL JOINT DETAILS, HOBS AND FALLS.
2. REFER TO DRAWINGS 23-1426641-704 AND 705 FOR STRUCTURAL NOTES.
3. FALSE FLOOR SHALL BE DESIGNED FOR THE FOLLOWING LOADS:
   - EQUIPMENT WEIGHT
   - LIVE LOAD = 5kPa

LEGEND:

- 200 — DENOTES 200 SLAB THICKNESS
- DENOTES BEAM REBATE/ EXTERNAL SLAB LOCATIONS
- DENOTES BLOCKWORK WALL
- DENOTES BRICKWORK WALL

CONCRETE ELEMENTS:

STRUCTURAL ELEMENT	BLINDING	SLAB / FOOTINGS
EXPOSURE CLASSIFICATION	B1	B1
STRENGTH GRADE (MPa)	N15	N25
MIN. DENSITY (kg/m^3)	-	2350
MAX. AGGREGATE SIZE (mm)	20	20
CEMENT TYPE	GP	GP

FOOTING SCHEDULE

MARK	SIZE	REMARKS
EB1	700Wx1000D	4N20 TOP&BOTTOM BARS W/ N12 LIGS @ 400

BEAM SCHEDULE

MARK	SIZE	REMARKS
LB1	190W x 390D	400 MIN END BEARING REFER TO DETAIL
UB1	350W x 885D	REFER DETAIL

ROOF FRAMING SCHEDULE

MARK	SIZE	REMARKS
BR1	STEEL BRACING	PRYDA SPREEDBRACE SCREW FIXED TO EVERY PURLIN
P1	C 100x12	CONTINUOUS SPAN ROOF PURLIN @ 800 MAX CTS
P2	230FP19	FASCIA PURLIN
T1	TRUSS	STEEL FRAME ROOF TRUSSES @ 1300 MAX CTS. TO MANUFACTURER'S DETAILS

PRELIMINARY ISSUE
NOT FOR CONSTRUCTION

No.	REVISION DETAILS	DWN	CKD	APP	DATE
A	PRELIMINARY FOR REVIEW	MC	MS	CS	29/07/2016

CONSULTANT DETAILS:
GHD
Conditions of Use.
This document may only be used by GHD's client (and any other person who GHD has agreed can use this document) for the purpose for which it was prepared and must not be used by any other person or for any other purpose.
57 Graham Street Nowra NSW 2541 Australia
T 61 2 4424 4900 F 61 2 4424 4999
E noamail@ghd.com W www.ghd.com
CONSULTANT REFERENCE No.
23-1426641-04-706

Shoalhaven Water
A Group of Shoalhaven City Council

		DATE	COMPANY
DESIGNED:	A. FUERTES	18/07/2016	GHD
DRAWN:	M. CRUZ	18/07/2016	GHD
CHECKED:			
APPROVED:			

TITLE:
SHOALHAVEN WATER
ST ANNS PUMPING STATION UPGRADE
SWITCHROOM BUILDING
FOUNDATION, FRAMING PLANS, ELEVATION AND NOTES

SIZE	SCALE	INDEX No.	DRAWING No.	SHEET	REV No.
A1	AS SHOWN		23-1426641-04	706	A

Plot Date: 3/08/2016 10:42:42 AM
Cad File No: C:\Users\mpcruz\Documents\23142664104_ST ANNS SWITCHROOM_mpcruz.rvt

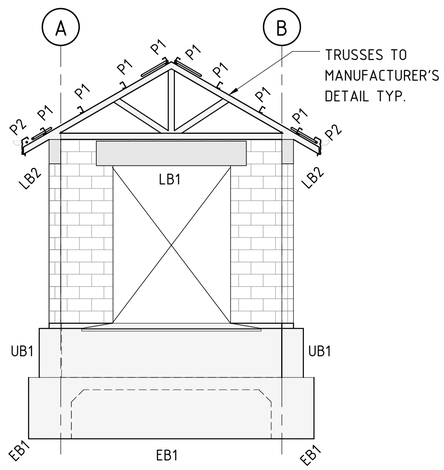

B 706 ELEVATION
SCALE 1 : 50

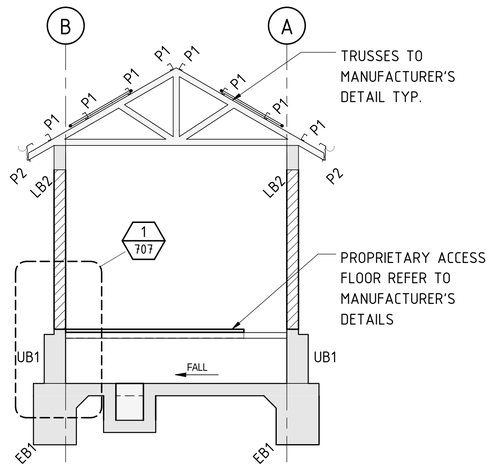

C 706 SECTION
SCALE 1 : 50

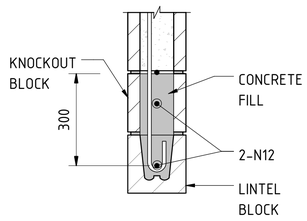

LINTEL BEAM DETAIL (LB1)
SCALE 1 : 10

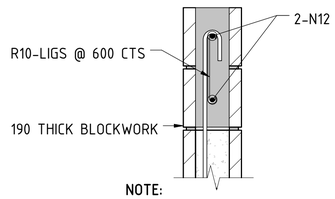

NOTE:
BOND BEAM REQUIRED AT TOP OF ALL BLOCKWORK WALLS

2 COURSE BOND BEAM (LB2)
SCALE 1 : 10

NOTES:

1. REFER TO ARCHITECTURAL DRAWINGS FOR ALL LEVELS, SETOUT, DIMENSIONS, SLAB SETDOWNS, CONTROL JOINT DETAILS, HOBS AND FALLS.
2. REFER TO DRAWINGS 23-1426641-704 AND 705 FOR STRUCTURAL NOTES.
3. FALSE FLOOR SHALL BE DESIGNED FOR THE FOLLOWING LOADS:
   - EQUIPMENT WEIGHT
   - LIVE LOAD = 5kPa

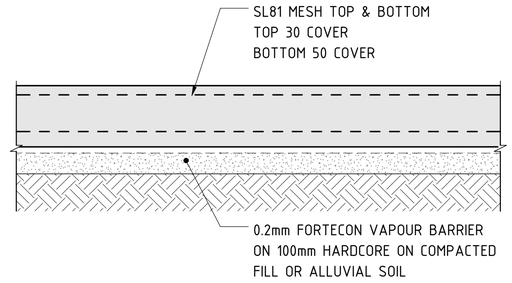

TYPICAL SLAB DETAIL
SCALE 1 : 10

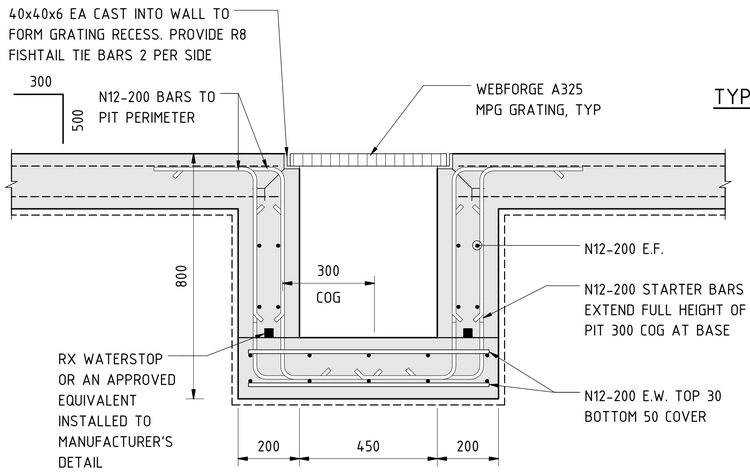

SUMP DETAIL
SCALE 1 : 10

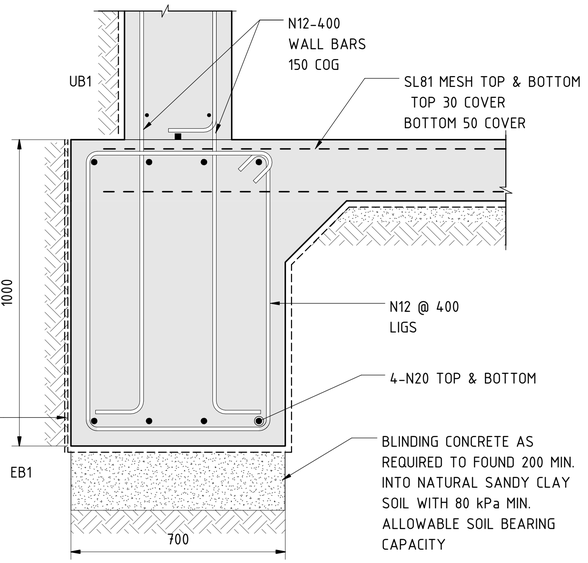

0 100 200 300 400 500 mm
SCALE 1:10 AT ORIGINAL SIZE

TYPICAL EDGE BEAM (EB1)
SCALE 1 : 10

0 200 400 600 800 1000 mm
SCALE 1:20 AT ORIGINAL SIZE

0 500 1000 1500 2000 2500 mm
SCALE 1:50 AT ORIGINAL SIZE

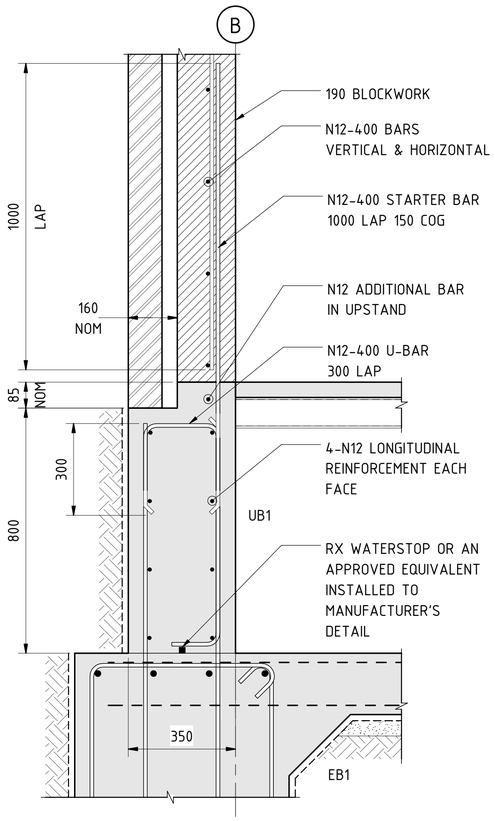

1 707 DETAIL
SCALE 1 : 10

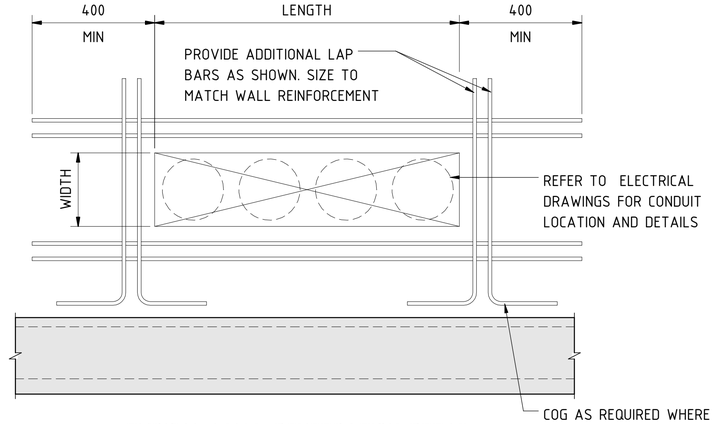

TYPICAL WALL PENETRATION DETAIL
SCALE 1 : 10

PRELIMINARY ISSUE
NOT FOR CONSTRUCTION

No.	REVISION DETAILS	DWN	CKD	APP	DATE
A	PRELIMINARY FOR REVIEW	MC	MS	CS	29/07/2016

CONSULTANT DETAILS:
GHD
57 Graham Street Nowra NSW 2541 Australia
T 61 2 4424 4900 F 61 2 4424 4999
E noamail@ghd.com W www.ghd.com

Conditions of Use.
This document may only be used by GHD's client (and any other person who GHD has agreed can use this document) for the purpose for which it was prepared and must not be used by any other person or for any other purpose.

CONSULTANT REFERENCE No. 23-1426641-04-707

Shoalhaven Water
A Group of Shoalhaven City Council

DESIGNED: A. FUERTES	DATE: 20/07/2016	COMPANY: GHD	TITLE: SHOALHAVEN WATER ST ANNS PUMPING STATION UPGRADE SWITCHROOM BUILDING SECTIONS AND DETAILS	
DRAWN: M. CRUZ	DATE: 20/07/2016	COMPANY: GHD		
CHECKED:	DATE:	COMPANY: GHD		
APPROVED:	DATE:	COMPANY: GHD	SIZE: A1 / SCALE: AS SHOWN / INDEX No.	DRAWING No. 23-1426641-04 / SHEET 707 / REV No. A

Plot Date: 3/08/2016 3:49:32 PM
Cad File No: C:\Users\acarimado\Documents\Revit 2016 Local Files\23142664104_ST ANNS SWITCHROOM_acarimado.rvt

Shoalhaven Water

Volume 2 – Drawings

Separable Portion B: SPS2 Lyrebird Park

SHOALHAVEN WATER

LYREBIRD PARK NOWRA

SPS2 UPGRADE



LOCALITY PLAN
NTS

DRAWING LIST	
DRG No.	TITLE
24356-200	COVER SHEET AND LOCALITY PLAN
24356-201	GENERAL NOTES
24356-202	SPECIFICATION FOR EMERGENCY STORAGE TANK
24356-203	STRUCTURAL NOTES - SHEET 1 OF 2
24356-204	STRUCTURAL NOTES - SHEET 2 OF 2
24356-206	WET WELL PENETRATION DETAIL
24356-207	SPS ACCESS DETAIL
24356-208	RPZ TYPICAL LAYOUT
24356-212	SITE LAYOUT PLAN
24356-213	SITE PLAN - MAINTENANCE VEHICLE TURNING CIRCLE
24356-214	LEVEL AND CAPACITIES INTERACTION DIAGRAM
24356-215	SPS AND VALVE CHAMBER PIPEWORK PLAN
24356-216	SPS AND VALVE CHAMBER PIPEWORK SECTION
24356-217	EMERGENCY STORAGE TANK PLAN AND SECTION
24356-218	NEW RISING MAIN PLAN AND SECTION
24356-219	NEW GRAVITY MAIN SECTION
24356-220	STORAGE TANK AND MANHOLE CONNECTION DETAILS
24356-223	SPS AND VALVE CHAMBER - CONCRETE PLANS AND SECTIONS
24356-224	SPS AND VALVE CHAMBER - CONCRETE PLANS AND SECTIONS
24356-225	SPS AND VALVE CHAMBER - ROOF PLAN AND DETAILS
24356-226	TYPICAL STRUCTURAL DETAILS
24356-230	EMERGENCY STORAGE TANK ACCESS HATCH DETAILS
24356-231	PIPE BRACKET AND LEVEL SENSOR DETAILS
24356-240	SWITCHROOM BUILDING FLOOR PLAN AND ROOF PLAN
24356-241	SWITCHROOM BUILDING ELEVATIONS AND SECTIONS
24356-242	SWITCHROOM BUILDING WALL SECTION DETAILS
24356-243	SWITCHROOM BUILDING OPENING SCHEDULE
24356-244	SWITCHROOM BUILDING STRUCTURAL NOTES SHEET 1
24356-245	SWITCHROOM BUILDING STRUCTURAL NOTES SHEET 2
24356-246	SWITCHROOM BUILDING FOUNDATION, FRAMING PLANS, ELEVATION AND NOTES
24356-247	SWITCHROOM BUILDING SECTIONS AND DETAILS SHEET 1
24356-248	SWITCHROOM BUILDING SECTIONS AND DETAILS SHEET 2

TENDER ISSUE
NOT FOR CONSTRUCTION

No.	REVISION DETAILS		
1	REISSUED FOR TENDER	RK	16.04.21
0	ISSUED FOR TENDER	CW	07.09.17

CONSULTANT DETAILS:
GHD
57 Graham Street Nowra NSW 2541
T 61 2 4424 4900 F 61 2 4424 4999
E noamail@ghd.com W www.ghd.com

CONSULTANT REFERENCE No.
24356-200

Shoalhaven Water
A Group of Shoalhaven City Council

DESIGNED: CW	DATE: 26.03.15	COMPANY: GHD	
DRAWN: JC	DATE: 26.03.15	COMPANY: GHD	
CHECKED: SR	DATE: 20.05.15	COMPANY: GHD	
APPROVED: CS	DATE: 07.09.17	COMPANY: GHD	

TITLE:
SHOALHAVEN WATER
LYREBIRD PARK NOWRA SPS2 UPGRADE

COVER SHEET AND LOCALITY PLAN

SIZE:	SCALE:	INDEX No.	DRAWING No.	SHEET	REV No.
A1	N.T.S.		24356	200	1

Plot Date: 15/04/21 - 21:30 Cad File: N:\AU\Wollongong\Projects\23\12540351\CADD\Drawings\Lyrebird\24356-200.dwg

GENERAL NOTES:

1. ALL CONSTRUCTION SHALL BE PERFORMED IN ACCORDANCE WITH THE DRAWINGS, WITH THE CURRENT VERSION OF THE WATER SERVICES ASSOCIATION OF AUSTRALIA - SEWERAGE CODE OF AUSTRALIA - WSA 02-2002 V2.3 AND SHOALHAVEN WATER'S SUPPLEMENT TO THE WATER SERVICES ASSOCIATION OF AUSTRALIA - SEWERAGE CODE OF AUSTRALIA (WSA 02-2002) VERSION 2.3, THESE NOTES AND THE SPECIFICATION. THE CONTRACTOR SHALL ENSURE THAT THEY ARE CONVERSANT WITH ALL CURRENT REVISIONS, AMENDMENTS AND UPDATES THAT SHOALHAVEN WATER HAS MADE TO THEIR STANDARDS.
2. THE CONTRACTOR SHALL OBTAIN A SECTION 138 CONSENT FROM SHOALHAVEN CITY COUNCIL TO OPERATE A CONSTRUCTION SITE WITHIN THE ROAD RESERVE. THE CONTRACTOR SHALL COMPLY WITH ALL CONDITIONS CONTAINED WITHIN THE SECTION 138 CONSENT.
3. THE CONTRACTOR SHALL OBTAIN AN APPROVED ROAD OCCUPANCY LICENCE FROM ROADS AND MARITIME SERVICES (RMS) WHEN WORKS IMPACT THE PRINCES HIGHWAY AND SHOALHAVEN RIVER BRIDGE.
4. TRENCHSTOPS AND BULKHEADS SHALL BE PROVIDED IN ACCORDANCE WITH WSA-02 SECTION 8.10 AND TABLE 7.5 AND DRG No. WAT-1209.
5. ALL DRIVEWAYS SHALL BE UNDERBORED UNLESS OTHERWISE SHOWN ON THE DRAWINGS OR AGREED IN WRITING WITH THE SUPERINTENDENT'S REPRESENTATIVE PRIOR TO CONSTRUCTION.

SURVEY, SET OUT AND ASSET RECORDING:

6. ALL LEVELS ARE IN METRES TO AHD.
7. ALL CO-ORDINATES ARE IN METRES TO THE MAP GRID OF AUSTRALIA (MGA 56- 94).
8. THE CONTRACTOR IS DIRECTLY RESPONSIBLE FOR ENSURING THE PROJECT SET OUT IS CONSISTENT WITH THE DESIGN. THE CONTRACTOR SHALL PROVIDE ALL LABOUR, MATERIALS AND EQUIPMENT NECESSARY FOR THE ACCURATE SETTING OUT OF THE ENTIRE WORKS. THE CONTRACTOR SHALL ENSURE THE PIPES ARE LAID TO CORRECT INVERT LEVELS. SHOULD ACTUAL SITE CONDITIONS CONFLICT IN ANY WAY WITH THAT DOCUMENTED, THE CONTRACTOR SHALL CONTACT THE SUPERINTENDENT'S REPRESENTATIVE FOR CLARIFICATION BEFORE PROCEEDING.
9. THE CONTRACTOR SHALL BE RESPONSIBLE FOR LOCATING ALL SERVICES PRIOR TO COMMENCEMENT OF CONSTRUCTION.
10. THE CONTRACTOR IS TO ENGAGE A SUITABLY QUALIFIED AND EXPERIENCED SURVEYOR TO UNDERTAKE ASSET RECORDING OF THE WORK. ALL SURVEYOR WORKS AND DATA RECORDING SHALL BE UNDERTAKEN IN ACCORDANCE WITH THE CURRENT VERSION OF THE SHOALHAVEN WATER TECHNICAL SPECIFICATION FOR WORK AS EXECUTED INFORMATION DOCUMENT NO. D13/14490.
11. ALL CHAINAGES ARE IN METRES.
12. OFFSET FROM PARALLEL SERVICES ARE FOR INFORMATION ONLY AND ARE APPROXIMATE CENTRELINE TO CENTRELINE DISTANCES.

PRODUCTS AND MATERIALS:

13. ALL PRODUCTS AND MATERIALS SHALL COMPLY WITH THE DRAWINGS AND THE SPECIFICATION.
14. FOR POLYETHYLENE PIPE CONSTRUCTION, REFER TO WSA 01 (POLYETHYLENE PIPELINE CODE). WELDERS SHALL BE ACCREDITED TO PMBWELD301A (BUTT WELD POLYETHYLENE PLASTIC PIPELINES) AND PMBWELD302B (ELECTROFUSION WELD POLYETHYLENE PIPELINES).
15. BOLLARDS TO BE HEAVY DUTY GALVANIZED STEEL'SECURAPOST' 1200mm HIGH 125 NB WITH PADLOCK AND SLEEVE BY LEDA SECURITY PRODUCTS OR APPROVED EQUIVALENT. FINISH SHALL BE FACTORY POWDER COAT TO AS3715 IN 'INDUSTRIAL YELLOW', WALL THICKNESS TO BE NOM. 5.4mm. BOLLARDS TO BE INSTALLED AS PER MANUFACTURERS SPECIFICATIONS AND DETAILS.

APPURTENANCES (FITTINGS):

16. ALL VALVES SHALL BE MARKED ACCORDING TO SHOALHAVEN WATER STANDARD DRG Nos. W20855-05 AND SOP 022.
17. VALVE SURROUNDS AND COVERS SHALL BE CONSTRUCTED IN ACCORDANCE WITH WSA03 STANDARD DRG Nos. WAT-1303 AND WAT-1304.
18. FOLLOWING THE SATISFACTORY COMPLETION OF PRESSURE TESTING, WRAP ALL BURIED NUTS AND BOLTS, EXCEPT STAINLESS STEEL, WITH DENSO 300 PRIMER AND 400 MASTIC/440 CORD AND THEN WRAP THE ENTIRE JOINT IN DENSO 600 TAPE (DOUBLE THCKNESS) AND OVERWRAP WITH DENSO 931 OVERWRAP (MINIMUM 55% OVERLAP) IN ACCORDANCE WITH THE MANUFACTURER'S RECOMMENNDATIONS. OTHER APPROVED EQUIVALENT PRODUCT MAY BE USED.
19. ALL BURIED DUCTILE IRON FITTINGS SHALL BE COATED INTERNALLY AND EXTERNALLY WITH FUSION BONDED EPOXY, RESIN OR APPROVED EQUIVALENT.
20. ALL BURIED DUCTILE IRON FITTINGS SHALL BE PROTECTED UPON PIPELAYING WITH AN OVERWRAPPING OF POLYETHYLENE SLEEVING OR SHEET. DETAILS OF THE OVERWRAP SHALL BE TO THE REQUIREMENTS OF AS3680 AND THE MANUFACTURER.
21. ALL VALVES SHALL BE LOCATED DIRECTLY OUT FROM THE APEX OF THE SPLAY CORNER (UNLESS OTHERWISE INDICATED).
22. ALL BOLTS ON PE FLANGE CONNECTIONS SHALL BE RE-TIGHTENED AFTER A MINIMUM OF 4 HRS FROM INITIAL TIGHTENING.

SEWER MAIN ALIGNMENT, TRENCHING & COVER:

23. TRENCH, PIPE PLACEMENT, EMBEDMENT AND BACKFILL SHALL BE IN ACCORDANCE WITH THE CURRENT VERSION OF THE WATER SERVICES ASSOCIATION OF AUSTRALIA - SEWERAGE CODE OF AUSTRALIA - WSA 02-2002 V2.3 AND SHOALHAVEN WATER'S SUPPLEMENT TO THE WATER SERVICES ASSOCIATION OF AUSTRALIA - SEWERAGE CODE OF AUSTRALIA (WSA 02-2002) VERSION 2.3.

TREE REMOVAL + PRUNING:

24. REFER TO REF FOR TREE MANAGEMENT.
25. REFER TO REF SECTION 6.3.1, TABLE 6.2 FOR TREE SPECIES, SECTION 6.3.2 FOR DETAILS ON THE TREE REMOVAL + PRUNING, AND SECTION 6.3.3 FOR MITIGATION MEASURES.

THRUST RESTRAINT:

26. MINIMUM THRUST AREA FOR THRUST BLOCKS (SQUARE METRES)

SOIL CLASSIFICATON	STIFF CLAY, MEDIUM DENSE CLEAN SAND	VERY STIFF CLAY, DENSE SAND, GRAVEL DECOMPOSED ROCK	HARD CLAY, SOUND ROCK
ALLOWABLE BEARING PRESSURE, kPa	50	100	200
DN300 45° ELBOW	1.7	0.85	0.43
DN300 45° WYE	1.7	0.85	0.43
DN300x100 TEE	0.19	0.1	0.05

27. USE MINIMUM GRADE N25 CONCRETE FOR THRUST RESTRAINT. JOINTS, BOLTS AND NUTS TO BE CLEAR OF CONCRETE. CONCRETE BLOCKS MUST BE KEPT CLEAR OF OTHER SERVICES.
28. ALL VALVES WITH UNRESTRAINED PIPES ON ONE OR BOTH SIDE(S) REQUIRE AN IN-LINE CONCRETE BLOCK.
29. CONCRETE THRUST BLOCKS SHALL BE CURED FOR A MINIMUM OF 7 DAYS BEFORE BEING SUBJECTED TO ANY THRUST LOAD.
30. CONSTRUCT CONCRETE THRUST RESTRAINTS AS PER DRG Nos. WSA 03 WAT-1205 AND WAT-1207.
31. THE CONTRACTOR SHALL VERIFY THE HORIZONTAL BEARING CAPACITY PRIOR TO INSTALLATION OF THRUST BLOCKS IN ACCORDANCE WITH WSA STANDARD DRG WSA 03 WAT-1200. REFER TO THE SUPERINTENDENT'S REPRESENTATIVE FOR FURTHER INSTRUCTIONS SHOULD THE ESTIMATED ALLOWABLE HORIZONTAL BEARING CAPACITY BE LESS THAN THAT NOMINATED ABOVE.
32. WHEN POURING CONCRETE AGAINST FITTINGS, PLACE A MEMBRANE OF POLYETHYLENE BETWEEN THE FITTING AND CONCRETE TO PREVENT DAMAGE TO THE FITTING. JOINTS SHALL BE CLEAR OF CONCRETE.

OTHER SERVICES:

33. TO RECEIVE THE MOST UP TO DATE INFORMATION PRIOR TO CONSTRUCTION, "DIAL BEFORE YOU DIG" SHALL BE UNDERTAKEN BY THE CONTRACTOR TO AID IN THE LOCATION OF OTHER SERVICES. OTHER SERVICES SHALL BE CAREFULLY LOCATED PRIOR TO FULL EXCAVATION AT THE CONTRACTOR'S COST. IF A SERVICE CLASH ARISES THE CONTRACTOR SHALL IMMEDIATELY NOTIFY THE SUPERINTENDENT'S REPRESENTATIVE. RECORDS OF SERVICE LOCATION SHALL BE SUBMITTED TO THE SUPERINTENDENT'S REPRESENTATIVE AT THE COMPLETION OF THE WORKS. CLEARANCES BETWEEN SEWER MAINS AND OTHER UNDERGROUND SERVICES SHALL BE IN ACCORDANCE WITH SECTION 4.4.5.2 TABLE 4.2 IN SHOALHAVEN WATER SUPPLEMENT TO WSA02-2002 V2.3 THESE CLEARANCES SHALL APPLY TO SURFACE COVERS AS WELL AS UNDERGROUND ASSETS.
34. THE CONTRACTOR SHALL NOTIFY THE RELEVANT SERVICE AUTHORITIES PRIOR TO THE COMMENCEMENT OF SERVICE LOCATIONS AND CONSTRUCTION IN THE VICINITY OF SERVICES.

CONSTRUCTION STAGING:

35. MAXIMUM LENGTH FOR EACH CONSTRUCTED SECTION SHALL BE 1,000 METRES. NO MORE THAN TWO SECTIONS CAN BE WORKED ON BY THE CONTRACTOR WITHOUT THE WRITTEN APPROVAL FROM THE SUPERINTENDENT'S REPRESENTATIVE.
36. ONE OF THE TWO SECTIONS OF THE MAIN SHALL BE TESTED, APPROVED AND SIGNED OFF BY THE SUPERINTENDENT'S REPRESENTATIVE PRIOR TO THE COMMENCEMENT OF THE CONSTRUCTION OF THE THIRD SECTION.

TESTING, ASSET ACCEPT AND LIVE CONNECTIONS:

37. PRESSURE TESTING SHALL BE UNDERTAKEN IN ACCORDANCE WITH THE SPECIFICATION. MAXIMUM TEST PRESSURE SHALL BE 1600kPa.
38. THE CONTRACTOR AND/OR CONSULTANT SHALL PROVIDE 5 DAYS NOTICE TO THE SUPERINTENDENT'S REPRESENTATIVE PRIOR TO TESTING BEING UNDERTAKEN.\
39. THE CONTRACTOR SHALL PROVIDE AT LEAST 7 DAYS NOTICE TO THE SUPERINTENDENT'S REPRESENTATIVE PRIOR TO CONNECTING NEW WORKS TO THE EXISTING NETWORK.
40. THE CONTRACTOR SHALL COORDINATE ALL CUT OVER AND SEWER ISOLATION WORKS WITH SHOALHAVEN WATER.

WARNING
BEWARE OF UNDERGROUND SERVICES
THE LOCATION OF UNDERGROUND SERVICES ARE APPROXIMATE ONLY AND THEIR EXACT POSITION SHOULD BE PROVEN ON SITE. NO GUARANTEE IS GIVEN THAT ALL EXISTING SERVICES ARE SHOWN.

DIAL BEFORE YOU DIG www.1100.com.au

TENDER ISSUE
NOT FOR CONSTRUCTION

No.	REVISION DETAILS		
1	REISSUED FOR TENDER	RK	16.04.21
0	ISSUED FOR TENDER	CW	07.09.17

CONSULTANT DETAILS:
GHD
57 Graham Street Nowra NSW 2541
T 61 2 4424 4900 F 61 2 4424 4999
E noamail@ghd.com W www.ghd.com

CONSULTANT REFERENCE No. 24356-201

Shoalhaven Water
A Group of Shoalhaven City Council

DESIGNED: CW	DATE: 26.03.15	COMPANY: GHD	
DRAWN: JC	DATE: 16.07.15	COMPANY: GHD	
CHECKED: SW	DATE: 20.05.15	COMPANY: GHD	
APPROVED: CS	DATE: 07.09.17	COMPANY: GHD	

TITLE:
SHOALHAVEN WATER
LYREBIRD PARK NOWRA SPS2 UPGRADE

GENERAL NOTES

SIZE:	SCALE:	INDEX No.	DRAWING No.	SHEET	REV No.
A1	N.T.S.		24356	201	1

Plot Date: 15/04/21 - 21:30 Cad File: N:\AU\Wollongong\Projects\23\12540351\CADD\Drawings\Lyrebird\24356-201.dwg

GENERAL NOTES

G1. THE WORK COVERED BY THIS SPECIFICATION INCLUDES THE FURNISHING OF ALL PLANT, LABOUR, EQUIPMENT AND MATERAILS AS REQUIRED OR NECESSARY FOR THE DESIGN AND CONSTRUCTION OF REINFORCED CONCRETE EMERGENCY TANKS AS SHOWN ON THE DRAWINGS AND/OR AS SPECIFIED HEREIN.

G2. DESIGN OF EMERGENCY STORAGE TANKS SHALL BE UNDERTAKEN AND CERTIFIED BY QUALIFIED EXPERIENCED ENGINEERS REGISTERED WITH THE INSTITUTION OF ENGINEERS OF AUSTRALIA AND THE NATIONAL PROFESSIONAL ENGINEERING REGISTER SCHEME.

DESIGN REQUIREMENTS

G3. DESIGN LIFE = 50 YRS.

G4. DIMENSION AND LEVEL: EMERGENCY STORAGE TANK DIMENSIONS AND LEVELS SUCH AS INTERNAL DIAMETER, HEIGHT, FLOOR LEVEL, TOP OF ROOF LEVEL, OVERFLOW LEVEL, CONNECTION DETAILS ECT.TO BE AS SHOWN ON THE EMERGENCY STORAGE TANK DETAILS DRAWING.

G5. DESIGN DRAWING OF ROOF ACCESS HATCH IS SHOWN AS DRG No. 24356 – 230. THE CONTRACTOR WILL REQUIRE THIS DRAWING FOR THE CONSTRUCTION OF ACCESS HATCH AND DETERMINATION OF RECESS REQUIRED AT ROOF ACCESS OPENINGS.

DESIGN STANDARDS

G6. DESIGN TO COMPLY WITH THE FOLLOWING AUSTRALIAN STANDARDS:

- AS/NZS 1170.0:2002 STRUCTURAL DESIGN ACTIONS PART 0 : GENERAL PRINCIPLES
- AS/NZS 1170.1:2002 STRUCTURAL DESIGN ACTIONS PART 1: PERMANENT, IMPOSED AND OTHER ACTIONS.
- AS/NZS 1170.2:2002 STRUCTURAL DESIGN ACTIONS PART 2: WIND ACTIONS
- AS/NZS 1170.4: 2007 STRUCTURAL DESIGN ACTIONS PART 4 EARTHQUAKE ACTIONS
- AS 3600: 2009 CONCRETE STRUCTURES
- AS 3735:2001 CONCRETE STRUCTURES FOR RETAINING LIQUIDS
- BCA: BUILDING CODE OF AUSTRALIA
- AS 1657: 2013 FIXED PLATFORMS, WALKWAYS, STAIRWAYS AND LADDERS

DESIGN LOADING

G7. ALL STRUCTURES SHALL BE DESIGNED IN ACCORDANCE WITH THE PRINCIPLES OF STRUCTURAL MECHANICS AND CONSTRUCTED TO BE CAPABLE OF SUSTAINING THE MOST ADVERSE COMBINATIONS OF LOAD TO WHICH THEY MAY BE SUBJECTED. DESIGN LOADING CASES SHALL INCLUDE FULL TANK WITH NO EXTERNAL EARTH/WATER PRESSURE AND EMPTY TANK WITH EXTERNAL EARTH/WATER PRESSURE. DESIGN SHALL BE IN ACCORDANCE WITH THE RELEVANT PROVISIONS OF THE BUILDING CODE OF AUSTRALIA AND AUSTRALIAN STANDARDS, INCLUDING:

- DEAD AND LIVE LOADS INCLUDING EARTH PRESSURES, GROUNDWATER PRESSURES AND LIQUID PRESSURES SHALL BE IN ACCORDANCE WITH AS/NZS 1170.1
- ROOF LIVE LOAD: MEDIUM VEHICULAR LOADING (10 TON) ACCORDING TO TABLE 3.1 OF AS/NZS 1170.1
- WIND LOADS TO AS/NZS1170.0:2002: AS/NZS 1170.2:2002 AND BCA
  AVERAGE RECURRENCE INTERVAL : 1000 years
- EARTHQUAKE LOADS TO AS/NZS1170.0:2002: AS/NZS 1170.4:2007 AND BCA
  AVERAGE RECURRENCE INTERVAL : 1000 years
- BUOYANCY FORCE SHALL BE RESISTED BY THE PROVISION OF BALLAST TO RESIST THE FLOATATION FORCES IN ACCORDANCE WITH AS/NZS 1170.0 SECTION 4

DESIGN DRAWING AND CERTIFICATION

G8. CONTRACTOR SHALL SUBMIT DESIGN DRAWINGS OF THE EMERGENCY STORAGE TANK. FOR APPROVAL PRIOR TO CONSTRUCTION. PROVIDE INDEPENDENT STRUCTURAL CERTIFICATION OF THE DESIGN.

DESIGN FLOOD LEVELS

G9. EMERGENCY STORAGE TANKS TO BE DESIGNED TO RESIST PRESSURES (INCLUDING BOUYANCY) FOR THE 1% AEP FLOOD LEVEL OF 4.6m AHD.

FOUNDATIONS AND FOOTINGS

F1. GROUND SLABS AND FOOTINGS SHALL BE DESIGNED APPROPRIATE TO GROUND CONDITIONS TO ENSURE STRUCTURES PROVIDE THE INTENDED FUNCTION OVER THE INTENDED DESIGN LIFE AND TO CONTROL MOVEMENTS WITHIN ACCEPTABLE LIMITS NOMINATED BY THE RELEVANT STANDARDS.

F2. GEOTECHNICAL REPORT PROVIDED IS FOR INFORMATION ONLY. THE PRINCIPAL DOES NOT REPRESENT THAT THE AVAILABLE GEOTECHNICAL INFORMATION SHOWS COMPLETELY THE EXISTING CONDITIONS AND DOES NOT WARRANT THE CORRECTNESS OF THE DESIGNATION OF ROCK AND OTHER NATURALLY OCCURRING MATERIALS SHOWN IN REPORTS, MAPS, DRAWINGS OR OTHER INFORMATION MADE AVAILABLE TO THE CONTRACTOR BY THE PRINCIPAL. THE CONTRACTOR SHALL INFORM ITSELF THOROUGHLY AND MAKE ITS OWN DEDUCTIONS AND CONCLUSIONS AS TO THE NATURE OF THE MATERIAL TO BE EXCAVATED, THE DIFFICULTY OF MAKING AND MAINTAINING THE REQUIRED EXCAVATIONS AND OF DOING OTHER WORK AFFECTED BY THE GEOLOGY OF THE SITE AND SHALL ACCEPT FULL RESPONSIBILITY THEREFORE.

F3. ENSURE EXCAVATIONS ARE STABLE AND PROTECT SURROUNDING PROPERTY AND SERVICES FROM ADVERSE EFFECTS OF GROUND WORKS. PROVIDE TEMPORARY WORKS AS REQUIRED. PROVIDE SHORING CERTIFIED BY SUITABLY QUALIFIED STRUCTURAL ENGINEER TO ALL DEEP EXCAVATIONS WHERE REQUIRED.

F4. USE SUITABLE CONSTRUCTION TECHNIQUES AND EQUIPMENT FOR BACKFILLING ADJACENT TO STRUCTURES TO PREVENT OVERSTRESS AND DAMAGE. BACKFILL EVENLY TO AVOID DIFFERENTIAL SOIL PRESSURES ON STRUCTURES. BACKFILL AGAINST STRUCTURES ONLY AFTER SPECIFIED CONCRETE STRENGTH IS ACHIEVED, AND PERMANENT SUPPORT INSTALLED WHERE APPLICABLE.

GEOTECHNICAL INSPECTION AND CERTIFICATION

F5. THE CONTRACTOR IS TO ENGAGE A GEOTECHNICAL ENGINEER TO INSPECT EXCAVATIONS FOR TANK FOUNDATIONS TO CONFIRM THAT THE REQUIRED BEARING CAPACITY IS ACHIEVED AND THE FOUNDATION IS BEARING ON SUITABLE MATERIAL.

CONCRETE

CON1. THE DESIGN AND CONSTRUCTION OF CONCRETE WORKS FOR EMERGENCY STORAGE TANK INCLUDE THE FOLLOWING:

- ROOF
- WALL
- FLOOR
- ROOF SUPPORT COLUMN (WHERE REQUIRED)

CON2. CONCRETE WORK INCLUDES ASSOCIATED FORMWORK, REINFORCEMENT, JOINTS, UNDERLAYS, MEMBRANES, WATERSTOPS AND SURFACE FINISHES AS SPECIFIED IN THE GENERAL NOTES DRAWING.

CON3. FOLLOWING NOTES OF THE GENERAL NOTES DRAWING SPECIFIES THE MINIMUM REQUIREMENTS OF CONCRETE WORKS FOR EMERGENCY STORAGE TANK.

- CONCRETE GRADE AND MIX DESIGN: C5, C6.
- CONCRETE FINISH: C44
- HYDROSTATIC TESTING: C45
- CLEAR COVER OF REINFORCEMENT: C51

WARNING
BEWARE OF UNDERGROUND SERVICES
THE LOCATION OF UNDERGROUND SERVICES ARE APPROXIMATE ONLY AND THEIR EXACT POSITION SHOULD BE PROVEN ON SITE. NO GUARANTEE IS GIVEN THAT ALL EXISTING SERVICES ARE SHOWN.

DIAL BEFORE YOU DIG www.1100.com.au

TENDER ISSUE
NOT FOR CONSTRUCTION

No.	REVISION DETAILS		
1	REISSUED FOR TENDER	RK	16.04.21
0	ISSUED FOR TENDER	CW	07.09.17

CONSULTANT DETAILS:
GHD
57 Graham Street Nowra NSW 2541
T 61 2 4424 4900 F 61 2 4424 4999
E noamail@ghd.com W www.ghd.com

CONSULTANT REFERENCE No. 24356-202

Shoalhaven Water
A Group of Shoalhaven City Council

DESIGNED: CW	DATE: 26.03.15	COMPANY: GHD	
DRAWN: JC	DATE: 16.07.15	COMPANY: GHD	
CHECKED: SR	DATE: 20.05.15	COMPANY: GHD	
APPROVED: CS	DATE: 07.09.17	COMPANY: GHD	

TITLE:
SHOALHAVEN WATER
LYREBIRD PARK NOWRA SPS2 UPGRADE

SPECIFICATION FOR EMERGENCY STORAGE TANK

SIZE	SCALE	INDEX No.	DRAWING No.	SHEET	REV No.
A1	N.T.S.		24356	202	1

Plot Date: 15/04/21 - 21:30 Cad File: N:\AU\Wollongong\Projects\23\12540351\CADD\Drawings\Lyrebird\24356-202.dwg

GENERAL

G1. READ THESE NOTES IN CONJUNCTION WITH OTHER ENGINEERING DRAWINGS AND SPECIFICATIONS, AND WITH SUCH OTHER WRITTEN INSTRUCTIONS ISSUED. IN CASE OF DISCREPANCY, PRECEDENCE IS GIVEN TO DRAWINGS, THEN NOTES, THEN SPECIFICATION.

G2. CARRY OUT WORK IN A SAFE MANNER IN ACCORDANCE WITH APPLICABLE LEGISLATION, STATUTORY REGULATIONS, BY-LAWS OR RULES. CONTRACTOR IS RESPONSIBLE FOR OCCUPATIONAL HEALTH AND SAFETY OF SITE PERSONNEL AND GENERAL PUBLIC IN ACCORDANCE WITH WORK HEALTH AND SAFETY ACT 2010, LEGISLATIVE REQUIREMENTS, ASSOCIATED REGULATIONS AND CODES OF PRACTICE, INDUSTRIAL AGREEMENTS AND ACCEPTED INDUSTRY PRACTICE.

G3. REFER DISCREPANCIES TO SUPERINTENDENT BEFORE PROCEEDING WITH WORK.

G4. NOMINATION OF PROPRIETARY ITEMS DOES NOT INDICATE EXCLUSIVE PREFERENCE, BUT INDICATES REQUIRED PROPERTIES OF ITEM. SIMILAR ALTERNATIVES HAVING REQUIRED PROPERTIES MAY BE OFFERED FOR APPROVAL. APPROVAL DOES NOT AUTHORISE A VARIATION TO THE CONTRACT. INSTALL PROPRIETARY ITEMS IN ACCORDANCE WITH MANUFACTURER'S REQUIREMENTS AND RECOMMENDATIONS.

G5. OBTAIN NECESSARY PERMITS AND APPROVALS FROM RELEVANT AUTHORITIES BEFORE COMMENCING WORK ON SITE. NOTIFY RELEVANT SERVICE AUTHORITIES BEFORE COMMENCING WORK ON SITE.

G6. GIVE TWO WORKING DAYS' (48 HOURS) NOTICE SO THAT INSPECTION MAY BE MADE OF CRITICAL STAGES OF WORK.

G7. INSPECTIONS UNDERTAKEN BY SUPERINTENDENT OR OTHERS DO NOT RELIEVE CONTRACTOR OF RESPONSIBILITY FOR COMPLIANCE WITH DRAWINGS AND SPECIFICATIONS.

G8. DO NOT OBTAIN DIMENSIONS BY SCALING FROM DRAWINGS.

G9. DIMENSIONS ARE IN MILLIMETRES, LEVELS ARE IN METRES UNO, CHAINAGES ARE IN METRES UNO.

G10. DATUM FOR LEVELS IS AHD (AUSTRALIAN HEIGHT DATUM).

G11. HAVE SURVEY AND SETTING OUT UNDERTAKEN BY A REGISTERED SURVEYOR.

G12. VERIFY ON SITE SETTING OUT DIMENSIONS AND EXISTING MEMBER SIZES SHOWN ON DRAWINGS BEFORE SHOP DRAWINGS, CONSTRUCTION AND FABRICATION IS COMMENCED. EXISTING STRUCTURES SHOWN ON DRAWINGS ARE IN APPROXIMATE LOCATIONS ONLY.

G13. TAKE CARE OF HAZARDS ASSOCIATED WITH BURIED, CONCEALED OR OVERHEAD SERVICES. TAKE PRECAUTIONS UNDERTAKE EXPLORATION TO ESTABLISH LOCATION OF AND PROTECT EXISTING SERVICES AT SITE. SERVICES SHOWN ON DRAWINGS ARE IN APPROXIMATE LOCATIONS ONLY. SERVICES OTHER THAN THOSE SHOWN MAY EXIST ON SITE. MARK LOCATIONS OF SERVICES CLEARLY ON SITE, AND ON AS-BUILT DRAWINGS. HAND EXCAVATE WITHIN ONE METRE OF IN-GROUND SERVICES.

G14. DISPOSE OF SURPLUS MATERIAL OFF SITE IN ACCORDANCE WITH LOCAL AUTHORITY WASTE REGULATIONS..

G15. IMPLEMENT SOIL AND WATER MANAGEMENT PROCEDURES TO AVOID EROSION, CONTAMINATION AND SEDIMENTATION OF SITE, SURROUNDING AREAS AND DRAINAGE SYSTEMS.

G16. WORKMANSHIP AND MATERIALS TO COMPLY WITH AUSTRALIAN STANDARDS, BUILDING CODE OF AUSTRALIA (BCA) AND BY-LAWS AND ORDINANCES OF RELEVANT BUILDING AUTHORITIES. ALL STANDARDS REFERRED TO ARE THOSE CURRENT (AS AMENDED) AT COMMENCEMENT OF CONTRACT.

G17. PROVIDE FOR TEMPORARY SUPPORT OF ADJOINING ELEMENTS DURING CONSTRUCTION.

G18. MAKE GOOD ANY DAMAGE TO EXISTING ELEMENTS AT COMPLETION OF WORKS.

G19. WHERE NEW WORK ABUTS EXISTING, PROVIDE SMOOTH TRANSITION FREE OF ABRUPT CHANGES.

G20. HAVE TESTING PERFORMED BY AN INDEPENDENT NATA (NATIONAL ASSOCIATION OF TESTING AUTHORITIES) ACCREDITED AUTHORITY, AND PROVIDE TEST REPORTS TO SUPERINTENDENT.

G21. SEPARATE METALS FROM INCOMPATIBLE MATERIALS (eg STAINLESS STEEL, GALVANIZED STEEL, UNGALVANIZED STEEL AND TREATED TIMBER etc) BY CONCEALED LAYERS OF SUITABLE INERT MATERIALS OF SUITABLE THICKNESSES. USE PLASTIC SLEEVES AND WASHERS FOR BOLTS, etc.

G22. KEEP ON SITE A COMPLETE SET OF CONTRACT DOCUMENTS (INCLUDING DRAWINGS AND SPECIFICATIONS) AND SITE INSTRUCTIONS.

DESIGN ASSUMPTIONS

G23. DESIGN LIFE = 50 YEARS.

G24. LIVE LOAD ON ROOF = 2.5 kPa
SURCHARGE LOAD ON WALL OF TANK = 5 kPa
UPLIFT CHECK: GROUNDWATER AT RL = 3.45m AHD

G25. SOIL PROPERTIES :
DENSITY = 18 kN/m3
COEFFICIENT OF EARTH PRESSURE AT REST = 0.5

TEMPORARY WORKS

G26. THESE DRAWINGS DO NOT DETAIL TEMPORARY WORKS. CONSTRUCTION METHODS AND TEMPORARY WORKS ARE RESPONSIBILITY OF THE CONTRACTOR.

G27. PROVIDE SCAFFOLDING, BARRIERS, FALL RESTRAINT, HAND-MID RAILS AND TOE BOARDS FOR WORK AT HEIGHT. ERECT ACCESS STAIRS AT EARLIEST OPPORTUNITY TO REDUCE OPEN SHAFT HAZARDS AND FACILITATE ACCESS. MAINTAIN SAFETY MESH AND BARRIERS TO ALL OPENINGS AND ELEVATED EDGES.

G28. MAINTAIN STRUCTURE IN A STABLE CONDITION DURING CONSTRUCTION AND PROVIDE TEMPORARY BRACING AND/OR SUPPORT AS REQUIRED.

FOUNDATIONS AND FOOTINGS

R1. REFER TO GEOTECHNICAL INVESTIGATION REPORT REGARDING FOUNDATION.

R2. ENSURE EXCAVATIONS ARE STABLE AND PROTECT PROPERTY AND SERVICES FROM ADVERSE EFFECTS OF GROUND WORKS. PROVIDE TEMPORARY WORKS AS REQUIRED. PROVIDE SHORING CERTIFIED BY SUITABLY QUALIFIED STRUCTURAL ENGINEER TO ALL DEEP EXCAVATIONS WHERE REQUIRED.

R3. USE SUITABLE CONSTRUCTION TECHNIQUES AND EQUIPMENT FOR BACKFILLING ADJACENT TO STRUCTURES TO PREVENT OVERSTRESS AND DAMAGE. BACKFILL EVENLY TO AVOID DIFFERENTIAL SOIL PRESSURES ON STRUCTURES. BACKFILL AGAINST STRUCTURES ONLY AFTER SPECIFIED CONCRETE STRENGTH IS ACHIEVED, AND PERMANENT SUPPORT INSTALLED WHERE APPLICABLE.

CONCRETE

CONCRETE MIX

C1. WORKMANSHIP AND MATERIALS TO COMPLY WITH AS3600, AS2870, AS3610, AS1379, AS1478, AS3582, AS5100.5 AND AS3972. FOR LIQUID RETAINING STRUCTURES ALSO COMPLY WITH AS3735.

C2. WET CONCRETE TO BE UNIFORM, HOMOGENEOUS, COHESIVE AND ABLE TO WORK READILY INTO CORNERS AND AROUND REINFORCEMENT COMPLETELY FILLING FORMWORK WITHOUT SEGREGATION, EXCESS FREE WATER ON SURFACE, LOSS OF MATERIAL OR CONTAMINATION.
CONCRETE TO HAVE GOOD DIMENSIONAL STABILITY AND ABLE TO RESIST PLASTIC SETTLEMENT CRACKING, THERMAL CRACKING AND SHRINKAGE CRACKING.

C3. FINISHED CONCRETE TO BE A DURABLE, DENSE, HOMOGENEOUS MASS COMPLETELY FILLING FORMWORK, EMBEDDING REINFORCEMENT AND TENDONS, AND FREE OF STONE POCKETS, OF UNIFORM COLOUR AND TEXTURE, WITH LOW PERMEABILITY AND ADEQUATE BUT NOT EXCESSIVE STRENGTH FOR GRADE.

C4. WHERE CONCRETE IS USED FOR EMERGENCY STORAGE TANK THE CONTRACTOR IS RESPONSIBLE FOR DETERMINING THE CONCRETE MIX DESIGN, VERIFICATION, LIMITING CONCRETE CRACKING TO WITHIN RECOMMENDATIONS MADE IN AS3735, PLACEMENT AND ALL OTHER ASSOCIATED ELEMENTS. THE CONCRETE MIX DESIGN IS TO BE BASED ON DESIGN LIFE OF 50 YRS AND EXPOSURE CLASSIFICATION D AT THE LIQUID FACE OF THE EMERGENCY STORAGE TANK

C5. WHERE CONCRETE IS USED FOR EMERGENCY STORAGE TANK THE CONTRACTOR IS RESPONSIBLE FOR DETERMINING THE CONCRETE MIX DESIGN, VERIFICATION, LIMITING CONCRETE CRACKING TO WITHIN RECOMMENDATIONS MADE IN AS3735, PLACEMENT AND ALL OTHER ASSOCIATED ITEMS.

C6. UNO MINIMUM QUALITY OF CONCRETE ELEMENTS TO BE AS FOLLOWS:

STRUCTURAL ELEMENT	WET WELL & VALVE PIT	BLINDING & MASS CONCRETE
STRENGTH GRADE (MPa)	S40	N15
MINIMUM CHARACTERISTIC STRENGTH AT 28 DAYS (MPa)	40	15
MAX. 56 DAY DRYING SHRINKAGE	600 x 10^{-6}	-

A MINIMUM OF THREE WEEKS PRIOR TO COMMENCEMENT OF STRUCTURAL CONCRETE WORK, THE CONTRACTOR SHALL SUBMIT DETAILS OF CONCRETE MIX, TEST RESULTS CONDUCTED BY A CERTIFICATION BODY TO THE SUPERINTENDENT FOR APPROVAL.

C7. SUPPLEMENTARY CEMENTITIOUS MATERIALS INCLUDE SILICA FUME, FLY ASH, AND GROUND GRANULATED BLAST FURNACE SLAG (GGBFS OR SLAG).

C8. ADMIXTURES TO COMPLY WITH AS1478. ADMIXTURES MUST NOT REDUCE STRENGTH OF CONCRETE BELOW SPECIFIED VALUE. USE ADMIXTURES IN ACCORDANCE WITH MANUFACTURER'S RECOMMENDATIONS. CONCRETE ADDITIVES SHALL NOT ENHANCE CORROSION OF REINFORCEMENT, NOR BE DETRIMENTAL TO CONCRETE OR STEEL DURING EXPECTED LIFE OF STRUCTURE. DO NOT USE CHEMICAL ADMIXTURES OR OTHER MATERIALS WITHOUT SUPERINTENDENT'S WRITTEN APPROVAL.

C9. S40 GRADE CONCRETE IS REQUIRED TO HAVE HIGH DURABILITY.
PROVIDE CONCRETE WITH:
- AN AVERAGE COMPRESSIVE STRENGTH AT COMPLETION OF CURING NOT LESS THAN 75% OF SPECIFIED f'c.
- A TOTAL REACTIVE ALKALI CONTENT NOT GREATER THAN 3.0 kg/m3 Na2O (EQUIVALENT).
- PLACE CONCRETE IN LAYERS LESS THAN 300 mm THICK AND VIBRATE EACH LAYER BEFORE PLACING NEXT.

C10. S40 GRADE CONCRETE REQUIREMENTS:
- DO NOT USE METAL INSERTS WITHIN COVER CONCRETE INCLUDING METAL BAR CHAIRS.
- DO NOT ALLOW CONCRETE TO FALL VERTICALLY WHEN PLACING, OR TO ENTRAP AIR IN ANY OTHER WAY.
- PREVENT EVAPORATION OF WATER FROM CONCRETE SURFACES IMMEDIATELY AFTER LAYING.
- MOIST CURE CONCRETE FOR A MINIMUM OF SEVEN DAYS.

C11. DO NOT ADD WATER TO CONCRETE AFTER TRUCK HAS LEFT BATCHING PLANT.

C12. MIX CONCRETE TO ENSURE UNIFORM DISTRIBUTION OF CONSTITUENTS.

CONCRETE TESTING

C13. TEST SLUMP OF EACH BATCH OF CONCRETE DELIVERED BEFORE PLACING CONCRETE FROM THAT DELIVERY. SLUMP MEASURED TO BE NO GREATER THAN TARGET SLUMP WITHIN TOLERANCES GIVEN IN AS1379 CLAUSE 5.2.3.

C14. CARRY OUT PROJECT ASSESSMENT OF CONCRETE TO AS1379 CLAUSE 6.4 AND 6.5. TAKE SAMPLES AT PROJECT SITE AT POINT OF DISCHARGE FROM AGITATOR. SPREAD SAMPLING EVENLY THROUGH POUR. SAMPLE CONCRETE FOR PROJECT ASSESSMENT CONCURRENTLY WITH EACH SAMPLE TAKEN FOR PRODUCTION ASSESSMENT AT PROJECT FOR EACH CONCRETE DESIGN MIX TAKE ONE SAMPLE FROM EACH 25 CUBIC METRES OF CONCRETE DELIVERED PER DAY, NOT LESS THAN FIVE SAMPLES TOTAL FOR EACH MIX DESIGN. EACH SAMPLE TO COMPRISE FOUR CYLINDERS: TEST TWO AT 7 DAYS AND TWO AT 28 DAYS.

C15. CARRY OUT DRYING SHRINKAGE TESTING TO AS1012.13. FOR EACH CONCRETE DESIGN MIX TAKE ONE SAMPLE EVERY THREE MONTHS, OR FOR EVERY 200 m3 OF CONCRETE PLACED, A MINIMUM OF ONE SAMPLE. EACH SAMPLE TO COMPRISE THREE SPECIMENS. SAMPLE CONCRETE AT PROJECT SITE, DIRECTLY FROM DELIVERY VEHICLE. BASE ASSESSMENT ON AVERAGE OF THREE TEST RESULTS.

C16. CONCRETE TESTING TO BE BY AN APPROVED NATA REGISTERED LABORATORY.

FORMWORK

C17. RESPONSIBILITY FOR DESIGN, CERTIFICATION, CONSTRUCTION AND PERFORMANCE OF FORMWORK AND FALSEWORK LIES WITH CONTRACTOR. CERTIFICATION IS TO BE DONE BY A CHARTERED PROFESSIONAL ENGINEER OF THE INSTITUTION OF ENGINEERS AUSTRALIA WITH RELEVANT EXPERIENCE IN THE DESIGN OF FORMWORK.

C18. DO NOT SUPPORT OR RESTRAIN FORMWORK ON PERMANENT WORKS WITHOUT SUPERINTENDENT'S WRITTEN APPROVAL.

C19. CONSTRUCT FORMWORK TO COMPLY WITH AS3610 AND CLAUSE 17.6 OF AS3600 WHERE THIS IS MORE STRINGENT SO CONCRETE WILL HAVE DIMENSIONS, SHAPE, LOCATION AND FINISH SPECIFIED. PROVIDE OPENINGS OR REMOVABLE PANELS FOR INSPECTION AND CLEANING. APPLY RELEASE AGENT COMPATIBLE WITH CONTACT SURFACES TO INTERIOR OF FORMWORK. SEAL JOINTS BETWEEN FORMWORK PANELS, AND TO HARDENED CONCRETE WITH A FLEXIBLE RUBBER STRIP. SET OUT FORMWORK TO GIVE A REGULAR ARRANGEMENT OF PANELS, JOINTS, BOLT HOLES AND SIMILAR VISIBLE ELEMENTS IN FORMED SURFACE.

C20. DO NOT USE FORMWORK HARDWARE THAT FORMS A COMPLETE HOLE THROUGH CONCRETE ELEMENTS. DO NOT USE REINFORCEMENT TO SUPPORT FORMWORK.

C21. PROVIDE HOLES IN REBATE FORMERS, etc, AS REQUIRED TO PREVENT AIR ENTRAPMENT.

C22. DO NOT STRIP FORMWORK UNTIL CONCRETE IS HARDENED SUFFICIENTLY TO WITHSTAND MOVEMENT AND FORM REMOVAL WITHOUT DAMAGE.

C23. STRIP FORMWORK TO AS3600 CLAUSE 17.6. REMOVE FORM TIE BOLTS WITHOUT DAMAGING CONCRETE. PARTS OF BOLTS LEFT IN CONCRETE MUST NOT INTRUDE INTO COVER CONCRETE. FLUSH FILL HOLES USING PRE-MIXED NONSHRINK CEMENTITIOUS REPAIR MORTAR MATCHING CONCRETE SURFACE COLOUR, STRENGTH AND DURABILITY AND ADEQUATE BOND.

PLACING OF CONCRETE

C24. CONSTRUCTION TOLERANCES TO BE TO AS3610.

C25. REMOVE FREE WATER, DUST AND DEBRIS, STAINS etc FROM FORMS, EXCAVATIONS etc BEFORE PLACING CONCRETE. IN HOT CONDITIONS DAMPEN FORMWORK AND/OR SUB-GRADE BEFORE PLACING CONCRETE.

C26. ELAPSED TIME BETWEEN WETTING OF MIX AND DISCHARGE OF CONCRETE AT SITE MUST BE AS SHORT AS POSSIBLE, AND COMPLY WITH THE FOLLOWING.

CONCRETE TEMPERATURE AT TIME OF DISCHARGE (°C)	MAXIMUM ELAPSED TIME (HOURS)
10-24	2.00
24-27	1.50
27-30	1.00
30-32	0.75

C27. USE PLACEMENT METHODS THAT WILL MINIMISE PLASTIC SETTLEMENT AND SHRINKAGE CRACKING. LIMIT VERTICAL FREE FALL BY USE OF CHUTES, etc. KEEP CHUTES VERTICAL, FULL AND IMMERSED IN CONCRETE. PLACE CONCRETE IN LAYERS AND BLEND SUCCEEDING LAYERS BY COMPACTION. MAINTAIN CONCRETE EDGE IN A PLASTIC STATE. PROPERLY COMPACT CONCRETE USING MECHANICAL VIBRATORS (AND HAND METHODS IF REQUIRED) TO REMOVE AIR BUBBLES AND GIVE MAXIMUM COMPACTION WITHOUT SEGREGATION OF CONCRETE. TAKE CARE TO AVOID CONTACT BETWEEN VIBRATORS AND PARTIALLY HARDENED CONCRETE, FORMWORK OR REINFORCEMENT. DO NOT USE VIBRATORS TO MOVE CONCRETE ALONG FORMS.

C28. OBTAIN SUPERINTENDENT'S WRITTEN APPROVAL OF PLACEMENT METHODS FOR CONCRETE ELEMENTS GREATER THAN 1500 mm HEIGHT.

C29. KEEP ON SITE A LOG BOOK RECORDING EACH PLACEMENT OF CONCRETE INCLUDING DATE, CLIMATIC CONDITIONS, PORTION OF WORK, SPECIFIED GRADE AND SOURCE OF CONCRETE, DELIVERY DOCKET DATA, METHODS OF PLACEMENT AND COMPACTION, PROJECT ASSESSMENT CARRIED OUT, SLUMP MEASUREMENTS, VOLUME AND OTHER NOTABLE MATTERS.

C30. IN COLD WEATHER MAINTAIN TEMPERATURE OF FRESHLY MIXED CONCRETE WITHIN LIMITS SHOWN BELOW. "OUTDOOR" AIR TEMPERATURE IS AIR TEMPERATURE AT TIME OF MIXING, OR PREDICTED OR LIKELY AIR TEMPERATURE DURING NEXT 48 HOURS. BEFORE AND WHILE PLACING CONCRETE MAINTAIN TEMPERATURE OF FORMWORK AND REINFORCEMENT AT > 5°C. DO NOT USE CALCIUM CHLORIDE, SALTS, CHEMICALS OR OTHER MATERIAL IN MIX TO LOWER THE FREEZING POINT OF CONCRETE. DO NOT ALLOW FROZEN MATERIALS TO ENTER MIXER. DO NOT USE HIGH ALUMINA CEMENT.

C31. KEEP FORMS, MATERIALS, EQUIPMENT IN CONTACT WITH CONCRETE FREE OF FROST AND ICE. HEAT CONCRETE MATERIALS (OTHER THAN CEMENT) TO MINIMUM TEMPERATURE NECESSARY TO ENSURE TEMPERATURE OF PLACED CONCRETE IS WITHIN LIMITS SPECIFIED. MAXIMUM WATER TEMPERATURE: 60°C WHEN PLACED IN MIXER.

OUTDOOR AIR TEMPERATURE	TEMPERATURE OF CONCRETE	
	MINIMUM	MAXIMUM
>5°C	10°C	32°C
<5°C	18°C	32°C

C32. IN HOT WEATHER PREVENT PREMATURE STIFFENING OF FRESH CONCRETE; REDUCE WATER ABSORPTION AND EVAPORATION LOSSES. MIX, TRANSPORT, PLACE AND COMPACT CONCRETE AS QUICKLY AS POSSIBLE. DURING PLACEMENT TEMPERATURE OF CONCRETE MUST NOT EXCEED TEMPERATURES BELOW:

CONCRETE ELEMENT	TEMPERATURE LIMIT
UNREINFORCED CONCRETE IN SECTIONS ≥ 1 METRE EACH DIMENSION,	27°C
CONCRETE f'c ≥ 40 MPa IN SECTIONS ≥ 500 mm THICKNESS	27°C
CONCRETE IN FOOTINGS, BEAMS, COLUMNS, WALLS AND SLABS f'c 32 MPa	32°C
ELSEWHERE	32°C

DO NOT MIX CONCRETE WHEN SURROUNDING OUTDOOR SHADE TEMPERATURE ≥ 38°C. MAINTAIN TEMPERATURE OF FORMWORK AND REINFORCEMENT AT ≤ 32°C BEFORE AND DURING PLACING. MAINTAIN SPECIFIED TEMPERATURE OF PLACED CONCRETE BY:
- COOL CONCRETE USING LIQUID NITROGEN INJECTION BEFORE PLACING, OR
- COVER CONTAINER IN WHICH CONCRETE IS TRANSPORTED TO FORMS, OR
- SPRAY COARSE AGGREGATE USING COLD WATER, OR
- USE CHILLED MIXING WATER.

C33. PROTECT FRESH CONCRETE FROM PREMATURE DRYING - PARTICULARLY IN HOT, WINDY OR DRY (LOW HUMIDITY) CONDITIONS, EXCESSIVELY HOT OR COLD TEMPERATURES, RAIN, etc. PROVIDE WIND BREAKS. MAINTAIN CONCRETE AT A REASONABLY CONSTANT TEMPERATURE WITH MINIMUM MOISTURE LOSS FOR CURING PERIOD.

C34. FOR CONCRETE WITH WATER:CEMENT RATIO LESS THAN 0.5, IN HOT, WINDY OR DRY (LOW HUMIDITY) CONDITIONS SPRAY EXPOSED SURFACES OF FRESH CONCRETE WITH FOG SPRAY APPLICATION OF ALIPHATIC ALCOHOL RETARDANT IMMEDIATELY AFTER PLACEMENT TO REDUCE RISK OF PLASTIC SHRINKAGE CRACKING. IN SEVERE CLIMATIC CONDITIONS CONSIDER REVIBRATING CONCRETE BEFORE IT REACHES INITIAL SET.

C35. COMMENCE CURING OF CONCRETE TO AS3600 AS SOON AS POSSIBLE AFTER PLACING AND FINISHING OR STRIPPING, AND WITHIN ONE HOUR. ENSURE EXPOSED SURFACES ARE NOT STAINED. ACCEPTABLE METHODS OF CURING INCLUDE:
- RETENTION OF FORMWORK
- PONDING OR CONTINUOUS SPRINKLING WITH WATER (MOIST CURING)
- AN IMPERMEABLE MEMBRANE (USE WHITE OR LIGHT COLOURED PLASTIC IN HOT CONDITIONS). SEAL AROUND EDGES
- AN ABSORPTIVE COVER KEPT CONTINUOUSLY WET AND COVERED BY IMPERMEABLE MEMBRANE
- STEAM CURING
- AN APPROVED CURING COMPOUND (FOR NORMAL CLASS CONCRETE ONLY) PROVIDE:
  - EFFICIENCY INDEX
  - CERTIFIED TEST RESULTS FOR WATER RETENTION TO AS3799 APPENDIX B
  - EVIDENCE THAT AN ACCEPTABLE FINAL SURFACE COLOUR WILL BE OBTAINED
  - EVIDENCE OF COMPATIBILITY WITH CONCRETE AND APPLIED FINISHES (IF ANY)
  - METHODS OF OBTAINING REQUIRED ADHESION FOR TOPPINGS, RENDER etc.
  - UNIFORM CONTINUOUS FLEXIBLE COATING WITHOUT VISIBLE BREAKS OR PINHOLES, WHICH REMAINS UNBROKEN FOR AT LEAST THE CURING PERIOD AFTER APPLICATION.

C36. DO NOT USE WAX-BASED OR CHLORINATED RUBBER-BASED CURING COMPOUNDS ON SURFACES FORMING SUBSTRATES TO APPLIED FINISHES, CONCRETE TOPPINGS AND CEMENT BASED RENDER.

C37. CURE CONTINUOUSLY UNTIL NUMBER OF DAYS DURING WHICH AIR TEMPERATURE IS ABOVE 10°C TOTALS:
- 3 DAYS FOR EXPOSURES CLASSIFICATION A1 AND A2
- 7 DAYS FOR EXPOSURE CLASSIFICATION B1, B2 AND C.

TENDER ISSUE
NOT FOR CONSTRUCTION

No.	REVISION DETAILS		
1	REISSUED FOR TENDER	RK	16.04.21
0	ISSUED FOR TENDER	CW	07.09.17

CONSULTANT DETAILS:
GHD
57 Graham Street Nowra NSW 2541
T 61 2 4424 4900 F 61 2 4424 4999
E noamail@ghd.com W www.ghd.com

CONSULTANT REFERENCE No. 24356-203

Shoalhaven Water
A Group of Shoalhaven City Council

DESIGNED: AD	DATE: 29.06.15	COMPANY: GHD	
DRAWN: HA	DATE: 14.07.15	COMPANY: GHD	
CHECKED: SR	DATE: 20.05.15	COMPANY: GHD	
APPROVED: CS	DATE: 07.09.17	COMPANY: GHD	

TITLE:
SHOALHAVEN WATER
LYREBIRD PARK NOWRA SPS2 UPGRADE

STRUCTURAL NOTES
SHEET 1 OF 2

SIZE	SCALE	INDEX No.	DRAWING No.	SHEET	REV No.
A1	N.T.S.		24356	203	1

Plot Date: 15/04/21 - 21:29 Cad File: C:\CAD\temp\AcPublish_864796\24356-203.dwg

C38. PREVENT RAPID DRYING OUT AT END OF CURING PERIOD.
C39. PROVIDE EXPOSED EDGES AND RE-ENTRANT CORNERS WITH 45 DEGREES x 25 mm CHAMFERS OR FILLETS UNO
C40. DO NOT MAKE HOLES, PENETRATIONS, RECESSES, CHASES, NOR EMBED PIPES (OTHER THAN THOSE SHOWN ON STRUCTURAL DRAWINGS) WITHOUT APPROVAL OF SUPERINTENDENT. DO NOT PLACE CONDUITS, PIPES ETC WITHIN COVER CONCRETE. LOCATE CONDUITS, PIPES ETC ONLY IN MIDDLE THIRD OF SLAB OR BEAM DEPTH AND BETWEEN REINFORCEMENT LAYERS, AND SPACED AT 3 x DIAMETER CENTRES MINIMUM. DO NOT CUT REINFORCEMENT AT PENETRATIONS WITHOUT APPROVAL
C41. PROVIDE DRIP GROOVES IN SOFFIT OF BEAMS AND SLABS AT EXTERNAL PERIMETER OF STRUCTURES. ENSURE COVER TO REINFORCEMENT IS ACHIEVED.
C42. REMOVE PROPS AND FORMWORK FOR BEAMS AND SLABS AND ENSURE CONCRETE HAS GAINED ADEQUATE STRENGTH BEFORE CONSTRUCTING WALLS OR PLACING OTHER PERMANENT LOADING ON WORK.
C43. WHERE CONCRETE BEARS ON LOAD BEARING MASONRY AND BRICKWORK, TROWEL SMOOTH AND FLAT A 5mm THICK LAYER OF MORTAR AND SEPARATE CONCRETE THERE FROM WITH TWO LAYERS OF "SUPER ALCOR".
C44. FINISH CONCRETE SURFACES TO AS3610 AND AS SHOWN BELOW:
FORMED SURFACE FINISH:
(a) EXPOSED SURFACES (EXPOSED TO LIQUID AND AIR) - CLASS 2 TO AS3610.
(b) BURIED SURFACES – CLASS 3 TO AS3610.
UNFORMED SURFACE FINISH:
(a) WATER RETAINING STRUCTURES : STEEL TROWEL FINISH
(b) OTHER STRUCTURES: WOOD FLOAT FINISH.
C45. ALL LIQUID RETAINING STRUCTURES SHALL BE TESTED FOR WATER TIGHTNESS IN ACCORDANCE WITH CLAUSE 7.3 OF AS3735. TESTING SHALL TAKE PLACE AND SUCCESSFULLY COMPLETED PRIOR TO BACKFILL AROUND STRUCTURES AND PRIOR TO PLACING CONCRETE BENCHING OR MORTAR TOPPING.

JOINTS

C46. FORM CONSTRUCTION JOINTS AND USE ONLY WHERE SHOWN OR WHERE APPROVED BY CONTRACTOR'S DESIGNER. CONSTRUCTION JOINTS IN SLABS TO BE VERTICAL, STRAIGHT AND TRUE. TO ACHIEVE ADEQUATE BOND ENSURE ENTIRE SURFACE IS CLEAN, FREE OF LAITANCE AND BLEMISHES, AND INTENTIONALLY ROUGHENED TO A FULL AMPLITUDE OF NOT LESS THAN 5 mm WITH COARSE AGGREGATE EXPOSED. UNLESS NOTED OTHERWISE, COAT EXISTING CONCRETE WITH NEAT CEMENT SLURRY JUST BEFORE PLACING ADJACENT FRESH CONCRETE SO THAT CEMENT SLURRY REMAINS PLASTIC.
C47. PROVIDE JOINTING MATERIALS COMPATIBLE WHEN USED TOGETHER, AND NON-STAINING TO CONCRETE IN VISIBLE LOCATIONS.
C48. INSTALL HYDROPHILIC WATERSTOPS ONTO SMOOTH CONCRETE SURFACE STRICTLY IN ACCORDANCE WITH MANUFACTURER'S WRITTEN REQUIREMENTS. DO NOT SCABBLE CONCRETE BENEATH THESE WATERSTOPS.
C49. DO NOT INSTALL SEALANTS IF EXPECTED MAXIMUM DAILY TEMPERATURE EXCEEDS 30 DEGREES C. ENSURE RECESSES ARE CLEAN AND DRY PRIOR TO INSTALLING FILLERS OR SEALANTS, AND PREPARE IN ACCORDANCE WITH MANUFACTURER'S RECOMMENDATIONS. TOLERANCE ON SEALANT WIDTHS +5, -0 mm.

REINFORCEMENT COVER

C50. COVER IS CLEAR DISTANCE BETWEEN ANY REINFORCEMENT (INCLUDING LIGATURES, TIE WIRE ETC) AND OUTSIDE SURFACE OF STRUCTURAL CONCRETE.
C51. MINIMUM CLEAR COVER OF REINFORCEMENT WILL BE AS FOLLOWS :
LIQUID FACE OF WET WELL= 75 mm
EXTERNAL FACES IN CONTACT WITH GROUND = 65mm
ALL OTHER FACES = 50mm

REINFORCEMENT

R4. SYMBOLS ON DRAWINGS FOR GRADE AND TYPE OF REINFORCEMENT ARE AS FOLLOWS:
- R: STRUCTURAL GRADE 250 PLAIN ROUND BAR TO AS/NZS4671
- N: HOT ROLLED GRADE 500 DEFORMED (RIBBED) BAR DUCTILITY CLASS N TO AS/NZS4671
- L: HOT ROLLED GRADE 500 DEFORMED BAR DUCTILITY CLASS L TO AS/NZS4671
- SL: HARD DRAWN WIRE GRADE 500 SQUARE MESH DUCTILITY CLASS L TO AS/NZS4671
- RL: HARD DRAWN WIRE GRADE 500 RECTANGULAR MESH DUCTILITY CLASS L TO AS/NZS4671
- TM: HARD DRAWN STEEL GRADE 500 TRENCH MESH DUCTILITY CLASS L TO AS/NZS4671
- W: GRADE 500 STEEL REINFORCING WIRE TO AS/NZS4671

R5. PROVIDE ACRS (AUSTRALIAN CERTIFICATION AUTHORITY FOR REINFORCING STEEL LTD) CERTIFICATION OF COMPLIANCE WITH AS/NZS4671 FOR ALL REINFORCEMENT. PROVIDE CERTIFICATION OF COMPLIANCE WITH AS1311 FOR ALL PRESTRESSING TENDONS.
R6. PROVIDE DOCUMENTATION TO SHOW THAT REINFORCEMENT SUPPLIER AND MILL COMPLIES WITH AS/NZS4671.
R7. REINFORCEMENT MUST HAVE UNIQUE MARKS TO IDENTIFY SUPPLIER.
R8. DO NOT USE LOW DUCTILITY REINFORCEMENT (GRADE L) UNO.
R9. USE MESH SUPPLIED IN FLAT SHEETS UNLESS APPROVED OTHERWISE.
R10. REINFORCEMENT TO BE CLEAN, FREE OF LOOSE MILL SCALE, RUST, OIL, GREASE, MUD OR OTHER MATERIAL THAT MIGHT REDUCE BOND BETWEEN REINFORCEMENT AND CONCRETE.
R11. SUBMIT PROPOSAL FOR CUTTING OR DISPLACING REINFORCEMENT
R12. DESIGNATION OF REINFORCEMENT BARS IS AS SHOWN:
eg. 17 N20 - 350 EF
- 17: DENOTES No OF BARS AND TYPE IN GROUP
- N: DENOTES BAR GRADE AND DUCTILITY CLASS
- 20: DENOTES NOMINAL BAR DIAMETER IN mm
- 350: DENOTES SPACING IN mm
- EF: DENOTES LOCATION

R13. TO MINIMIZE TRIP HAZARDS CONSIDER MAXIMUM REINFORCEMENT BAR SPACING FOR TRAFFICABLE AREAS PRIOR TO CASTING CONCRETE OF 200mm. ALTERNATIVELY PROVIDE SL82 ADDITIONAL IF MAIN REINFORCEMENT SPACING IS GREATER THAN 200mm.
R14. FOLLOWING ABBREVIATIONS APPLY TO LOCATION OF REINFORCEMENT:
EW: EACH WAY FF: FAR FACE BB: BOTTOM BOTTOM (LAID FIRST)
EF: EACH FACE B: BOTTOM TT: TOP TOP (LAID LAST)
NF: NEAR FACE T: TOP C OR CP: CENTRALLY PLACED
R15. PROVIDE STANDARD COGS AND HOOKS TO AS3600. TERMINATE ENDS OF COLUMN AND BEAM LIGATURES IN A HOOK OF AT LEAST 135 DEGREES. PROVIDE FIRST LIGATURE WITHIN 50mm OF FACE OF SUPPORT.
R16. PROVIDE ONE CONTINUOUS BAR PARALLEL TO (WITHIN 75mm OF) CONCRETE EDGES, INCLUDING CONSTRUCTION JOINTS UNO.
R17. REINFORCEMENT IS REPRESENTED DIAGRAMMATICALLY AND IS NOT NECESSARILY IN TRUE PROJECTION. SET REINFORCEMENT OUT AT EQUAL CENTRES IF SPACING IS NOT NOMINATED.
R18. CAP STARTER BARS AND OTHER REINFORCEMENT TO REDUCE RISK OF IMPALEMENT AND LACERATIONS.
R19. ENSURE ALL LAID REINFORCING BARS ARE RESTRAINED BEFORE STOPPING WORK TO PREVENT BARS ROLLING UNDERFOOT.
R20. SECURE REINFORCEMENT IN POSITION AGAINST DISPLACEMENT AND MAINTAIN SPECIFIED CLEAR CONCRETE COVER TO REINFORCEMENT (INCLUDING FITMENTS) BY APPROVED CHAIRS, SPACERS, LIGATURES OR TIES AT 800mm MAXIMUM CENTRES EACH WAY UNO. PROVIDE ADEQUATE SUPPORT TO PREVENT DISPLACEMENT OF REINFORCEMENT BY WORKMEN OR EQUIPMENT DURING CONCRETE PLACEMENT.
R21. SECURELY TIE REINFORCEMENT WITH WIRE TIES. TURN ENDS OF TIE WIRES INTO CONCRETE, CLEAR OF COVER ZONE.
R22. TIE BUNDLED BARS TOGETHER SO THEY ARE IN CLOSEST POSSIBLE CONTACT WITH 2.5mm DIAMETER WIRE AT CENTRES LESS THAN 24 TIMES DIAMETER OF SMALLEST BAR IN BUNDLE.
R23. FOR BEAMS, TIE STIRRUPS TO BARS IN EACH CORNER OF EACH STIRRUP. FIX OTHER LONGITUDINAL BARS TO STIRRUPS AT 1000 MAXIMUM CENTRES.
R24. FOR EXTERNAL OR CORROSIVE APPLICATIONS USE HOP DIP GALVANIZED TIE WIRES.
R25. SUPPORT REINFORCEMENT ON PROPRIETARY CONCRETE, METAL OR PLASTIC SUPPORTS ADEQUATE TO WITHSTAND CONSTRUCTION AND TRAFFIC LOADS AND MAINTAIN DURABILITY OF FINISHED CONCRETE STRUCTURE. FOR CONCRETE SURFACES WITH B2 EXPOSURE CLASSIFICATION OR GREATER, ONLY USE PROPRIETARY HIGH STRENGTH FIBRE REINFORCED CEMENT SPACER BLOCKS OR SUPPORTS.
R26. DO NOT PLACE OR MOVE REINFORCEMENT DURING OR AFTER CONCRETE PLACEMENT.
R27. ENSURE EMBEDDED ITEMS (INSERTS, THREADED SOCKETS, FERRULES, BOLTS, DISSIMILAR METAL ITEMS, ETC) IN COVER CONCRETE OR EXPOSED TO AIR ARE NOT IN CONTACT WITH REINFORCEMENT. PROVIDE ISOLATION BETWEEN DISSIMILAR METALS, AND BETWEEN REINFORCEMENT AND EXPOSED ITEMS.
R28. SPLICE REINFORCEMENT ONLY AT LOCATIONS SHOWN ON DRAWINGS OR AS APPROVED BY SUPERINTENDENT. STAGGER LAPS WHERE POSSIBLE. LAPPED SPLICE LENGTHS TO COMPLY WITH AS3600. CLEAR SPACING BETWEEN LAPPED BARS TO BE LESS THAN THREE TIMES BAR DIAMETER.
R29. LAPPED SPLICE LENGTHS FOR HORIZONTAL BARS WITH MORE THAN 300mm CONCRETE CAST BELOW THE BAR AND SPACED AT ≥ 150mm CENTRES TO COMPLY WITH THE FOLLOWING UNO:

COVER	f'c	N12	N16	N20	N24	N28	N32
≥ 25	≥ 20	770	1150	1570	-	-	-
≥ 30	≥ 25	630	980	1350	1740	-	-
≥ 40	≥ 32	510	770	1100	1440	1810	2220
≥ 50	≥ 40	460	630	890	1200	1530	1890

DO NOT INTERPOLATE INTERMEDIATE VALUES OF SPLICE LENGTHS.
LAPPED SPLICE LENGTHS FOR BARS IN COLUMNS REFER TO AS3600 OR SUPERINTENDENT.
EPOXY COATED BARS, BARS IN LIGHTWEIGHT CONCRETE AND SLIP FORMED CONCRETE WILL REQUIRE LONGER SPLICE LENGTHS. REFER TO AS3600 OR SUPERINTENDENT.
R30. LAPPED SPLICE LENGTHS FOR VERTICAL BARS (AND HORIZONTAL BARS WITH LESS THAN 300mm CONCRETE CAST BELOW THE BAR) SPACED AT ≥ 150mm CENTRES TO COMPLY WITH THE FOLLOWING UNO:

COVER	f'c	N12	N16	N20	N24	N28	N32
≥ 25	≥ 20	590	890	1210	-	-	-
≥ 30	≥ 25	490	750	1040	1340	-	-
≥ 40	≥ 32	390	600	840	1110	1400	1710
≥ 50	≥ 40	350	480	690	920	1180	1450

NOT APPLICABLE FOR BARS IN COLUMNS.
DO NOT INTERPOLATE INTERMEDIATE VALUES OF SPLICE LENGTHS.
LAPPED SPLICE LENGTHS FOR BARS IN COLUMNS REFER TO AS3600 OR SUPERINTENDENT.
EPOXY COATED BARS, BARS IN LIGHTWEIGHT CONCRETE AND SLIP FORMED CONCRETE WILL REQUIRE LONGER SPLICE LENGTHS. REFER TO AS3600 OR SUPERINTENDENT.
R31. REINFORCEMENT SPLICES IN TENSION MEMBERS MUST BE WELDED OR MECHANICAL SPLICES.
R32. ENSURE REINFORCEMENT COUPLERS PROVIDE FULL TENSION CAPACITY OF REINFORCEMENT.
R33. LAY MESH REINFORCEMENT SO THAT MINIMUM COVER IS TO MAIN WIRES UNO.
R34. DO NOT WELD REINFORCEMENT UNLESS SHOWN ON DRAWINGS OR OTHERWISE APPROVED BY SUPERINTENDENT. WHERE ALLOWED, WELDING OF REINFORCEMENT (INCLUDING TACK-WELDING FOR FIXING PURPOSES) TO COMPLY WITH AS3600 AND AS/NZS1554.3. DO NOT WELD REINFORCEMENT WITHIN 75mm OF A SECTION THAT HAS BEEN BENT (100mm FOR N28 AND N32 BARS, 125mm FOR N36 BARS).
EXTENT OF WELD INSPECTION/TESTING TO BE:
- VISUAL SCANNING 100% OF WELDS
- VISUAL EXAMINATION 50% OF WELDS
- RADIOGRAPHIC OR ULTRASONIC 5% OF FILLET WELDS AND 100% OF BUTT WELDS.

TENDER ISSUE
NOT FOR CONSTRUCTION

No.	REVISION DETAILS		
1	REISSUED FOR TENDER	RK	16.04.21
0	ISSUED FOR TENDER	CW	07.09.17

CONSULTANT DETAILS:
GHD
57 Graham Street Nowra NSW 2541
T 61 2 4424 4900 F 61 2 4424 4999
E noamail@ghd.com W www.ghd.com
CONSULTANT REFERENCE No. 24356-204

Shoalhaven Water
A Group of Shoalhaven City Council

DESIGNED: AD	DATE: 29.06.15	COMPANY: GHD	
DRAWN: HA	DATE: 14.07.15	COMPANY: GHD	
CHECKED: SR	DATE: 20.05.15	COMPANY: GHD	
APPROVED: CS	DATE: 07.09.17	COMPANY: GHD	

TITLE:
SHOALHAVEN WATER
LYREBIRD PARK NOWRA SPS2 UPGRADE

STRUCTURAL NOTES
SHEET 2 OF 2

SIZE	SCALE	INDEX No.	DRAWING No.	SHEET	REV No.
A1	N.T.S.		24356	204	1

Plot Date: 15/04/21 - 21:29 Cad File: N:\AU\Wollongong\Projects\23\12540351\CADD\Drawings\Lyrebird\24356-204.dwg

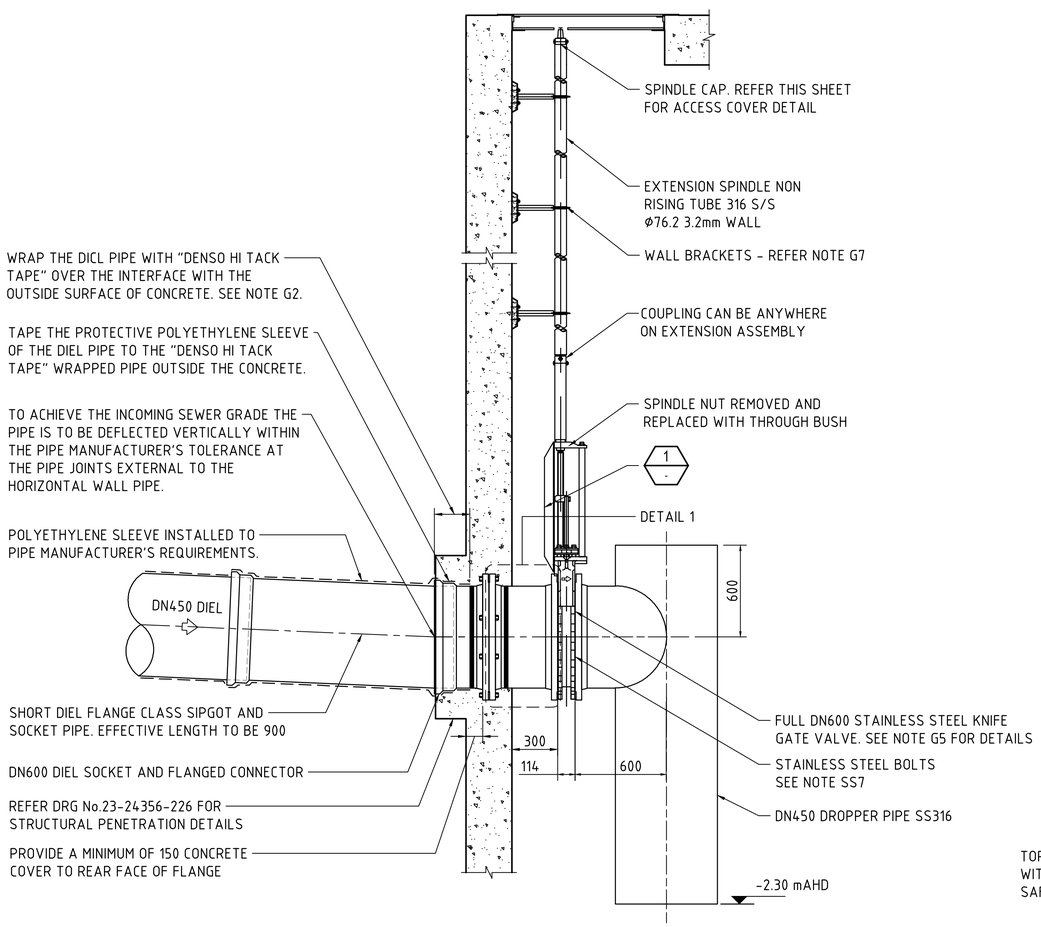

WET WELL PENETRATION DETAIL
SCALE 1:20

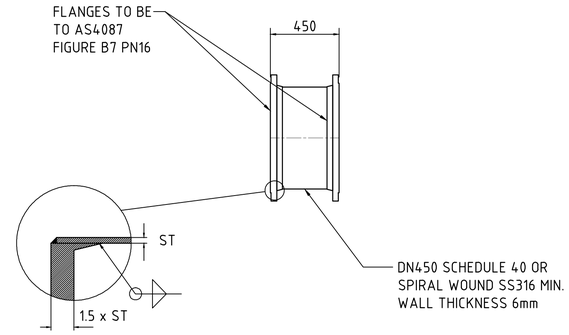

VALVE WALL PIPE
1 / - DETAIL
SCALE 1:20

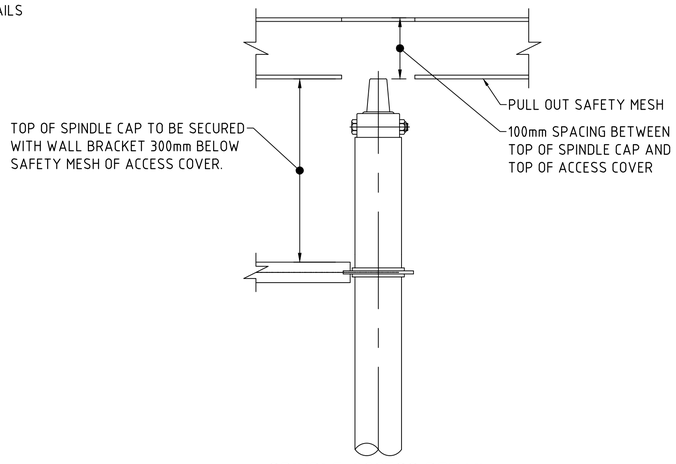

SPINDLE ACCESS DETAIL
SCALE 1:5

GENERAL NOTES :

G1. THE PIPE WALL THICKNESS SHOWN ON THE TABULATION ARE MINIMUM THICKNESSES ONLY. THE STAINLESS STEEL PIPE MAY BE SCHEDULE, SPIRAL WELDED, OR FABRICATED PIPE.
G2. THE POLYETHYLENE SLEEVE ON THE STAINLESS STEEL WALL PIPE IS TO HAVE A MINIMUM THICKNESS OF 6mm. THE SLEEVE IS TO BE FITTED TO THE PIPE BEFORE ONE END FLANGE IS WELDED IN PLACE. THE SLEEVE IS TO HAVE AN INTERFERENCE FIT AND IS TO BE HEATED TO EXPAND TO ALLOW INSTALLATION. THE SLEEVE IS TO BE MACHINED FROM PIPE OR SOLID AND IS NOT TO BE FABRICATED AND SHALL NOT HAVE ANY WELDED JOINTS. THE POLYETHYLENE SLEEVE MAY ONLY BE OMITTED IF PRIOR APPROVAL IS GIVEN BY SHOALHAVEN WATER.
G3. EXTREME CARE MUST BE TAKEN WHEN INSTALLING THE WALL PIPE TO ENSURE THAT THE PIPE IS HORIZONTAL AND THE FLANGE ADJACENT TO THE VALVE IS VERTICAL TO WITHIN A TOLERANCE OF 0.2° AND WITH BOLT HOLES ALIGNED CORRECTLY. THIS ENSURES THE VALVE SPINDLE IS INSTALLED VERTICALLY AND ALIGNS WITH PLUMMER BLOCKS AND THE CENTER OF THE HOLE IN THE TOP SLAB.
G4. THE PIPE AT THE INTERFACE WITH THE OUTER FACE OF THE CONCRETE WALL IS TO BE WRAPPED WITH "DENSO HI TACK TAPE" OVER THE AREA INDICATED ON THIS DRAWING. THE SURFACE IS TO BE PREPARED AS REQUIRED BY THE TAPE MANUFACTURER AND PRIMED WITH A THIN FILM OF "DENSO PRIMER" THE PIPE IS THEN TO BE WRAPPED WITH THE "DENSO HI TACK TAPE" WITH EACH BINDING OVERLAPPING THE PREVIOUS BINDING BY A MINIMUM OF 50% .
G5. THE VALVE IS TO BE A FULL 316 STAINLESS STEEL LUGGED KNIFE GATE VALVE WITH METAL SEAT AND RTFE SCRAPER, "KEYSTONE FIGURE 952" OR APPROVED ALTERNATIVE. THE VALVE IS TO BE MODIFIED BY THE VALVE SUPPLIER BY REMOVING THE SPINDLE NUT AND REPLACING WITH A THROUGH BUSH. IN ADDITION THE THREADED SPINDLE IS TO BE REPLACED WITH A STRAIGHT SHAFT WITH AN END SUITABLE FOR CONNECTION TO THE DN32 EXTENDED SPINDLE SHAFT. VALVE SHALL BE CLOCKWISE CLOSING.
G6. ALL FLANGES ARE TO BE TO AS 4087 FIGURE B7 PN16.
G7. WALL BRACKET FIXINGS AND SPACING TO COMPLY WITH KNIFE GATE VALVE MANUFACTURER'S REQUIREMENTS.

STAINLESS STEEL NOTES :

SS1. STAINLESS STEEL WORK SHALL COMPLY TO AS/NZS 1554.6-1994 AND AS 2837-1986 OR APPROVED EQUIVALENT.
SS2. STAINLESS STEEL MATERIALS SHALL BE SUPPLIED TO AISI GRADE 316 OR GRADE 316L.
SS3. WELDING SHALL COMPLY TO AUSTRALIAN WELDING RESEARCH ASSOCIATION TECHNICAL NOTE 16 - WELDING STAINLESS STEELS. WELDS SHALL BE 4mm CONTINUOUS FILLET WELDS (AWS E316L ELECTRODE), UNLESS NOTED OTHERWISE.
SS4. ALL WELDS ARE TO BE AS SHOWN AND ARE TO BE CONTINUOUS SEAL WELDS.
SS5. ALL STORAGE, FABRICATION AND WELDING OF STAINLESS STEEL SHALL BE CARRIED OUT IN AN AREA SPECIFICALLY DEDICATED TO THE PARTICULAR GRADE OF STAINLESS STEEL BEING USED.
SS6. ALL FABRICATED STAINLESS STEELWORKS IS TO BE PASSIVATED.
SS7. ALL STAINLESS STEEL BOLTS ARE TO BE ASSEMBLED WITH ANTI GALLING COMPOUND "DURALAC" OR APPROVED EQUIVALENT.

0 0.2 0.4 0.6 0.8 1.0m
SCALE 1:20 AT ORIGINAL SIZE

0 0.05 0.1 0.15 0.2 0.25m
SCALE 1:5 AT ORIGINAL SIZE

TENDER ISSUE
NOT FOR CONSTRUCTION

No.	REVISION DETAILS		
1	REISSUED FOR TENDER	RK	16.04.21
0	ISSUED FOR TENDER	CW	07.09.17

CONSULTANT DETAILS:
GHD
57 Graham Street Nowra NSW 2541
T 61 2 4424 4900 F 61 2 4424 4999
E noamail@ghd.com W www.ghd.com

CONSULTANT REFERENCE No.
24356-206

Shoalhaven Water
A Group of Shoalhaven City Council

DESIGNED: CW	DATE: 26.03.15	COMPANY: GHD	
DRAWN: JC	DATE: 16.07.15	COMPANY: GHD	
CHECKED: SR	DATE: 20.05.15	COMPANY: GHD	
APPROVED: CS	DATE: 07.09.17	COMPANY: GHD	

TITLE:
SHOALHAVEN WATER
LYREBIRD PARK NOWRA SPS2 UPGRADE

WET WELL PENETRATION DETAIL

SIZE	SCALE	INDEX No.	DRAWING No.	SHEET	REV No.
A1	AS SHOWN		24356	206	1

Plot Date: 15/04/21 - 21:29 Cad File: N:\AU\Wollongong\Projects\23\12540351\CADD\Drawings\Lyrebird\24356-206.dwg

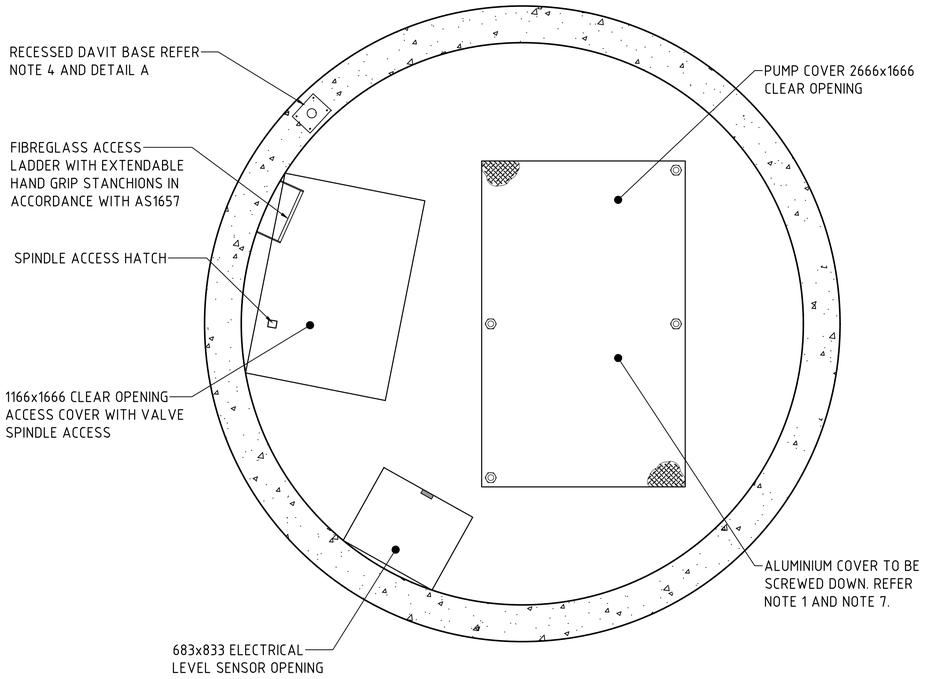

ACCESS DETAIL
SCALE 1:25

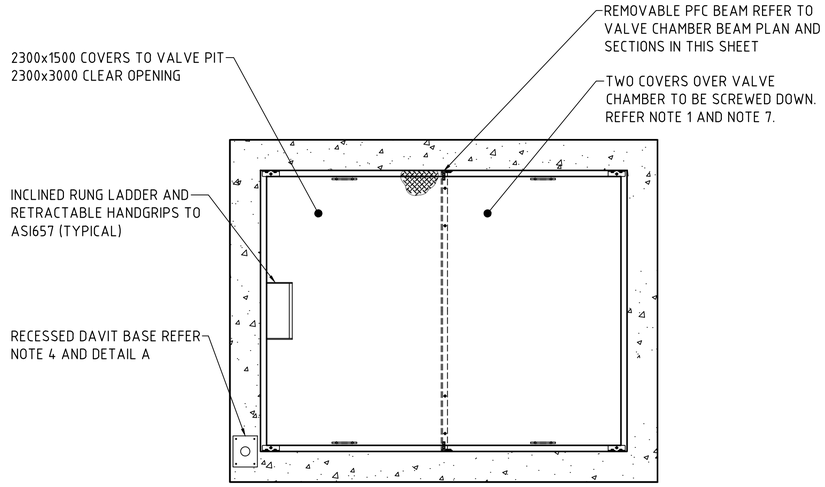

NOTES:

1. ALL ACCESS COVERS TO BE McBERNS LFVP - 4 SIDE VOID PROTECTION OR APPROVED EQUIVALENT. ACCESS COVERS SHALL HAVE AN ODOUR SEAL AND PULL OUT SAFETY MESH UNDERNEATH. COVERS SHALL HAVE THE CAPABILITY TO BE SECURED IN PLACE WHEN OPEN.
2. ACCESS COVERS TO BE FLUSH MOUNTED WITH LOW PROFILE HINGES AND CONCEALED LOCK BOXES WITH STANDARD KEY ENTRY. COVERS TO BE FINISHED WITH NON SLIP GREEN RUBBER COATING.
3. ACCESS COVER DIMENSIONS SHOWN ON THIS DRAWING ARE 'CLEAR OPENING' DIMENSIONS UNLESS OTHERWISE SPECIFIED.
4. DAVITS SHALL BE RECESSED 'DE SALA' OR EQUIVALENT, REFER DETAIL A.
5. REFER TO STRUCTURAL DRG No. 24356-225 FOR ACCESS COVER SETOUTS.
6. CONCEALED LOCKABLE HINGE LID TO BE PROVIDED FOR ACCESS TO SPINDLE CAPS. SAFETY MESH TO CONTAIN A VOID TO ALLOW SPINDLE TO EXTEND TO UNDERSIDE OF ALUMINIUM COVER.
7. SCREW DOWN ACCESS COVERS TO BE SECURED IN PLACE AS PER MANUFACTURERS REQUIREMENTS.
8. FRAMES FOR ACCESS COVERS TO BE FIXED TO WET WELL AND VALVE CHAMBER AS PER MANUFACTURERS REQUIREMENTS.

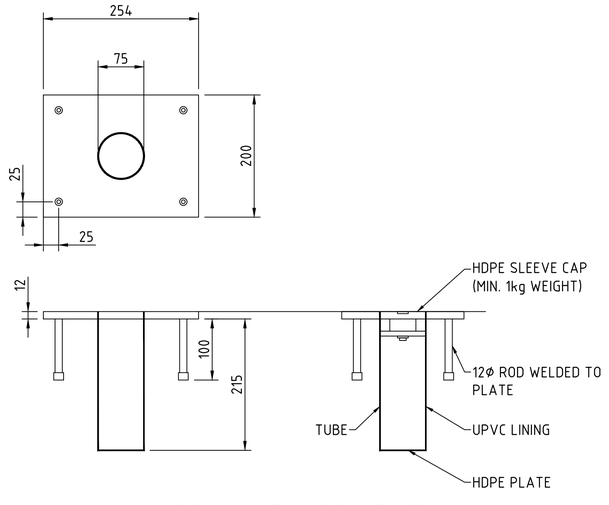

DETAIL A - DAVIT POINT DETAILS
SCALE 1:5

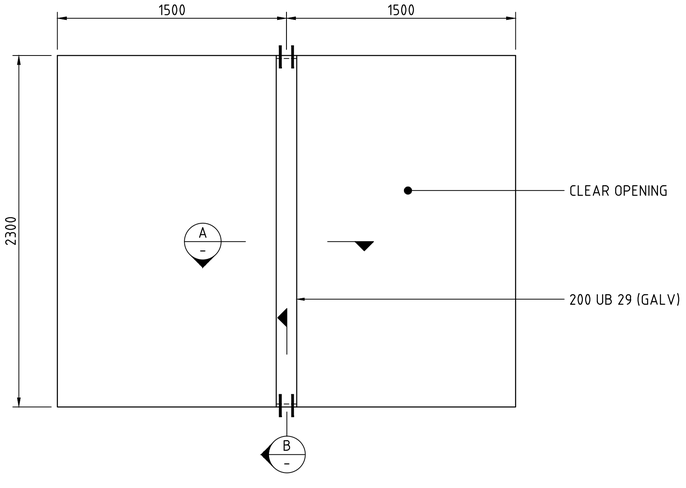

VALVE CHAMBER PLAN
SCALE 1:20

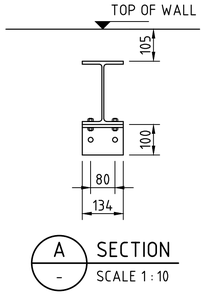

A SECTION
SCALE 1 : 10

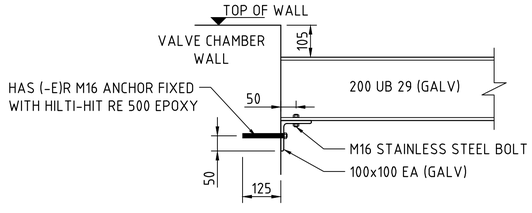

B SECTION
SCALE 1 : 10

SCALE 1:10 AT ORIGINAL SIZE
SCALE 1:25 AT ORIGINAL SIZE
SCALE 1:5 AT ORIGINAL SIZE
SCALE 1:20 AT ORIGINAL SIZE

TENDER ISSUE
NOT FOR CONSTRUCTION

No.	REVISION DETAILS		
1	REISSUED FOR TENDER	RK	16.04.21
0	ISSUED FOR TENDER	CW	07.09.17

CONSULTANT DETAILS:
GHD
57 Graham Street Nowra NSW 2541
T 61 2 4424 4900 F 61 2 4424 4999
E noamail@ghd.com W www.ghd.com

CONSULTANT REFERENCE No. 24356-207

Shoalhaven Water
A Group of Shoalhaven City Council

DESIGNED: CW	DATE: 26.03.15	COMPANY: GHD	
DRAWN: JC	DATE: 16.07.15	COMPANY: GHD	
CHECKED: SR	DATE: 20.05.15	COMPANY: GHD	
APPROVED: CS	DATE: 07.09.17	COMPANY: GHD	

TITLE:
SHOALHAVEN WATER
LYREBIRD PARK NOWRA SPS2 UPGRADE

SPS ACCESS DETAILS

SIZE	SCALE	INDEX No.	DRAWING No.	SHEET	REV No.
A1	AS SHOWN		24356	207	1

Plot Date: 15/04/21 - 21:29 Cad File: N:\AU\Wollongong\Projects\23\12540351\CADD\Drawings\Lyrebird\24356-207.dwg

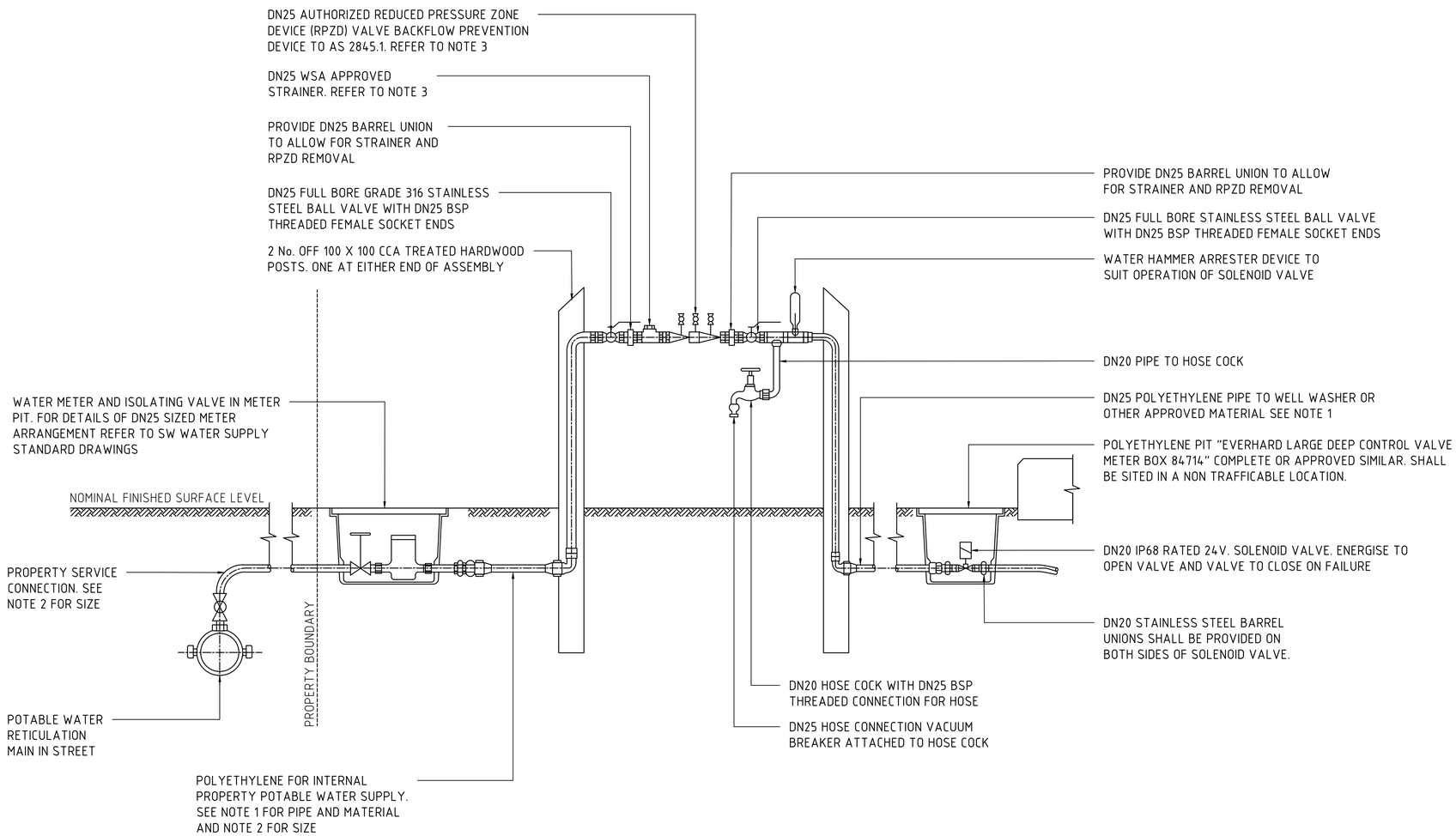

NOTES:

1. THE PIPE MATERIAL IS BELOW GROUND AND NOT UNDER CONCRETE SLABS SHALL BE POLYETHYLENE PE 100 PN16. PLASSON OR APPROVED SIMILAR COMPRESSION FITTINGS MAY BE USED ON THE POLYETHYLENE PIPES. THE EXCEPTION TO USING POLYETHYLENE IS IN LOCATIONS OF LAND FILL OR GROUND CONTAMINATED WITH HYDROCARBONS. IN SUCH LOCATIONS GRADE 316 STAINLESS STEEL OR PROTECTED COATED COPPER SHALL BE USED. IN ABOVE GROUND LOCATIONS COPPER OR GRADE 316 STAINLESS STEEL SHALL BE USED. FOR LOCATIONS UNDER CONCRETE SLABS SCHEDULE 40S GRADE 316 STAINLESS STEEL IS TO BE USED. BSP THREADED STAINLESS STEEL FITTINGS SHALL BE USED ON THE STAINLESS STEEL PIPE.
2. THE POTABLE WATER SUPPLY PIPE FROM THE WATER MAIN SHALL BE SIZED TO PROVIDE 1 l/s (AT 250 kPa MAINS PRESSURE) ON THE DOWNSTREAM SIDE OF THE RPZD. THIS SERVICE PIPE AND THE RPZD AND ASSOCIATED FITTINGS SHALL HAVE A MINIMUM DIAMETER OF DN25 FOR COPPER AND STAINLESS STEEL AND DN32 FOR THE POLYETHYLENE. THE HOSE COCK AND THE WELL WASHER PIPE SHALL BE DN20 FOR COPPER AND STAINLESS STEEL AND DN25 FOR POLYETHYLENE.
3. FITTINGS CONTAINED IN THE ABOVE GROUND CABINET SHALL BE BRONZE OR GRADE 316 STAINLESS STEEL. ALL FITTINGS SHALL HAVE AN AUSTRALIAN STANDARDS MARK.
4. ALL STAINLESS STEEL THREADS SHALL BE ASSEMBLED WITH THREAD TAPE OR ANTI-GALLING COMPOUND.
5. CABINET: THE CABINET FOR THE RPZD AND HOSE COCK SHALL BE CONSTRUCTED FROM 3mm THICK GRADE 5052 ALUMINIUM OR 1.6 THICK GRADE 316 STAINLESS STEEL. THE CABINET SHALL BE CONSTRUCTED TO THE SAME SPECIFICATION AS THE SWITCHBOARD FOR THE STANDARD PUMPING STATION . THE HANDLE SHALL BE FITTED WITH A LOCK KEYED FOR SEQ-SP (CONTACT FOR APPROPRIATE KEY). THE DOOR SHALL HAVE VERTIVAL HINGES TO ALLOW FOR HORIZONTAL OPENING OF THE DOOR.
   NOTE: A DIA.75 HOLE SHALL BE PLACED DIRECTLY UNDER THE HOSE COCK.
6. SAFETY SIGN: ONE SAFETY SIGN SHALL BE PLACED ON THE EXTERNAL SURFACE OF THE DOOR AND ONE SAFETY SIGN SHALL BE PLACED ON THE INSIDE OF THE CABINET ADJACENT TO THE HOSE COCK. THE SAFETY SIGNS SHALL BE INSTALLED AS INDICATED IN AS3500.1 SECTION 4.4.5 AND THE SIGN SHALL BE A VERBAL PICTOGRAM AS SHOWN IN AS3500.1 SECTION 9 AND SHALL BE INSCRIBED "WARNING DO NOT DRINK".

TENDER ISSUE
NOT FOR CONSTRUCTION

No.	REVISION DETAILS		
1	REISSUED FOR TENDER	RK	16.04.21
0	ISSUED FOR TENDER	CW	07.09.17

CONSULTANT DETAILS:
GHD
57 Graham Street Nowra NSW 2541
T 61 2 4424 4900 F 61 2 4424 4999
E noamail@ghd.com W www.ghd.com

CONSULTANT REFERENCE No.: 24356-208

Shoalhaven Water
A Group of Shoalhaven City Council

DESIGNED: CW	DATE: 26.03.15	COMPANY: GHD	
DRAWN: JC	DATE: 16.07.15	COMPANY: GHD	
CHECKED: SR	DATE: 20.05.15	COMPANY: GHD	
APPROVED: CS	DATE: 07.09.17	COMPANY: GHD	

TITLE:
SHOALHAVEN WATER
LYREBIRD PARK NOWRA SPS2 UPGRADE

RPZ TYPICAL DETAIL

SIZE:	SCALE:	INDEX No.	DRAWING No.	SHEET	REV No.
A1	N.T.S.		24356	208	1

Plot Date: 15/04/21 - 21:29 Cad File: N:\AU\Wollongong\Projects\23\12540351\CADD\Drawings\Lyrebird\24356-208.dwg

SURVEY CONTROL POINTS

POINT	EASTING	NORTHING	LEVEL
BM	281705.150	6137209.480	3.764
GIN	281692.018	6137165.984	3.277
DPY	281716.211	6137213.298	3.592

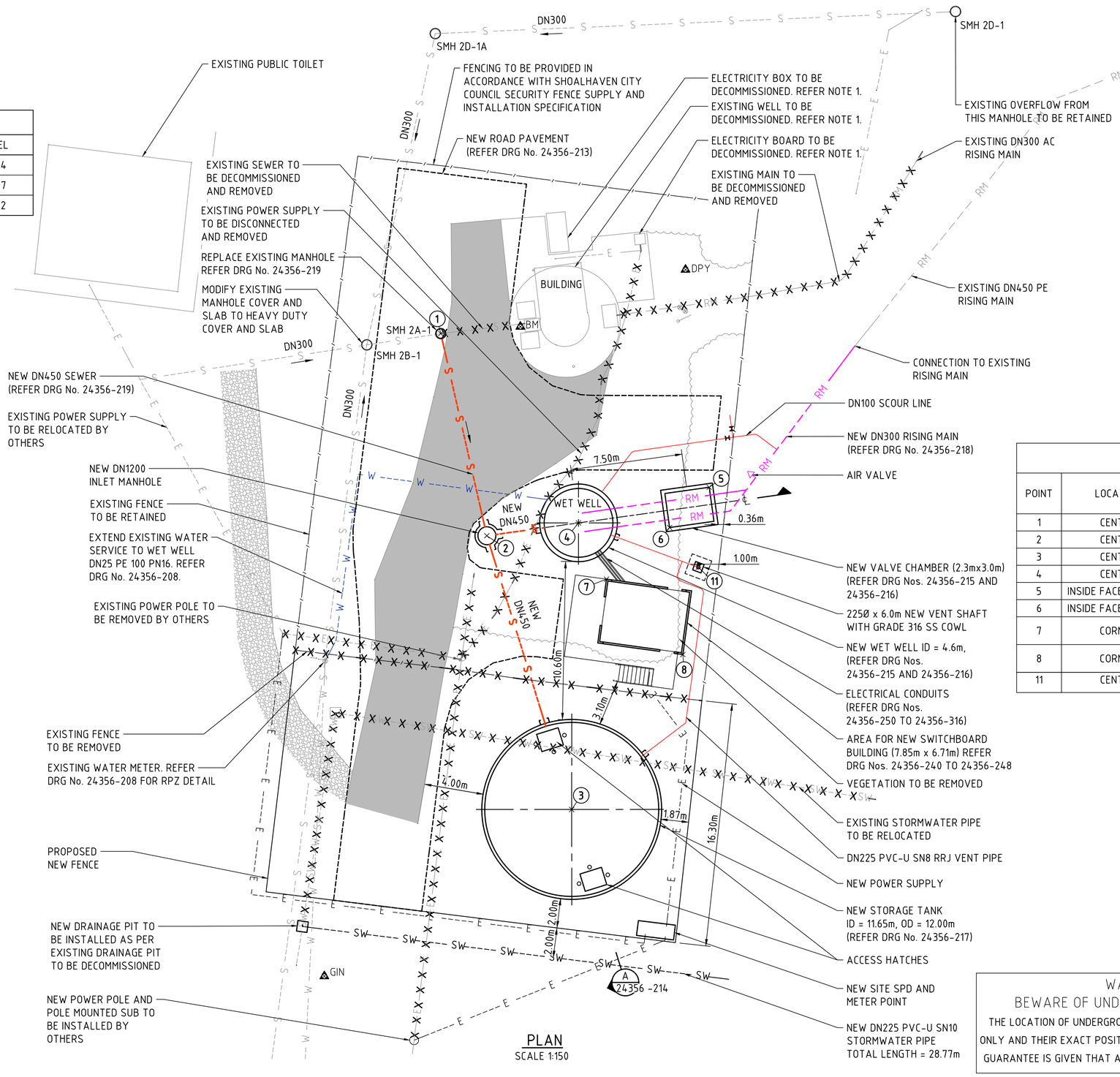

PLAN
SCALE 1:150

LEGEND

- EXISTING RISING MAIN
- EXISTING SEWER MAIN
- EXISTING STORM WATER
- EXISTING DRAIN
- EXISTING WATER MAIN
- EXISTING ELECTRICITY BELOW GROUND
- EXISTING ELECTRICITY ABOVE GROUND
- EXISTING CONTOUR MAJOR
- EXISTING CONTOUR MINOR
- TO BE DECOMMISSIONED
- EXISTING FENCE
- NEW SEWER MAIN
- NEW STORM WATER
- NEW RISING MAIN
- NEW WATER SERVICE
- EDGE OF NEW ASPHALTIC CONCRETE SURFACE
- EDGE OF VEGETATION
- XXX CONTROL POINTS
- SEWER MANHOLE
- EXISTING GRAVEL TRACK
- EXISTING ASPHALTIC CONCRETE

SETOUT POINTS

POINT	LOCATION	EASTING	NORTHING	FINISHED SURFACE LEVEL	COMMENTS
1	CENTRE	281699.82	6137209.02	3.50	NEW MANHOLE
2	CENTRE	281702.90	6137195.48	3.27	NEW MANHOLE
3	CENTRE	281708.59	6137177.15	3.27	NEW STORAGE TANK
4	CENTRE	281709.04	6137196.34	3.55	NEW WET WELL
5	INSIDE FACE OF WALL	281717.80	6137198.73	3.55	NEW VALVE CHAMBER
6	INSIDE FACE OF WALL	281714.56	6137195.25	3.55	NEW VALVE CHAMBER
7	CORNER	281710.92	6137192.57	3.155	NEW SWITCHBOARD BUILDING SUB FLOOR
8	CORNER	281716.12	6137186.51	3.155	NEW SWITCHBOARD BUILDING SUB FLOOR
11	CENTER	281717.07	6137193.37	3.075	NEW VENT SHAFT

FLOOD EVENT	EXISTING	PROJECTED 2050
FLOOD PLANNING LEVEL	NOT APPLICABLE	5.1m AHD
PROBABLE MAXIMUM FLOOD LEVEL	7.0m AHD	7.0m AHD
1% AEP FLOOD LEVEL	4.6m AHD	4.6m AHD
2% AEP FLOOD LEVEL	3.9m AHD	3.9m AHD
5% AEP FLOOD LEVEL	1.9m AHD	2.1m AHD
10% AEP FLOOD LEVEL	1.7m AHD	1.7m AHD

NOTES

1. EXISTING SPS FACILITY TO BE DEMOLISHED

0 1.5 3 4.5 6 7.5m
SCALE 1:150 AT ORIGINAL SIZE

WARNING
BEWARE OF UNDERGROUND SERVICES
THE LOCATION OF UNDERGROUND SERVICES ARE APPROXIMATE ONLY AND THEIR EXACT POSITION SHOULD BE PROVEN ON SITE. NO GUARANTEE IS GIVEN THAT ALL EXISTING SERVICES ARE SHOWN.

DIAL BEFORE YOU DIG www.1100.com.au

TENDER ISSUE
NOT FOR CONSTRUCTION

No.	REVISION DETAILS		
1	REISSUED FOR TENDER	RK	16.04.21
0	ISSUED FOR TENDER	CW	07.09.17

CONSULTANT DETAILS:
GHD
57 Graham Street Nowra NSW 2541
T 61 2 4424 4900 F 61 2 4424 4999
E noamail@ghd.com W www.ghd.com

CONSULTANT REFERENCE No. 24356-212

Shoalhaven Water
A Group of Shoalhaven City Council

DESIGNED: CW	DATE: 26.03.15	COMPANY: GHD	
DRAWN: JC	DATE: 26.03.15	COMPANY: GHD	
CHECKED: SR	DATE: 20.05.15	COMPANY: GHD	
APPROVED: CS	DATE: 07.09.17	COMPANY: GHD	

TITLE:
SHOALHAVEN WATER
LYREBIRD PARK NOWRA SPS2 UPGRADE

SITE LAYOUT PLAN

SIZE	SCALE	INDEX No.	DRAWING No.	SHEET	REV No.
A1	1 : 150		24356	212	1

Plot Date: 16/04/21 - 12:03 Cad File: N:\AU\Wollongong\Projects\23\12540351\CADD\Drawings\Lyrebird\24356-212.dwg

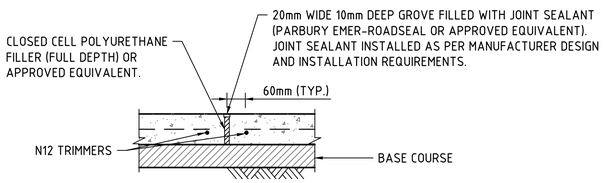

EXPANSION JOINT (EJ) DETAIL

SCALE 1:10

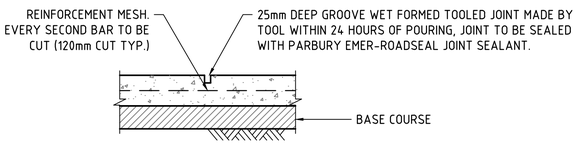

TOOL JOINT (TJ) DETAIL

SCALE 1:10

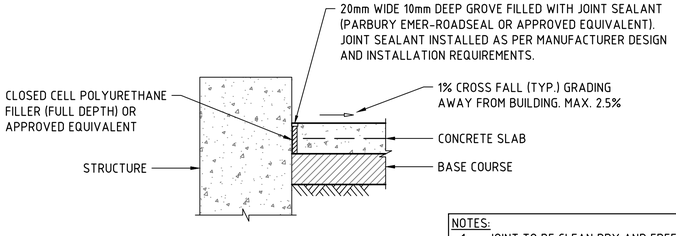

TYPICAL DETAIL ISOLATION JOINT (IJ)

SCALE 1:10

NOTES:
1. JOINT TO BE CLEAN DRY AND FREE OF ALL LOOSE MATERIAL PRIOR TO APPLICATION OF SEALANT
2. 'IJ' JOINT TO BE USED WHERE ABUTTING OTHER STRUCTURES SUCH AS BUILDINGS, KERBS AND PITS

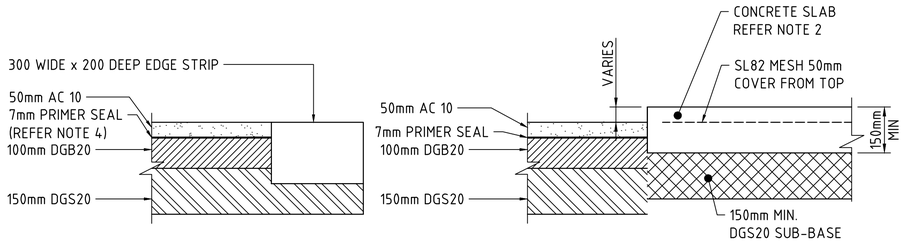

TYPICAL SECTION THROUGH ROAD PAVEMENT

SCALE 1:10

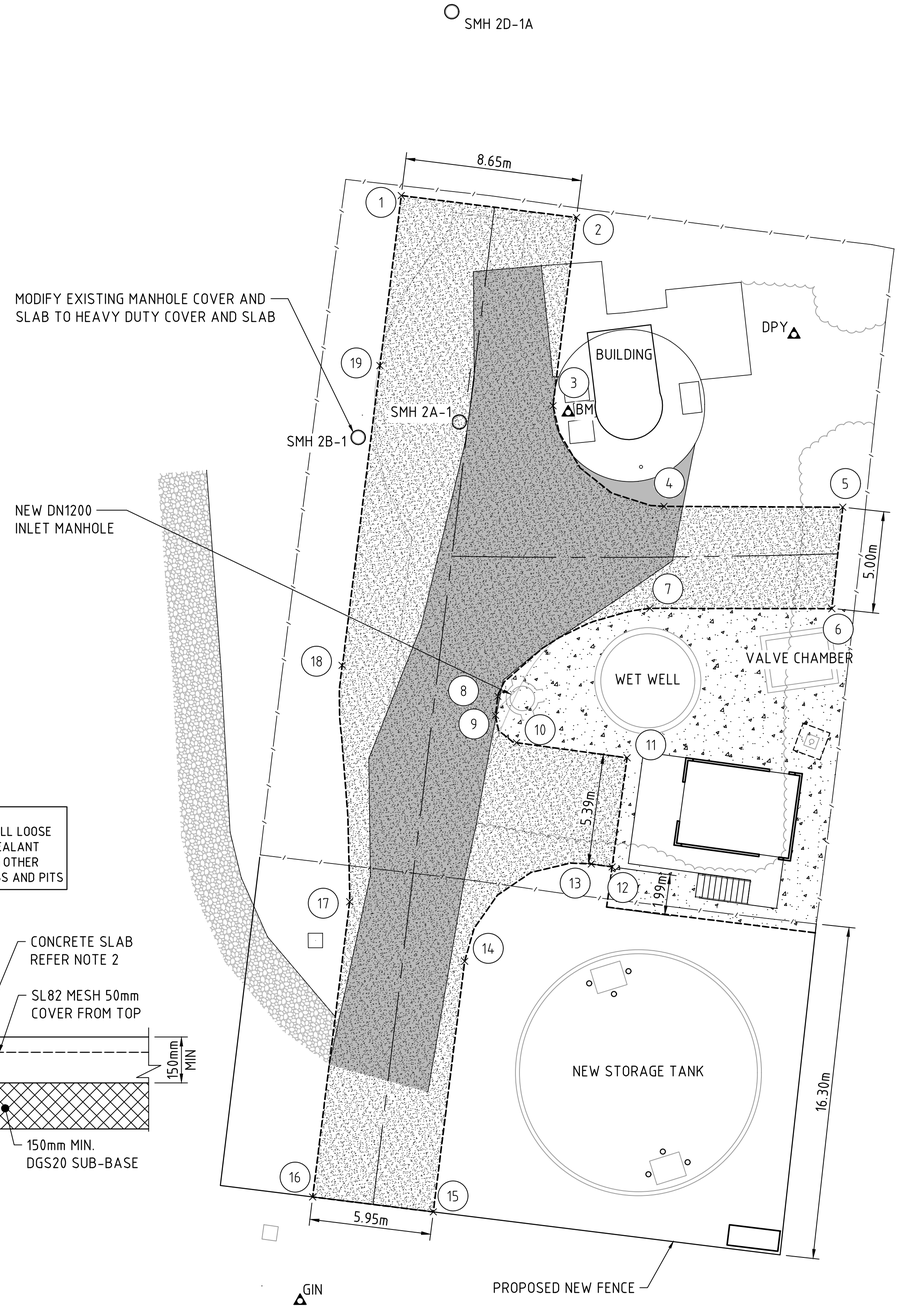

PLAN

SCALE 1:150

LEGEND

- EXISTING FENCE
- EDGE OF NEW ASPHALTIC CONCRETE SURFACE
- 0.60m BODY PATH OFFSET
- EDGE OF VEGETATION
- XXX CONTROL POINTS
- SEWER MANHOLE
- EXISTING GRAVEL TRACK
- NEW ASPHALTIC CONCRETE
- EXISTING ASPHALTIC CONCRETE
- NEW CONCRETE

NOTES:

1. AN 11-m LONG RIGID FXY1500 TRUCK HAS BEEN USED FOR DEVELOPING THE TURNING AREA. TRUCK SIZE BASED ON ADVICE RECEIVED FROM SHOALHAVEN WATER.
2. USE MINIMUM GRADE N32 CONCRETE. EXPANSION JOINTS TO BE PROVIDED EVERY 6m AND TOOL JOINTS TO BE PROVIDED EVERY 2m. ISOLATION JOINTS TO BE PROVIDED BETWEEN CONCRETE SLAB AND EXISTING STRUCTURES.
3. SITE LEVELS TO TIE INTO EXISTING SITE LEVELS UNLESS SPECIFIED.
4. A MINIMUM OF A 72 HOUR WAIT BETWEEN THE PRIME SEAL AND THE AC.

SETOUT POINTS

POINT	EASTING	NORTHING	NATURAL SURFACE	DESIGN LEVEL
1	281696.98	6137220.10	3.22	3.64
2	281705.56	6137219.03	3.17	3.59
3	281704.41	6137209.81	3.70	3.50
4	281709.84	6137204.89	3.69	3.42
5	281718.60	6137204.84	3.28	3.28
6	281718.06	6137199.87	3.14	3.30
7	281709.16	6137199.89	3.48	3.40
8	281701.71	6137195.59	3.31	3.31
9	281701.59	6137194.65	3.28	3.27
10	281702.62	6137193.32	3.22	3.18
11	281708.03	6137192.58	3.09	3.15
12	281707.30	6137187.23	3.01	3.10
13	281706.28	6137187.37	3.04	3.14
14	281700.08	6137182.61	3.10	3.20
15	281698.54	6137170.34	NOT SURVEYED	EXISITNG
16	281692.64	6137171.07	NOT SURVEYED	EXISITNG
17	281694.45	6137185.53	3.10	3.34
18	281694.08	6137197.10	3.25	3.44
19	281695.93	6137211.78	3.41	3.54

SCALE 1:10 AT ORIGINAL SIZE

SCALE 1:150 AT ORIGINAL SIZE

WARNING
BEWARE OF UNDERGROUND SERVICES
THE LOCATION OF UNDERGROUND SERVICES ARE APPROXIMATE ONLY AND THEIR EXACT POSITION SHOULD BE PROVEN ON SITE. NO GUARANTEE IS GIVEN THAT ALL EXISTING SERVICES ARE SHOWN.

DIAL BEFORE YOU DIG www.1100.com.au

TENDER ISSUE
NOT FOR CONSTRUCTION

No.	REVISION DETAILS		
1	REISSUED FOR TENDER	RK	16.04.21
0	ISSUED FOR TENDER	CW	07.09.17

CONSULTANT DETAILS:
GHD
57 Graham Street Nowra NSW 2541
T 61 2 4424 4900 F 61 2 4424 4999
E noamail@ghd.com W www.ghd.com

CONSULTANT REFERENCE No. 24356-213

Shoalhaven Water
A Group of Shoalhaven City Council

DESIGNED: CW	DATE: 26.03.15	COMPANY: GHD	
DRAWN: JC	DATE: 26.03.15	COMPANY: GHD	
CHECKED: SR	DATE: 20.05.15	COMPANY: GHD	
APPROVED: CS	DATE: 07.09.17	COMPANY: GHD	

TITLE:
SHOALHAVEN WATER
LYREBIRD PARK NOWRA SPS2 UPGRADE

SITE PLAN - MAINTENANCE VEHICLE TURNING CIRCLE

SIZE	SCALE	INDEX No.	DRAWING No.	SHEET	REV No.
A1	AS SHOWN		24356	213	1

Plot Date: 29/04/21 - 10:42 Cad File: N:\AU\Wollongong\Projects\23\12540351\CADD\Drawings\Lyrebird\24356-213.dwg

TABULATION OF PUMP STATION LEVELS		
REFERENCE	DESCRIPTION	LEVEL (MAHD)
1	1 IN 100 ARI FLOOD LEVEL	4.60
2	FLOOR LEVEL OF VALVE CHAMBER	1.60
3	OVERFLOW ALARM	1.22
4	HIGH HIGH LEVEL ALARM	0.92
5	REGULATOR LEVEL	0.25
6	HIGH LEVEL ALARM	-1.25
7	INVERT LEVEL OF INLET SEWER	-1.40
8	EMERGENCY CUT-IN LEVEL	-1.60
9	DUTY PUMP CUT - IN TOP WATER LEVEL	-1.70
10	DUTY PUMP CUT - OUT BOTTOM WATER LEVEL	-2.45
11	LOW LEVEL ALARM	-2.55
12	INVERT OF WET WELL	-3.25

EMERGENCY STORAGE CAPACITIES REQUIRED VOLUME = 264.40 m^3	
CHAMBER	VOLUME(m^3)
WET WELL	41.0m^3
EMERGENCY STORAGE TANK	191.30m^3
INLET MANHOLE	2.90m^3
UPSTREAM GRAVITY SEWER	34.90m^3

NOTES:

1. DRAWINGS SHALL NOT BE SCALED.
2. THE TOTAL EMERGENCY STORAGE CAPACITY IS DESIGNED TO BE 8 HRS AT ADWF 2041. EMERGENCY STORAGE VOLUMES ARE MEASURED TO THE OVERFLOW WATER LEVEL.
3. A SURVEY MARK IS TO BE PLACED ON THE TOP SURFACE OF THE PUMP STATION. THE LEVEL IN AHD TO 3 DECIMAL PLACES IS TO BE ENGRAVED ON A BRASS PLAQUE AND FIXED TO THE TOP SLAB. THE LEVEL IS TO BE RECORDED ON THE AS CONSTRUCTED DRAWINGS.

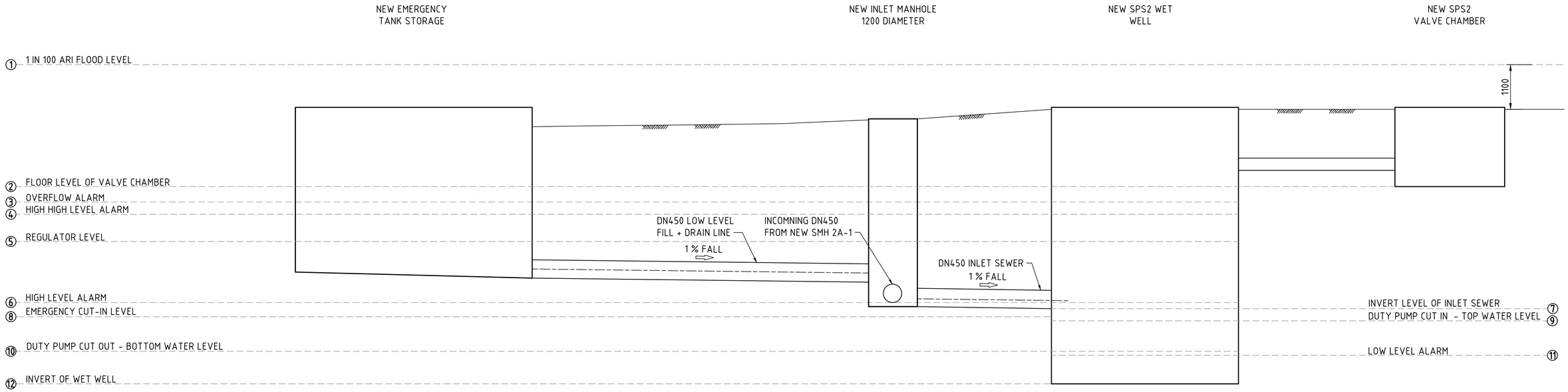

A SECTION
24356-212 N.T.S.

WARNING
BEWARE OF UNDERGROUND SERVICES
THE LOCATION OF UNDERGROUND SERVICES ARE APPROXIMATE ONLY AND THEIR EXACT POSITION SHOULD BE PROVEN ON SITE. NO GUARANTEE IS GIVEN THAT ALL EXISTING SERVICES ARE SHOWN.

DIAL BEFORE YOU DIG www.1100.com.au

TENDER ISSUE
NOT FOR CONSTRUCTION

No.	REVISION DETAILS		
1	REISSUED FOR TENDER	RK	16.04.21
0	ISSUED FOR TENDER	CW	07.09.17

CONSULTANT DETAILS:
GHD
57 Graham Street Nowra NSW 2541
T 61 2 4424 4900 F 61 2 4424 4999
E noamail@ghd.com W www.ghd.com

CONSULTANT REFERENCE No. 24356-214

Shoalhaven Water
A Group of Shoalhaven City Council

DESIGNED: CW	DATE: 26.03.15	COMPANY: GHD	
DRAWN: JC	DATE: 26.03.15	COMPANY: GHD	
CHECKED: SR	DATE: 20.05.15	COMPANY: GHD	
APPROVED: CS	DATE: 07.09.17	COMPANY: GHD	

TITLE:
SHOALHAVEN WATER
LYREBIRD PARK NOWRA SPS2 UPGRADE

LEVEL AND CAPACITIES INTERACTION DIAGRAM

SIZE	SCALE	INDEX No.	DRAWING No.	SHEET	REV No.
A1	N.T.S		24356	214	1

Plot Date: 15/04/21 - 21:29 Cad File: N:\AU\Wollongong\Projects\23\12540351\CADD\Drawings\Lyrebird\24356-214.dwg

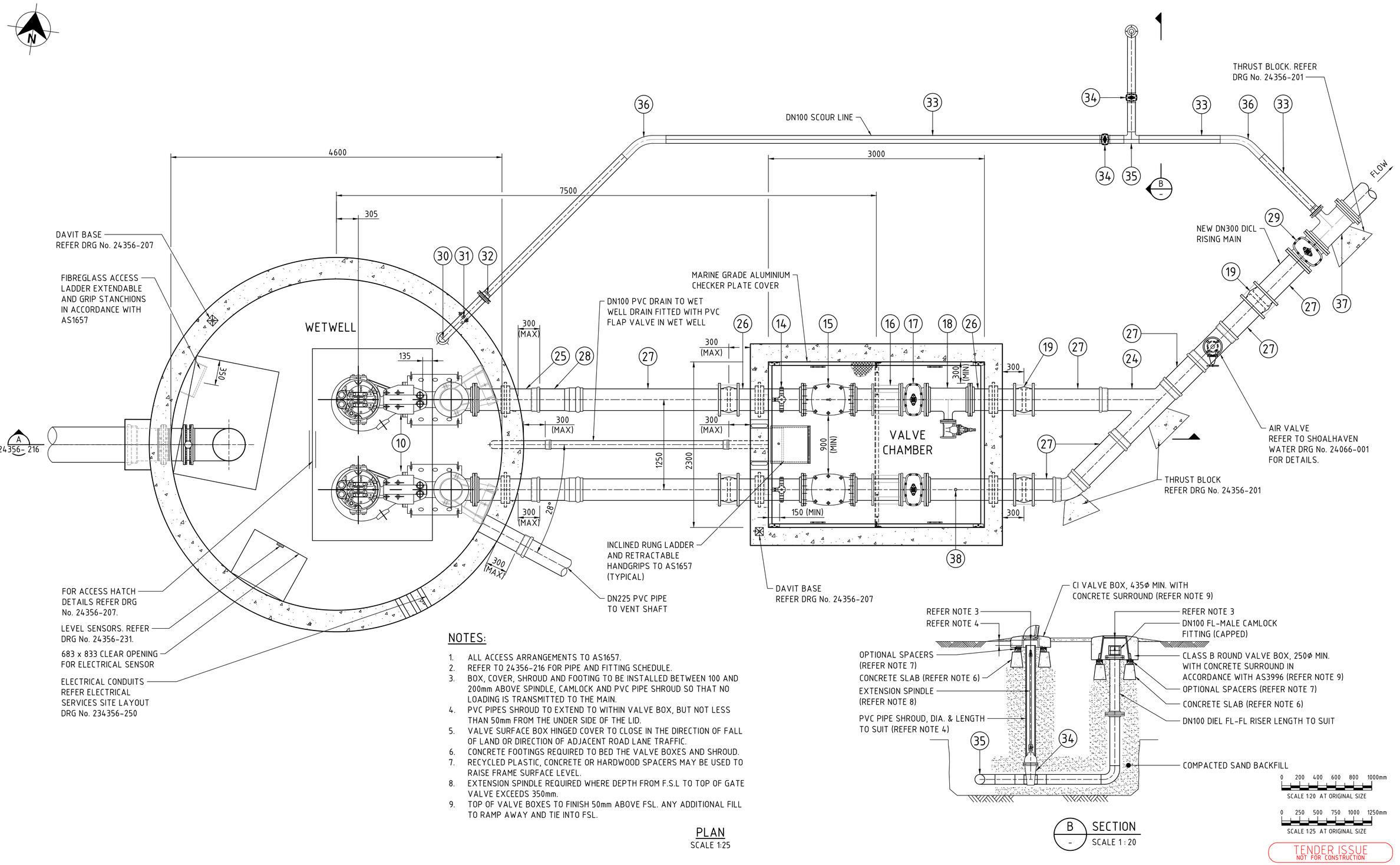

NOTES:

1. ALL ACCESS ARRANGEMENTS TO AS1657.
2. REFER TO 24356-216 FOR PIPE AND FITTING SCHEDULE.
3. BOX, COVER, SHROUD AND FOOTING TO BE INSTALLED BETWEEN 100 AND 200mm ABOVE SPINDLE, CAMLOCK AND PVC PIPE SHROUD SO THAT NO LOADING IS TRANSMITTED TO THE MAIN.
4. PVC PIPES SHROUD TO EXTEND TO WITHIN VALVE BOX, BUT NOT LESS THAN 50mm FROM THE UNDER SIDE OF THE LID.
5. VALVE SURFACE BOX HINGED COVER TO CLOSE IN THE DIRECTION OF FALL OF LAND OR DIRECTION OF ADJACENT ROAD LANE TRAFFIC.
6. CONCRETE FOOTINGS REQUIRED TO BED THE VALVE BOXES AND SHROUD.
7. RECYCLED PLASTIC, CONCRETE OR HARDWOOD SPACERS MAY BE USED TO RAISE FRAME SURFACE LEVEL.
8. EXTENSION SPINDLE REQUIRED WHERE DEPTH FROM F.S.L TO TOP OF GATE VALVE EXCEEDS 350mm.
9. TOP OF VALVE BOXES TO FINISH 50mm ABOVE FSL. ANY ADDITIONAL FILL TO RAMP AWAY AND TIE INTO FSL.

PLAN
SCALE 1:25

B - SECTION
SCALE 1 : 20

0 200 400 600 800 1000mm
SCALE 1:20 AT ORIGINAL SIZE

0 250 500 750 1000 1250mm
SCALE 1:25 AT ORIGINAL SIZE

TENDER ISSUE
NOT FOR CONSTRUCTION

No.	REVISION DETAILS		
1	REISSUED FOR TENDER	RK	16.04.21
0	ISSUED FOR TENDER	CW	07.09.17

CONSULTANT DETAILS:
GHD
57 Graham Street Nowra NSW 2541
T 61 2 4424 4900 F 61 2 4424 4999
E noamail@ghd.com W www.ghd.com

CONSULTANT REFERENCE No. 24356-215

Shoalhaven Water
A Group of Shoalhaven City Council

DESIGNED: CW	DATE: 26.03.15	COMPANY: GHD	
DRAWN: JC	DATE: 26.03.15	COMPANY: GHD	
CHECKED: SR	DATE: 20.05.15	COMPANY: GHD	
APPROVED: CS	DATE: 07.09.17	COMPANY: GHD	

TITLE:
SHOALHAVEN WATER
LYREBIRD PARK NOWRA SPS2 UPGRADE

SPS AND VALVE CHAMBER PIPEWORK PLAN

SIZE	SCALE	INDEX No.	DRAWING No.	SHEET	REV No.
A1	AS SHOWN		24356	215	1

Plot Date: 15/04/21 - 21:29 Cad File: N:\AU\Wollongong\Projects\23\12540351\CADD\Drawings\Lyrebird\24356-215.dwg

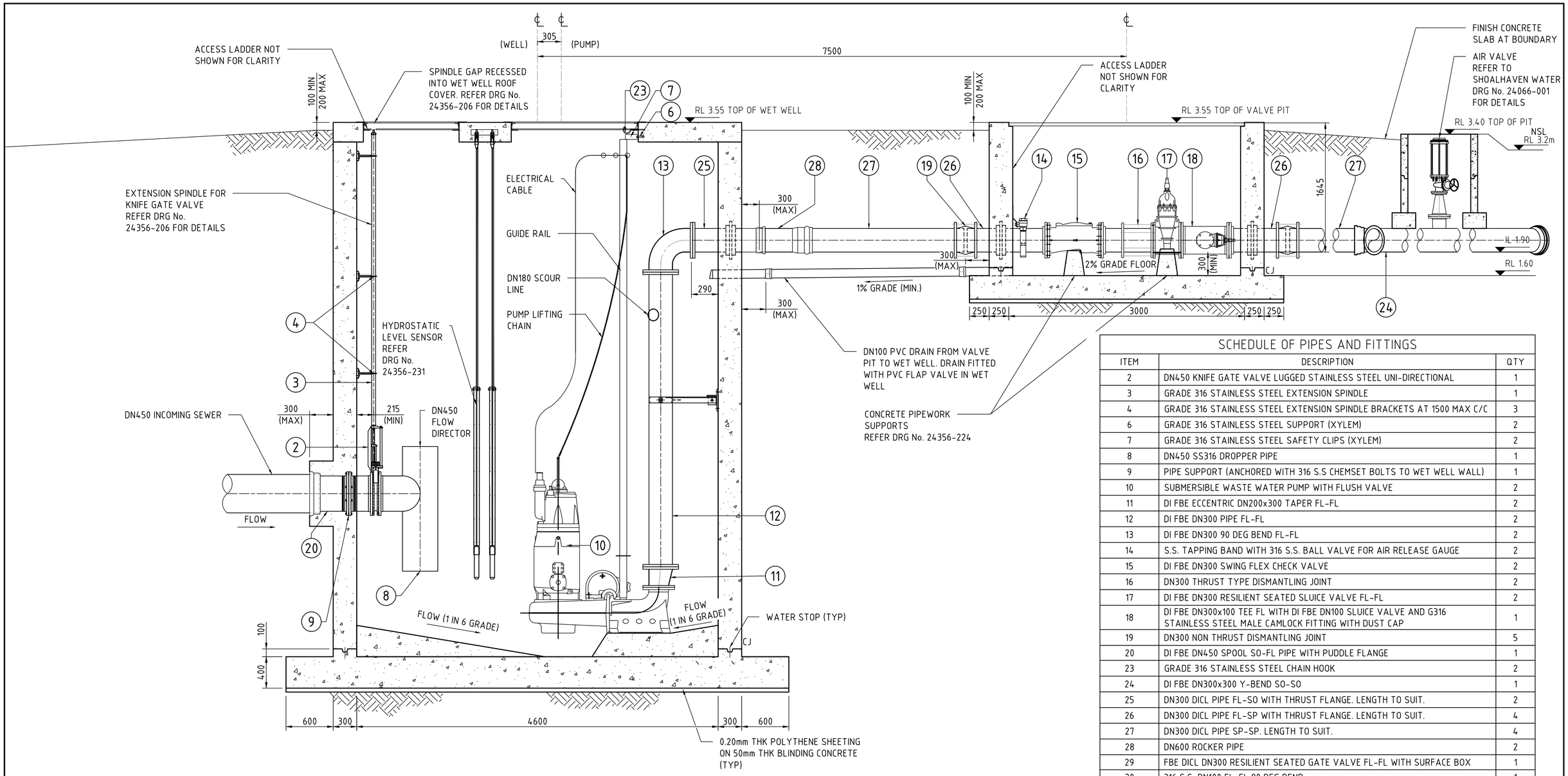

SCHEDULE OF PIPES AND FITTINGS

ITEM	DESCRIPTION	QTY
2	DN450 KNIFE GATE VALVE LUGGED STAINLESS STEEL UNI-DIRECTIONAL	1
3	GRADE 316 STAINLESS STEEL EXTENSION SPINDLE	1
4	GRADE 316 STAINLESS STEEL EXTENSION SPINDLE BRACKETS AT 1500 MAX C/C	3
6	GRADE 316 STAINLESS STEEL SUPPORT (XYLEM)	2
7	GRADE 316 STAINLESS STEEL SAFETY CLIPS (XYLEM)	2
8	DN450 SS316 DROPPER PIPE	1
9	PIPE SUPPORT (ANCHORED WITH 316 S.S CHEMSET BOLTS TO WET WELL WALL)	1
10	SUBMERSIBLE WASTE WATER PUMP WITH FLUSH VALVE	2
11	DI FBE ECCENTRIC DN200x300 TAPER FL-FL	2
12	DI FBE DN300 PIPE FL-FL	2
13	DI FBE DN300 90 DEG BEND FL-FL	2
14	S.S. TAPPING BAND WITH 316 S.S. BALL VALVE FOR AIR RELEASE GAUGE	2
15	DI FBE DN300 SWING FLEX CHECK VALVE	2
16	DN300 THRUST TYPE DISMANTLING JOINT	2
17	DI FBE DN300 RESILIENT SEATED SLUICE VALVE FL-FL	2
18	DI FBE DN300x100 TEE FL WITH DI FBE DN100 SLUICE VALVE AND G316 STAINLESS STEEL MALE CAMLOCK FITTING WITH DUST CAP	1
19	DN300 NON THRUST DISMANTLING JOINT	5
20	DI FBE DN450 SPOOL SO-FL PIPE WITH PUDDLE FLANGE	1
23	GRADE 316 STAINLESS STEEL CHAIN HOOK	2
24	DI FBE DN300x300 Y-BEND SO-SO	1
25	DN300 DICL PIPE FL-SO WITH THRUST FLANGE. LENGTH TO SUIT.	2
26	DN300 DICL PIPE FL-SP WITH THRUST FLANGE. LENGTH TO SUIT.	4
27	DN300 DICL PIPE SP-SP. LENGTH TO SUIT.	4
28	DN600 ROCKER PIPE	2
29	FBE DICL DN300 RESILIENT SEATED GATE VALVE FL-FL WITH SURFACE BOX	1
30	316 S.S. DN100 FL-FL 90 DEG BEND	1
31	FBE DICL DN100 PUDDLE FLANGE WITH DICL FL-FL CONNECTOR	1
32	DN100 PE100 PN16 WITH FLANGE BACKING RING	1
33	DN100 PE100 PN16, BUTT WELDED	3
34	DN100 RESILIENT SEATED GATE VALVE, BUTT WELDED, POLYENDED	2
35	DN100 PE100 PN16 TEE, BUTT WELDED	1
36	DN100 PE100 PN16 45 DEG BEND, BUTT WELDED	2
37	DI FBE DICL DN300x100 SCOUR TEE FL-FL	1
38	TAPPING POINT	1

NOTES:

1. REFER DRG No. 24356-215 FOR PUMP DATA INFORMATION.
2. REFER DRG No. 24356-214 FOR DUTY AND ALARM LEVELS.

0 250 500 750 1000 1250mm
SCALE 1:25 AT ORIGINAL SIZE

DIAL BEFORE YOU DIG www.1100.com.au

WARNING
BEWARE OF UNDERGROUND SERVICES
THE LOCATION OF UNDERGROUND SERVICES ARE APPROXIMATE ONLY AND THEIR EXACT POSITION SHOULD BE PROVEN ON SITE. NO GUARANTEE IS GIVEN THAT ALL EXISTING SERVICES ARE SHOWN.

TENDER ISSUE
NOT FOR CONSTRUCTION

A SECTION
24356 -215 SCALE 1 : 25

No.	REVISION DETAILS		
1	REISSUED FOR TENDER	RK	16.04.21
0	ISSUED FOR TENDER	CW	07.09.17

CONSULTANT DETAILS:
GHD
57 Graham Street Nowra NSW 2541
T 61 2 4424 4900 F 61 2 4424 4999
E noamail@ghd.com W www.ghd.com

CONSULTANT REFERENCE No. 24356-216

Shoalhaven Water
A Group of Shoalhaven City Council

DESIGNED: CW	DATE: 26.03.15	COMPANY: GHD	
DRAWN: JC	DATE: 26.03.15	COMPANY: GHD	
CHECKED: SR	DATE: 20.05.15	COMPANY: GHD	
APPROVED: CS	DATE: 07.09.17	COMPANY: GHD	

TITLE:
SHOALHAVEN WATER
LYREBIRD PARK NOWRA SPS2 UPGRADE

SPS AND VALVE CHAMBER PIPEWORK SECTION

SIZE	SCALE	INDEX No.	DRAWING No.	SHEET	REV No.
A1	1 : 25		24356	216	1

Plot Date: 15/04/21 - 21:29 Cad File: N:\AU\Wollongong\Projects\23\12540351\CADD\Drawings\Lyrebird\24356-216.dwg

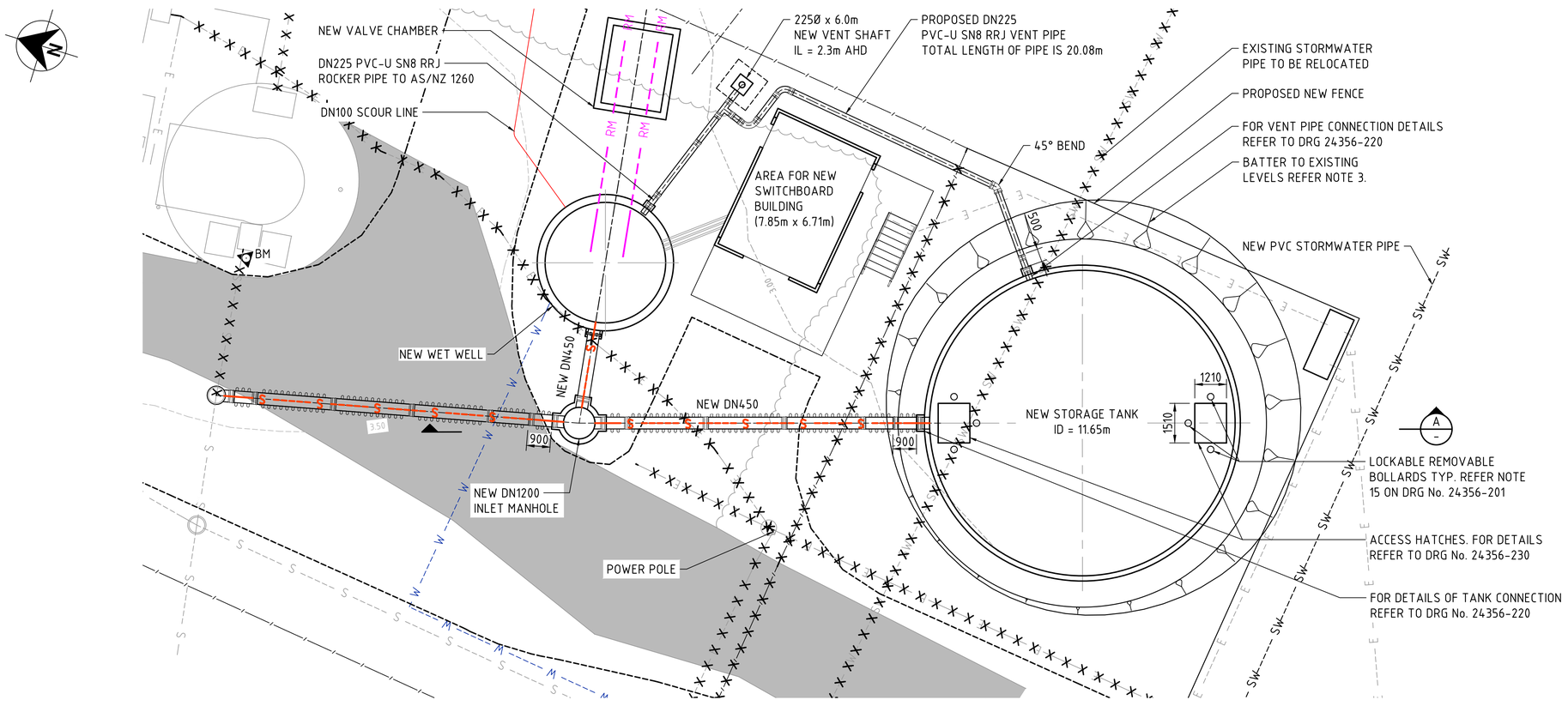

PLAN
SCALE 1:100

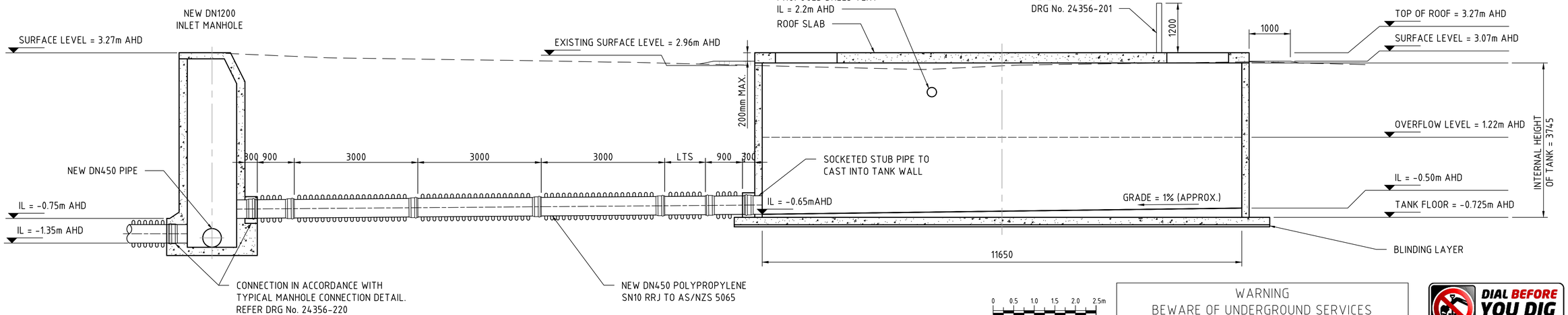

A SECTION
SCALE 1 : 50

LEGEND

- EXISTING RISING MAIN
- EXISTING SEWER MAIN
- EXISTING STORM WATER
- EXISTING DRAIN
- EXISTING WATER MAIN
- EXISTING ELECTRICITY BELOW GROUND
- EXISTING ELECTRICITY ABOVE GROUND
- EXISTING CONTOUR MAJOR
- EXISTING CONTOUR MINOR
- TO BE DECOMMISSIONED
- EXISTING FENCE
- NEW SEWER MAIN
- NEW STORM WATER
- NEW RISING MAIN
- NEW WATER SERVICE
- EDGE OF NEW ASPHALTIC CONCRETE SURFACE
- EDGE OF VEGETATION
- XXX CONTROL POINTS
- SEWER MANHOLE
- EXISTING ASPHALTIC CONCRETE

NOTES:

1. FOR DESIGN AND CONSTRUCTION SPECIFICATION FOR EMERGENCY STORAGE TANK REFER TO DRG No. 24356-202.
2. NEW MANHOLE TO BE TYPE P2 IN ACCORDANCE WITH SEW-1300 SW.
3. REGRADE GROUND AROUND EMERGENCY STORAGE TANK TO TIE INTO EXISTING GROUND. MAXIMUM GRADE OF 1 IN 5.

0 0.5 1.0 1.5 2.0 2.5m
SCALE 1:50 AT ORIGINAL SIZE

0 1 2 3 4 5m
SCALE 1:100 AT ORIGINAL SIZE

WARNING
BEWARE OF UNDERGROUND SERVICES
THE LOCATION OF UNDERGROUND SERVICES ARE APPROXIMATE ONLY AND THEIR EXACT POSITION SHOULD BE PROVEN ON SITE. NO GUARANTEE IS GIVEN THAT ALL EXISTING SERVICES ARE SHOWN.

DIAL BEFORE YOU DIG www.1100.com.au

TENDER ISSUE
NOT FOR CONSTRUCTION

No.	REVISION DETAILS		
1	REISSUED FOR TENDER	RK	16.04.21
0	ISSUED FOR TENDER	CW	07.09.17

CONSULTANT DETAILS:
GHD
57 Graham Street Nowra NSW 2541
T 61 2 4424 4900 F 61 2 4424 4999
E noamail@ghd.com W www.ghd.com

CONSULTANT REFERENCE No. 24356-217

Shoalhaven Water
A Group of Shoalhaven City Council

DESIGNED: CW	DATE: 26.03.15	COMPANY: GHD	
DRAWN: JC	DATE: 26.03.15	COMPANY: GHD	
CHECKED: SR	DATE: 20.05.15	COMPANY: GHD	
APPROVED: CS	DATE: 07.09.17	COMPANY: GHD	

TITLE:
SHOALHAVEN WATER
LYREBIRD PARK NOWRA SPS2 UPGRADE

EMERGENCY STORAGE TANK PLAN AND SECTION

SIZE	SCALE	INDEX No.	DRAWING No.	SHEET	REV No.
A1	AS SHOWN		24356	217	1

Plot Date: 15/04/21 - 21:29 Cad File: N:\AU\Wollongong\Projects\23\12540351\CADD\Drawings\Lyrebird\24356-217.dwg

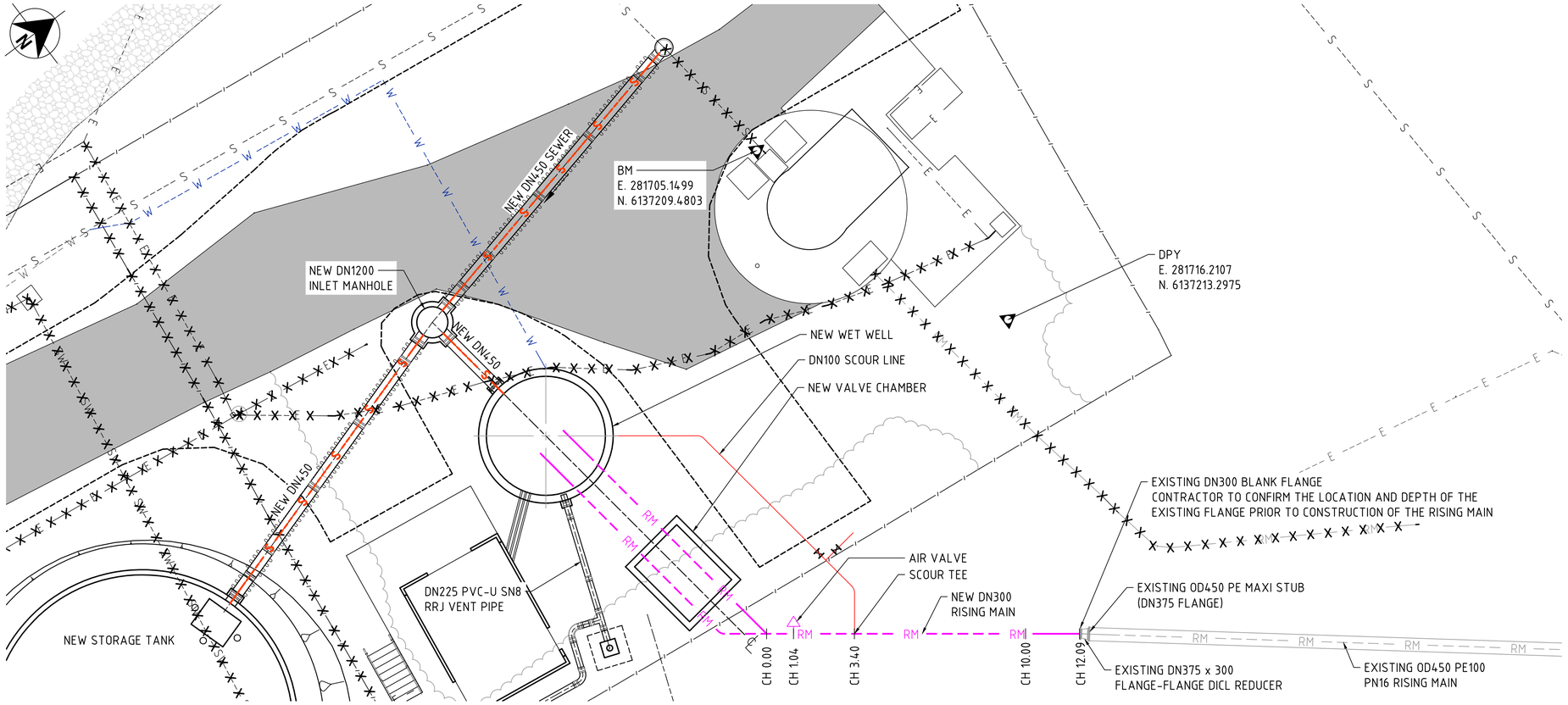

PLAN
SCALE 1:100

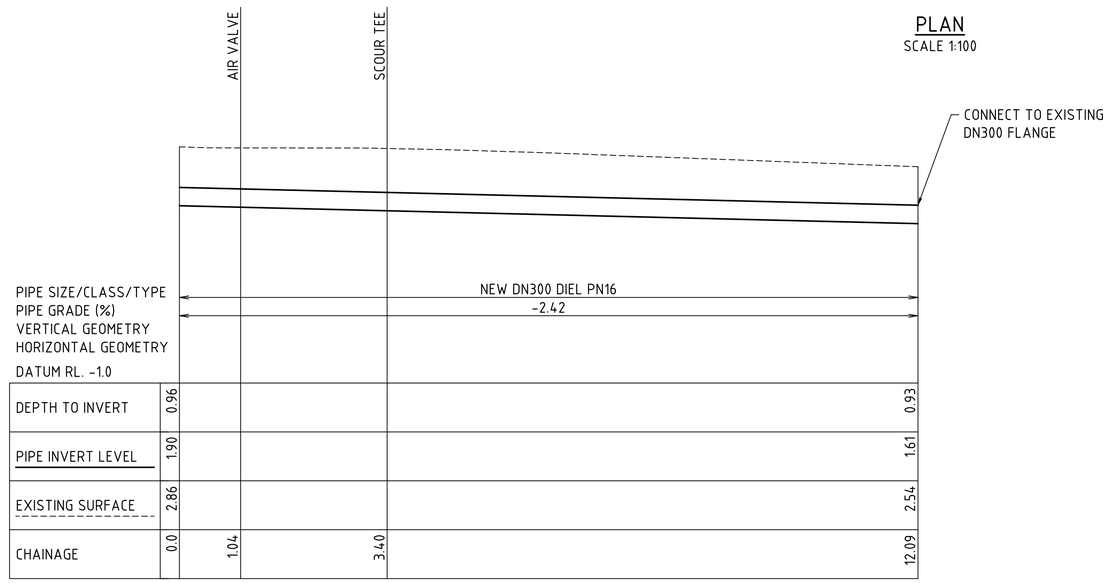

LONGITUDINAL SECTION
SCALE 1:50 H, 1:100V

LEGEND

- EXISTING RISING MAIN
- EXISTING SEWER MAIN
- EXISTING STORM WATER
- EXISTING DRAIN
- EXISTING WATER MAIN
- EXISTING ELECTRICITY BELOW GROUND
- EXISTING ELECTRICITY ABOVE GROUND
- EXISTING CONTOUR MAJOR
- EXISTING CONTOUR MINOR
- TO BE DECOMMISSIONED
- EXISTING FENCE
- NEW SEWER MAIN
- NEW STORM WATER
- NEW RISING MAIN
- NEW WATER SERVICE
- EDGE OF NEW ASPHALTIC CONCRETE SURFACE
- EDGE OF VEGETATION
- CONTROL POINTS
- SEWER MANHOLE
- EXISTING GRAVEL TRACK
- EXISTING ASPHALTIC CONCRETE

0 0.5 1.0 1.5 2.0 2.5m
SCALE 1:50 AT ORIGINAL SIZE

0 1 2 3 4 5m
SCALE 1:100 AT ORIGINAL SIZE

CAUTION
ASBESTOS HAZARDOUS DO NOT DISTURB WITHOUT PROPER TRAINING AND EQUIPMENT

DIAL BEFORE YOU DIG www.1100.com.au

WARNING
BEWARE OF UNDERGROUND SERVICES
THE LOCATION OF UNDERGROUND SERVICES ARE APPROXIMATE ONLY AND THEIR EXACT POSITION SHOULD BE PROVEN ON SITE. NO GUARANTEE IS GIVEN THAT ALL EXISTING SERVICES ARE SHOWN.

TENDER ISSUE
NOT FOR CONSTRUCTION

No.	REVISION DETAILS		
1	REISSUED FOR TENDER	RK	16.04.21
0	ISSUED FOR TENDER	CW	07.09.17

CONSULTANT DETAILS:
GHD
57 Graham Street Nowra NSW 2541
T 61 2 4424 4900 F 61 2 4424 4999
E noamail@ghd.com W www.ghd.com

CONSULTANT REFERENCE No. 24356-218

Shoalhaven Water
A Group of Shoalhaven City Council

DESIGNED: CW	DATE: 26.03.15	COMPANY: GHD	
DRAWN: JC	DATE: 26.03.15	COMPANY: GHD	
CHECKED: SR	DATE: 20.05.15	COMPANY: GHD	
APPROVED: CS	DATE: 07.09.17	COMPANY: GHD	

TITLE:
SHOALHAVEN WATER
LYREBIRD PARK NOWRA SPS2 UPGRADE

NEW RISING MAIN PLAN AND SECTION

SIZE	SCALE	INDEX No.	DRAWING No.	SHEET	REV No.
A1	AS SHOWN		24356	218	1

Plot Date: 15/04/21 - 21:30 Cad File: N:\AU\Wollongong\Projects\23\12540351\CADD\Drawings\Lyrebird\24356-218.dwg

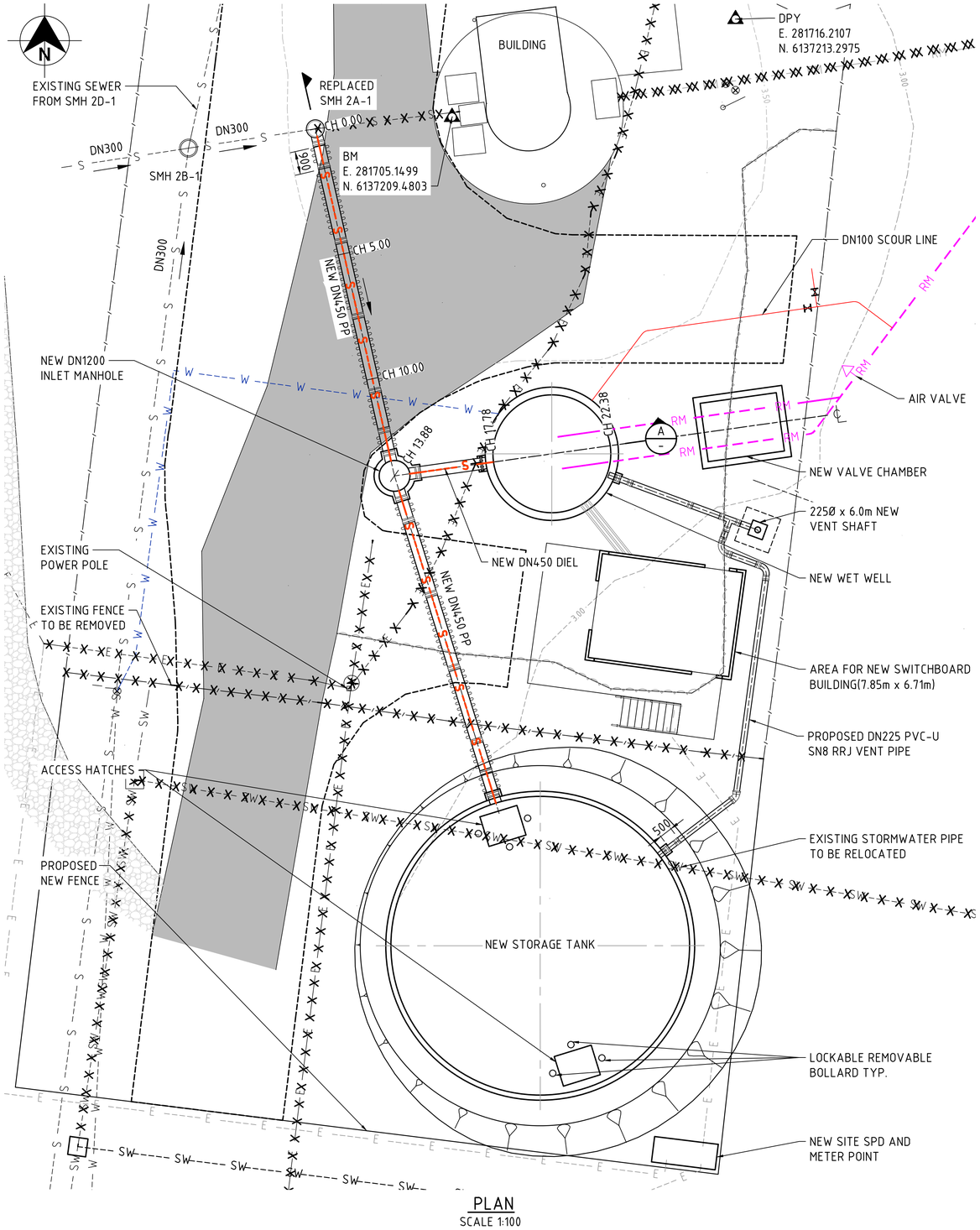

PLAN
SCALE 1:100

NOTES:

1. DRAWINGS SHALL NOT BE SCALED.
2. ALL DIMENSIONS ARE IN MILLIMETRES UNLESS OTHERWISE SPECIFIED.
3. MAINTENANCE HOLE DETAILS TO BE IN ACCORDANCE WITH WSA02-DRAWING SEW-1300SW. TYPE P2.
4. NEW MAINTENANCE HOLE OVER THE EXISTING SEWER TO BE CONSTRUCTED IN ACCORDANCE WITH SEW-1502 WITH REACTIVE BASE AND 600mm ROCKER PIPES.

LEGEND

- EXISTING RISING MAIN
- EXISTING SEWER MAIN
- EXISTING STORM WATER
- EXISTING DRAIN
- EXISTING WATER MAIN
- EXISTING ELECTRICITY BELOW GROUND
- EXISTING ELECTRICITY ABOVE GROUND
- EXISTING CONTOUR MAJOR
- EXISTING CONTOUR MINOR
- TO BE DECOMMISSIONED
- EXISTING FENCE
- NEW SEWER MAIN
- NEW STORM WATER
- NEW RISING MAIN
- NEW WATER SERVICE
- EDGE OF NEW ASPHALTIC CONCRETE SURFACE
- EDGE OF VEGETATION
- CONTROL POINTS
- SEWER MANHOLE
- EXISTING GRAVEL TRACK
- EXISTING ASPHALTIC CONCRETE

MAINTENANCE HOLE NUMBER

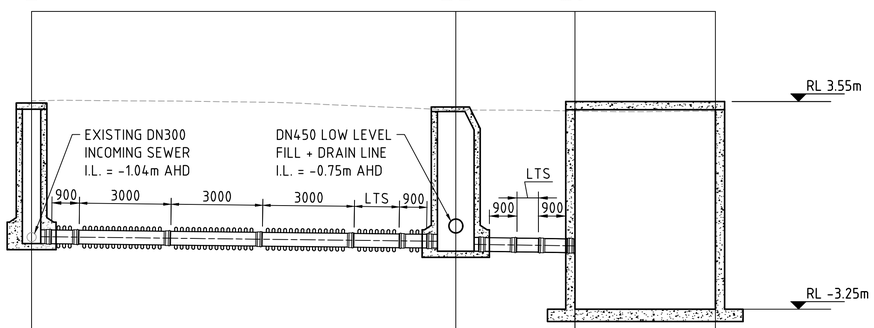

PIPE SIZE			DN450 PP SN10 RRJ		DN450 DIEL PN35
PIPE CLASS/TYPE					
GRADE			1.08%		1.28%
DATUM R.L.	-8.00				
DEPTH TO INVERT	4.730	4.517	4.617	4.950	6.800
PIPE INVERT LEVEL	-1.100	-1.250	-1.350	-1.400	-3.250
FINISHED SURFACE LEVEL	3.500		3.267	3.550	
EXISTING SURFACE LEVEL	3.573		3.267	3.239	
CHAINAGE	0.00		13.89	17.79	

A / - SECTION
SCALE 1 : 100H; 1 : 100V

0 1 2 3 4 5m
SCALE 1:100 AT ORIGINAL SIZE

WARNING
BEWARE OF UNDERGROUND SERVICES
THE LOCATION OF UNDERGROUND SERVICES ARE APPROXIMATE ONLY AND THEIR EXACT POSITION SHOULD BE PROVEN ON SITE. NO GUARANTEE IS GIVEN THAT ALL EXISTING SERVICES ARE SHOWN.

DIAL BEFORE YOU DIG www.1100.com.au

TENDER ISSUE
NOT FOR CONSTRUCTION

No.	REVISION DETAILS		
1	REISSUED FOR TENDER	RK	16.04.21
0	ISSUED FOR TENDER	CW	07.09.17

CONSULTANT DETAILS:
GHD
57 Graham Street Nowra NSW 2541
T 61 2 4424 4900 F 61 2 4424 4999
E noamail@ghd.com W www.ghd.com

CONSULTANT REFERENCE No. 24356-219

Shoalhaven Water
A Group of Shoalhaven City Council

DESIGNED: CW	DATE: 26.03.15	COMPANY: GHD	
DRAWN: JC	DATE: 26.03.15	COMPANY: GHD	
CHECKED: SR	DATE: 20.05.15	COMPANY: GHD	
APPROVED: CS	DATE: 07.09.17	COMPANY: GHD	

TITLE:
SHOALHAVEN WATER
LYREBIRD PARK NOWRA SPS2 UPGRADE

NEW GRAVITY MAIN SECTION

SIZE	SCALE	INDEX No.	DRAWING No.	SHEET	REV No.
A1	1 : 100		24356	219	1

Plot Date: 15/04/21 - 21:30 Cad File: N:\AU\Wollongong\Projects\23\12540351\CADD\Drawings\Lyrebird\24356-219.dwg

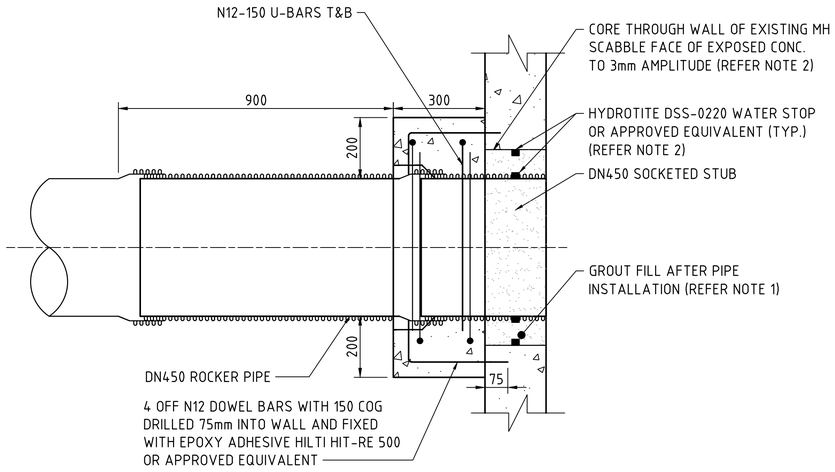

TYPICAL DETAIL PIPE CONNECTION TO MAINTENANCE HOLE

SCALE 1:10

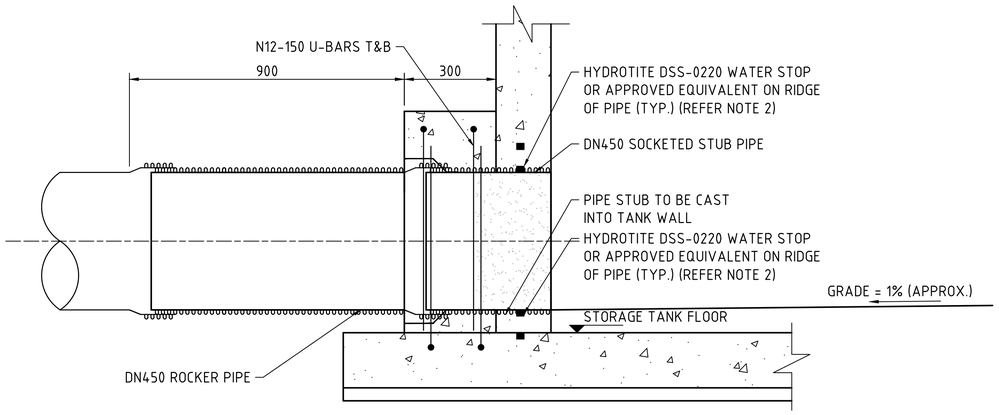

EMERGENCY STORAGE TANK AND NEW MAINTENANCE HOLE CONNECTION DETAIL

SCALE 1:10

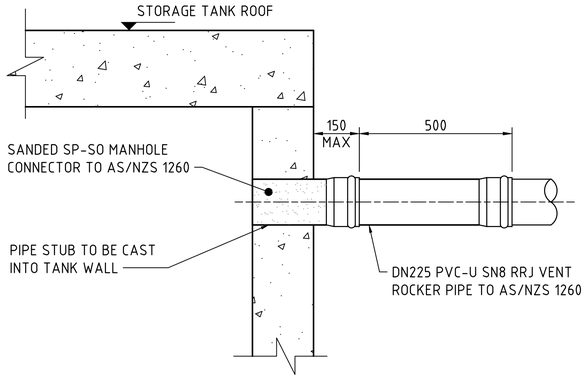

VENT PIPE CONNECTION TO STORAGE TANK DETAIL

SCALE 1:10

NOTES:

1. GROUT TO BE MASTERFLOW 830 OR APPROVED EQUIVALENT. GROUT SUPPLIER SHALL ENSURE GROUT CAN FULLY FILL PENETRATION CREATING A WATERTIGHT CONCRETE BARRIER.
2. MAINTAIN 75mm COVER TO WATERSTOP. WATERSTOP TO BE SECURED AND INSTALLED TO MANUFACTURERS RECOMMENDATION.

0 0.1 0.2 0.3 0.4 0.5m

SCALE 1:10 AT ORIGINAL SIZE

TENDER ISSUE
NOT FOR CONSTRUCTION

No.	REVISION DETAILS		
1	REISSUED FOR TENDER	RK	16.04.21
0	ISSUED FOR TENDER	CW	07.09.17

CONSULTANT DETAILS:
GHD
57 Graham Street Nowra NSW 2541
T 61 2 4424 4900 F 61 2 4424 4999
E noamail@ghd.com W www.ghd.com

CONSULTANT REFERENCE No.
23-1426651-00

Shoalhaven Water
A Group of Shoalhaven City Council

DESIGNED: CW	DATE: 26.03.15	COMPANY: GHD	
DRAWN: JC	DATE: 16.07.15	COMPANY: GHD	
CHECKED: SR	DATE: 20.05.15	COMPANY: GHD	
APPROVED: CS	DATE: 07.09.17	COMPANY: GHD	

TITLE:
SHOALHAVEN WATER
LYREBIRD PARK NOWRA SPS2 UPGRADE

STORAGE TANK AND MANHOLE CONNECTION DETAILS

SIZE	SCALE	INDEX No.	DRAWING No.	SHEET	REV No.
A1	1 : 10		24356	220	1

Plot Date: 15/04/21 - 21:30 Cad File: N:\AU\Wollongong\Projects\23\12540351\CADD\Drawings\Lyrebird\24356-220.dwg

NOTES:

1. FOR GENERAL NOTES REFER DRG Nos. 24356-203 TO 204.
2. GRADE OF CONCRETE - S40
3. MINIMUM ALLOWABLE SAFE BEARING CAPACITY - 200kPa
4. INTERNAL CONCRETE COVER FOR WET WELL - 75mm
   CONCRETE COVER FOR ALL OTHER FACES - 50mm
5. FOR PIPE PENETRATION LOCATIONS REFER DRG No. 24356-215 AND 24356-216.

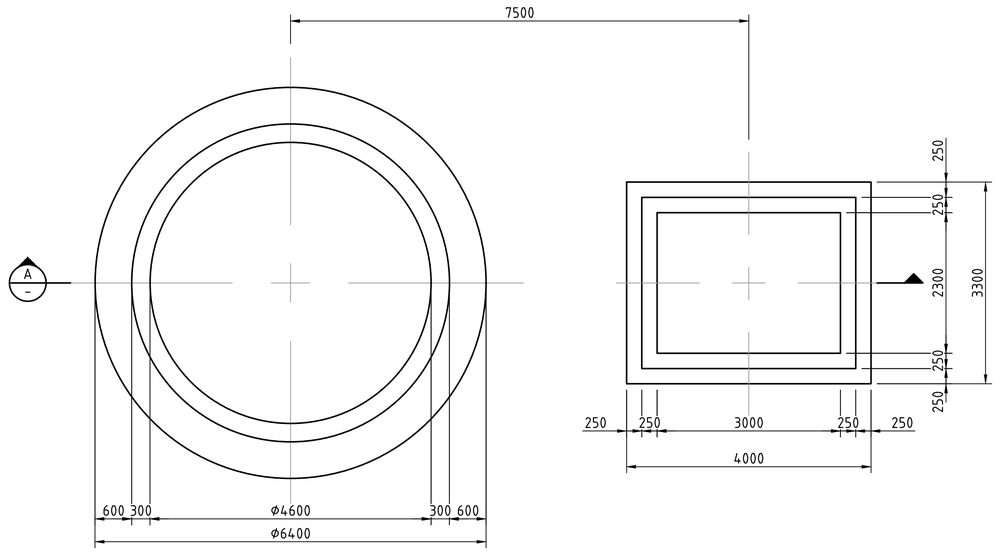

PUMP STATION AND VALVE CHAMBER - PLAN

SCALE 1:50

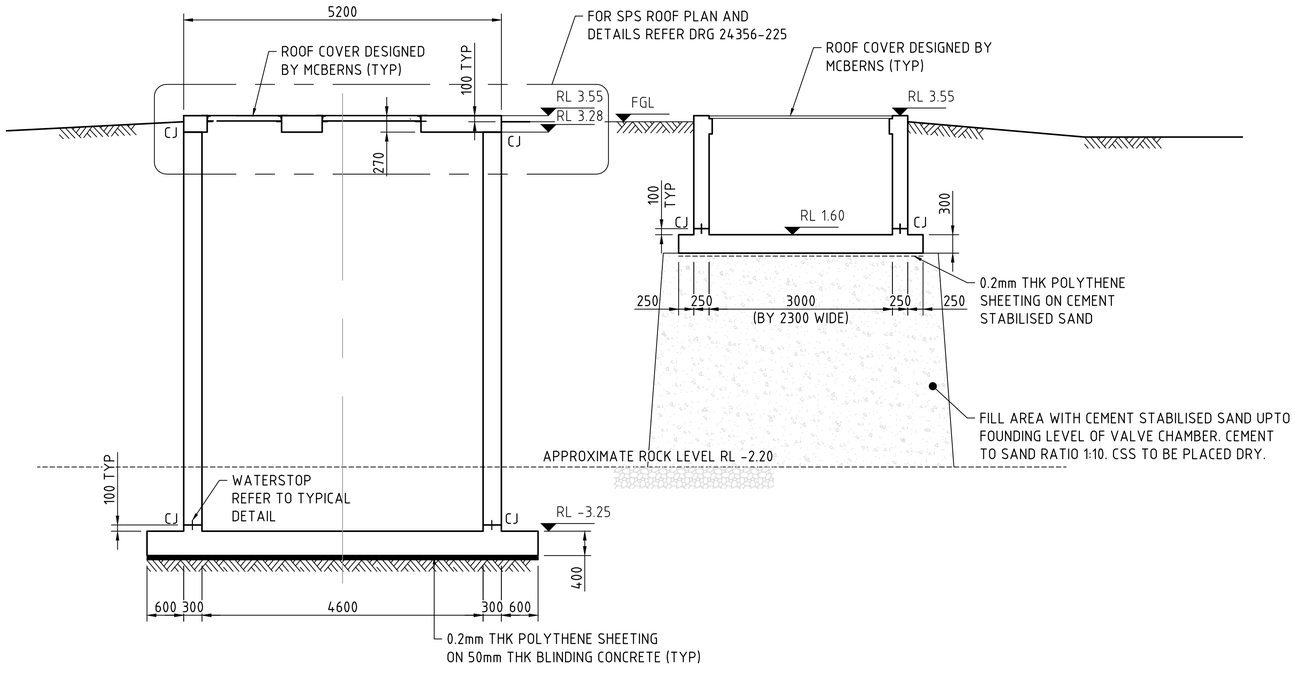

A - SECTION

SCALE 1:50

0 500 1000 1500 2000 2500mm

SCALE 1:50 AT ORIGINAL SIZE

TENDER ISSUE
NOT FOR CONSTRUCTION

No.	REVISION DETAILS		
1	REISSUED FOR TENDER	RK	16.04.21
0	ISSUED FOR TENDER	CW	07.09.17

CONSULTANT DETAILS:
GHD
57 Graham Street Nowra NSW 2541
T 61 2 4424 4900 F 61 2 4424 4999
E noamail@ghd.com W www.ghd.com

CONSULTANT REFERENCE No. 24356-223

Shoalhaven Water
A Group of Shoalhaven City Council

DESIGNED: AD	DATE: 20.04.15	COMPANY: GHD	
DRAWN: MC	DATE: 14.07.15	COMPANY: GHD	
CHECKED: SR	DATE: 20.05.15	COMPANY: GHD	
APPROVED: CS	DATE: 07.09.17	COMPANY: GHD	

TITLE:
SHOALHAVEN WATER
LYREBIRD PARK NOWRA SPS2 UPGRADE

SPS AND VALVE CHAMBER
CONCRETE PLANS AND SECTIONS

SIZE:	SCALE:	INDEX No.	DRAWING No.	SHEET	REV No.
A1	1 : 50		24356	223	1

Plot Date: 15/04/21 - 21:30 Cad File: N:\AU\Wollongong\Projects\23\12540351\CADD\Drawings\Lyrebird\24356-223.dwg

NOTES:

1. WET WELL TOE NOT SHOWN FOR CLARITY.
2. REFER TO DRG Nos. 24356-203 AND 24356-204 FOR STRUCTURAL NOTES.
3. MASS CONCRETE BENCHING IN VALVE CHAMBER TO BE GRADE N15 AND HAVE 2% FALL TOWARDS SUMP DRAIN.
4. MINIMUM BENCHING SLOPE IN WET WELL TO BE 1 IN 6 AROUND WET WELL. PERIMETER BENCHING LEVEL SHALL FINISH AT IL -2.85m AHD AND SLOPE OF BENCHING SHALL VARY TO ACHIEVE THIS.
5. BOLTS FOR FIXING PUMP TO WET WELL FLOOR SHALL BE STAINLESS STEEL 316, MIN. EMBEDMENT DEPTH OF 200mm FIXED WITH HILTI HIT RE-500 EPOXY OR APPROVED EQUIVALENT.
6. 225mm CLEARANCE TO BE PROVIDED BETWEEN START OF BENCHING AND EDGE OF PUMPS. REFER TO DRG No. 24356-215 FOR PUMP SET OUT POINTS.

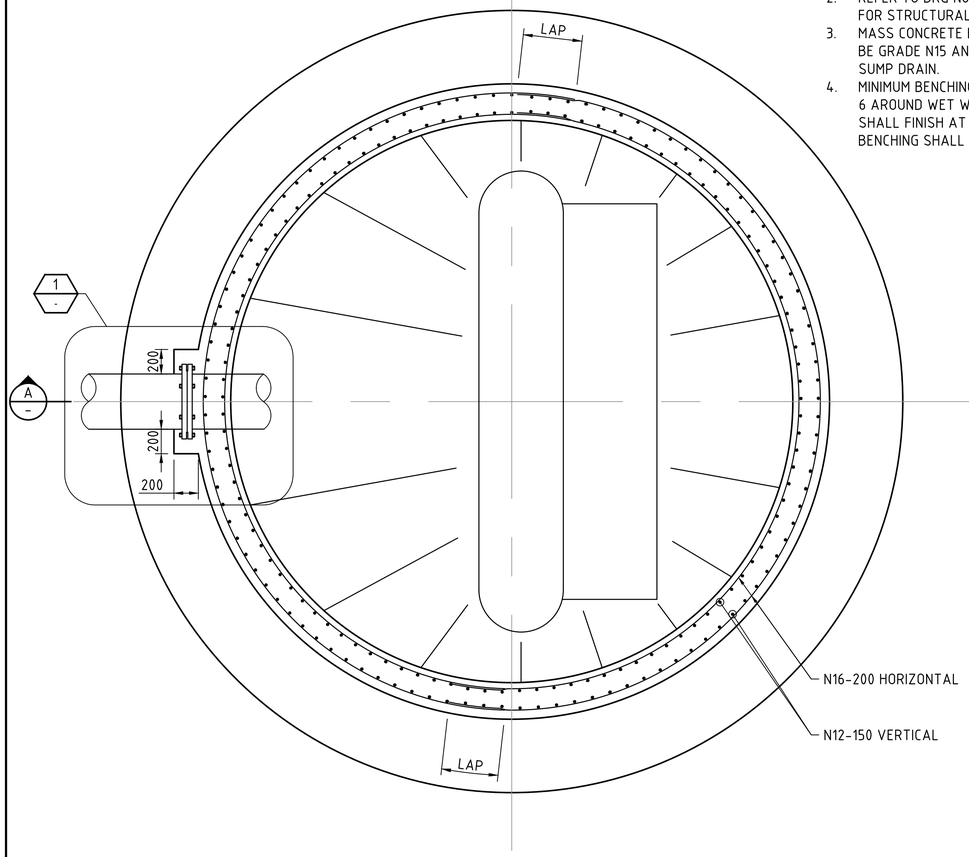

PUMP STATION - REINFOCEMENT PLAN
SCALE 1:25

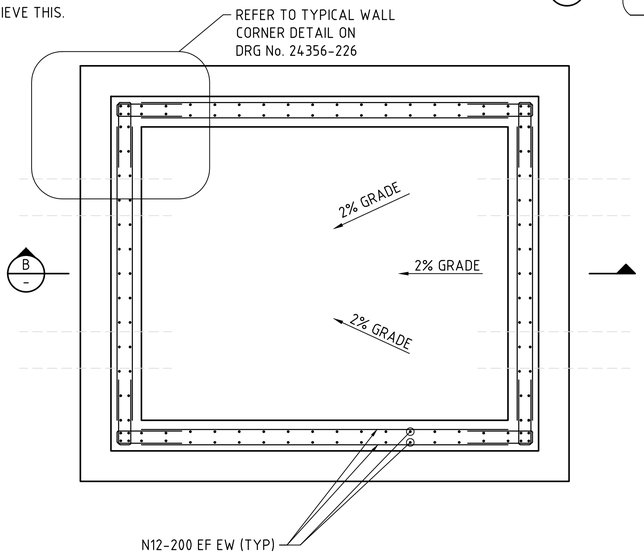

VALVE CHAMBER - REINFORCEMENT PLAN
SCALE 1:25

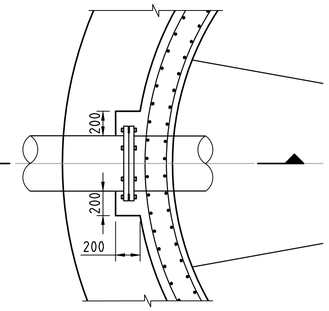

1 DETAIL
SCALE 1 : 25

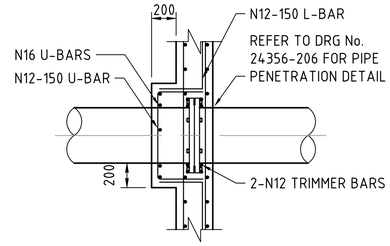

D SECTION
SCALE 1 : 25

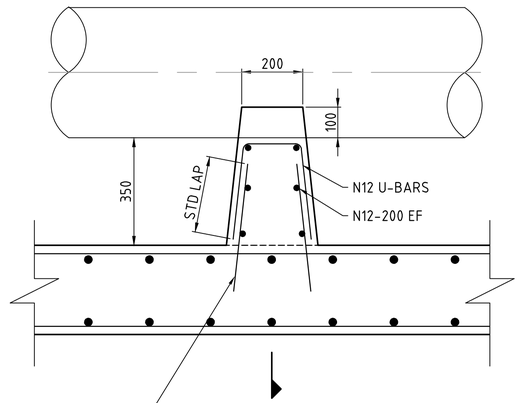

PIPE SUPPORT REINFORCEMENT DETAIL
SCALE 1:10

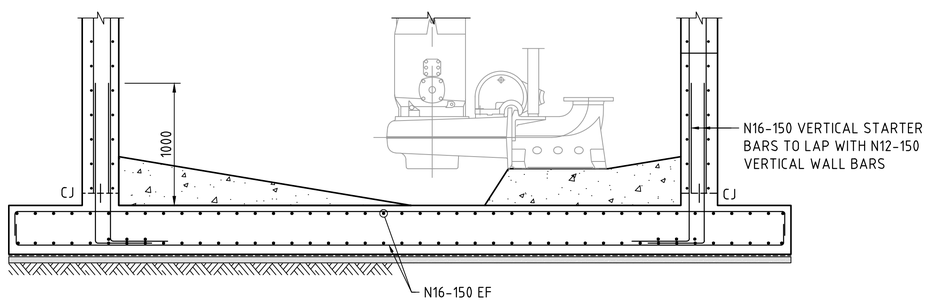

A SECTION
SCALE 1 : 25

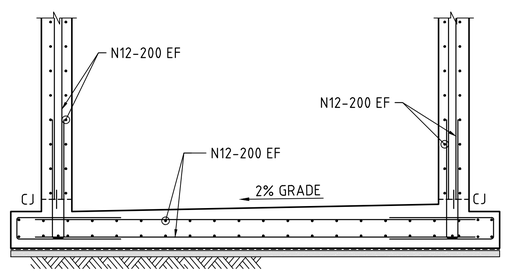

B SECTION
SCALE 1 : 25

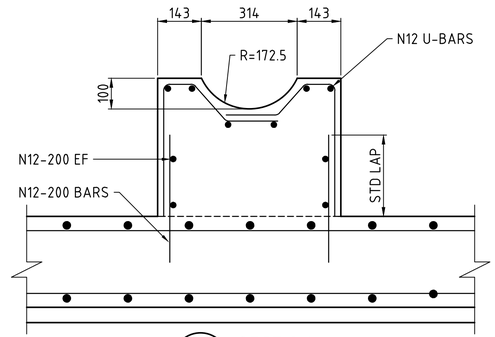

C SECTION
SCALE 1 : 10

0 250 500 750 1000 1250mm
SCALE 1:25 AT ORIGINAL SIZE

0 100 200 300 400 500mm
SCALE 1:10 AT ORIGINAL SIZE

TENDER ISSUE
NOT FOR CONSTRUCTION

No.	REVISION DETAILS		
1	REISSUED FOR TENDER	RK	16.04.21
0	ISSUED FOR TENDER	CW	07.09.17

CONSULTANT DETAILS:
GHD
57 Graham Street Nowra NSW 2541
T 61 2 4424 4900 F 61 2 4424 4999
E noamail@ghd.com W www.ghd.com

CONSULTANT REFERENCE No. 24356-224

Shoalhaven Water
A Group of Shoalhaven City Council

DESIGNED: AD	DATE: 20.04.15	COMPANY: GHD	
DRAWN: MC	DATE: 14.07.15	COMPANY: GHD	
CHECKED: SR	DATE: 20.05.15	COMPANY: GHD	
APPROVED: CS	DATE: 07.09.17	COMPANY: GHD	

TITLE:
SHOALHAVEN WATER
LYREBIRD PARK NOWRA SPS2 UPGRADE

SPS AND VALVE CHAMBER
CONCRETE PLANS AND SECTIONS

SIZE	SCALE	INDEX No.	DRAWING No.	SHEET	REV No.
A1	AS SHOWN		24356	224	1

Plot Date: 15/04/21 - 21:30 Cad File: N:\AU\Wollongong\Projects\23\12540351\CADD\Drawings\Lyrebird\24356-224.dwg

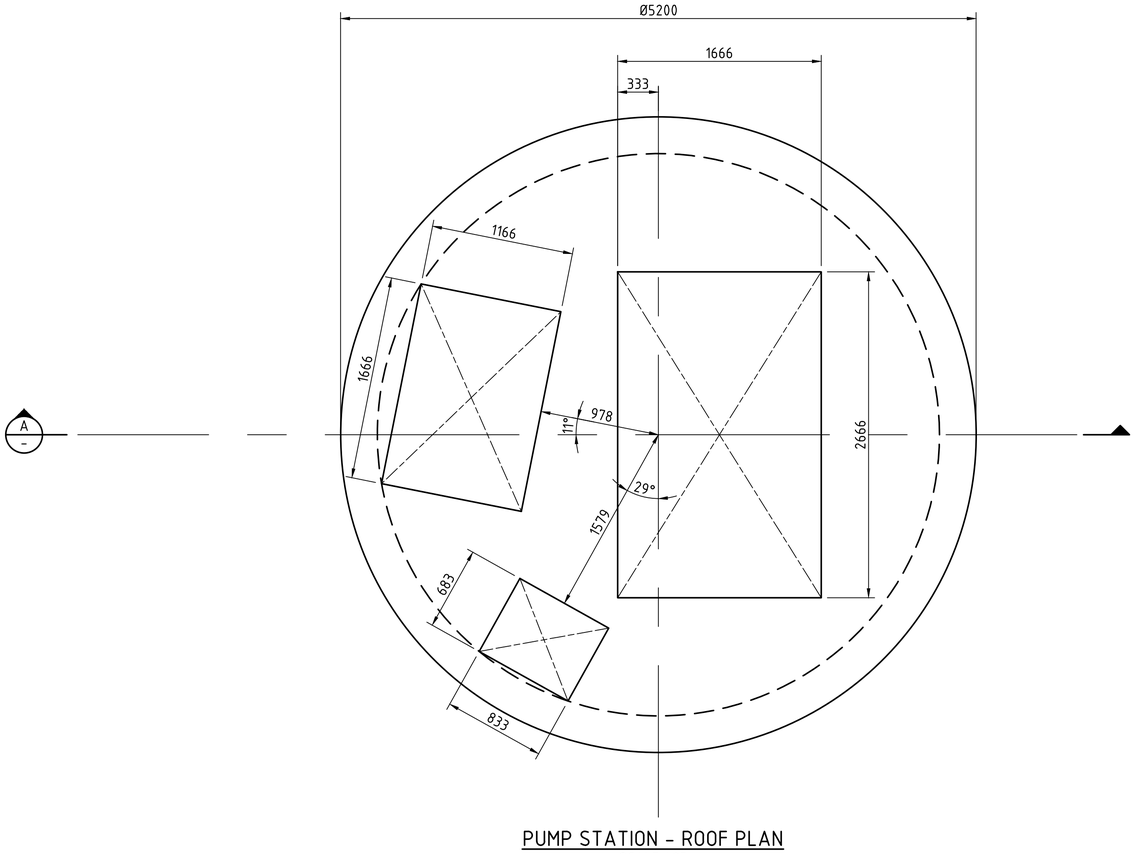

PUMP STATION - ROOF PLAN
SCALE 1:25

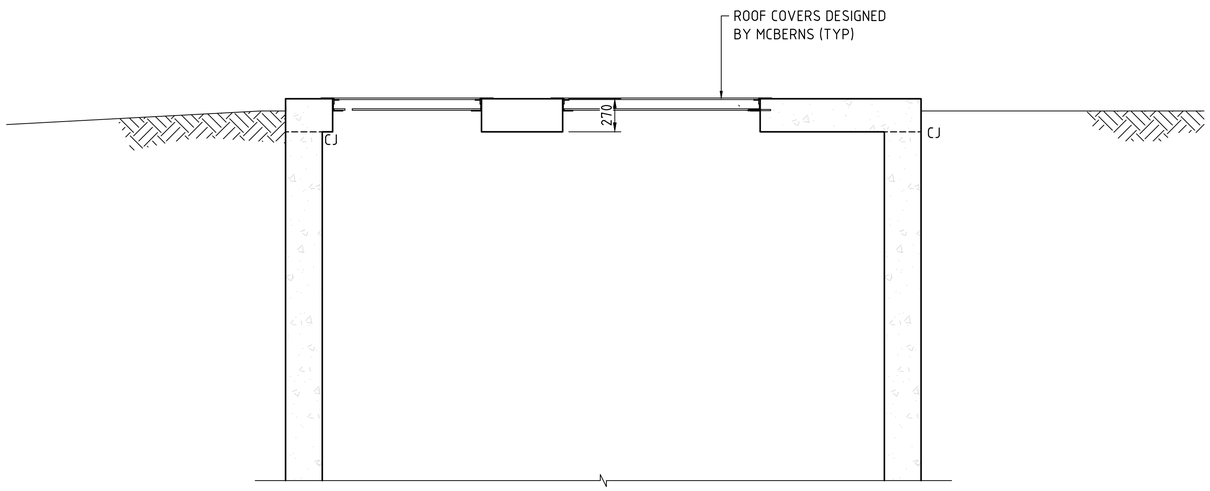

A SECTION
SCALE 1 : 25

NOTE:
1. FOR NOTES REFER DRG No. 24356-223.

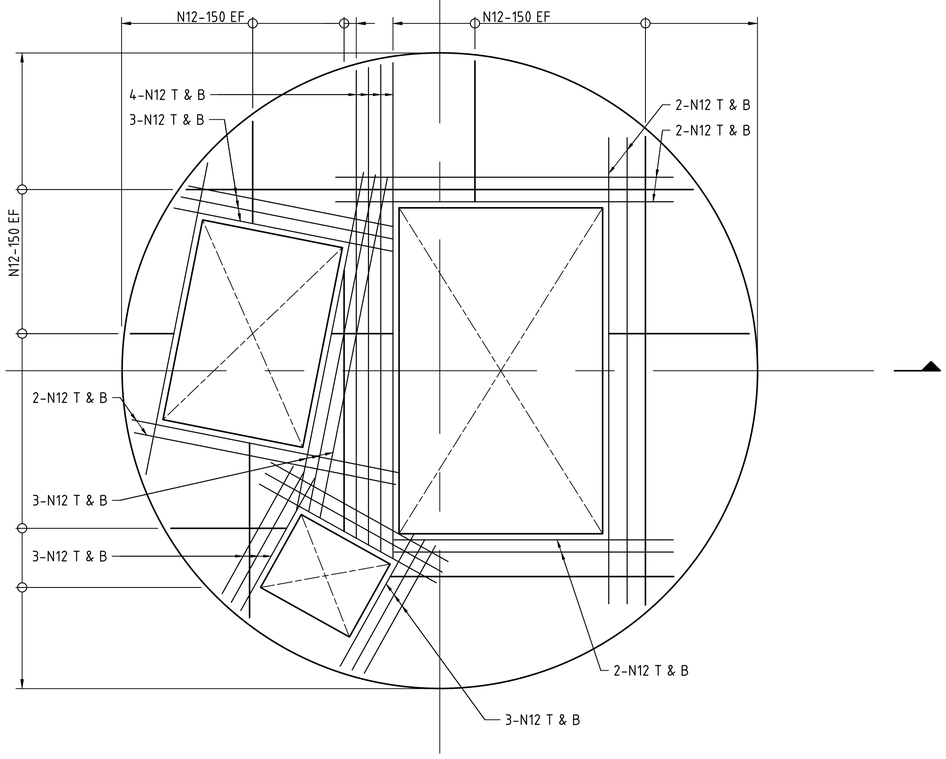

REINFORCEMENT PLAN
SCALE 1:25

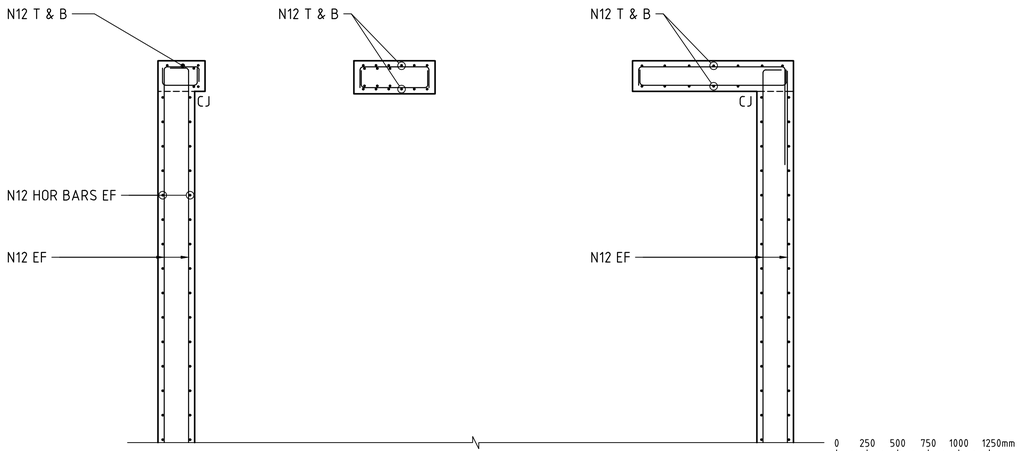

B SECTION
SCALE 1 : 25

SCALE 1:25 AT ORIGINAL SIZE

TENDER ISSUE
NOT FOR CONSTRUCTION

No.	REVISION DETAILS		
1	REISSUED FOR TENDER	RK	16.04.21
0	ISSUED FOR TENDER	CW	07.09.17

CONSULTANT DETAILS:
GHD
57 Graham Street Nowra NSW 2541
T 61 2 4424 4900 F 61 2 4424 4999
E noamail@ghd.com W www.ghd.com

CONSULTANT REFERENCE No.
24356-225

Shoalhaven Water
A Group of Shoalhaven City Council

DESIGNED: AD	DATE: 29.06.15	COMPANY: GHD	
DRAWN: HA	DATE: 15.07.15	COMPANY: GHD	
CHECKED: SH	DATE: 02.07.15	COMPANY: GHD	
APPROVED: CS	DATE: 07.09.17	COMPANY: GHD	

TITLE:
SHOALHAVEN WATER
LYREBIRD PARK NOWRA SPS2 UPGRADE

SPS AND VALVE CHAMBER
ROOF PLAN AND DETAILS

SIZE:	SCALE:	INDEX No.	DRAWING No.	SHEET	REV No.
A1	AS SHOWN		24356	225	1

Plot Date: 15/04/21 - 21:30 Cad File: N:\AU\Wollongong\Projects\23\12540351\CADD\Drawings\Lyrebird\24356-225.dwg

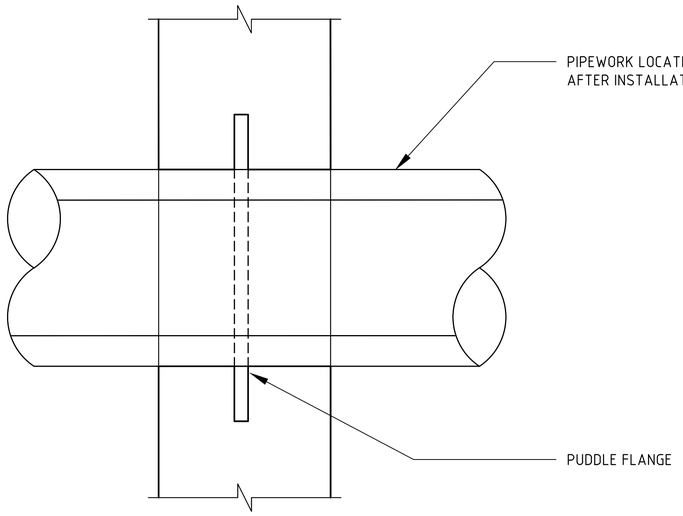

SECTION

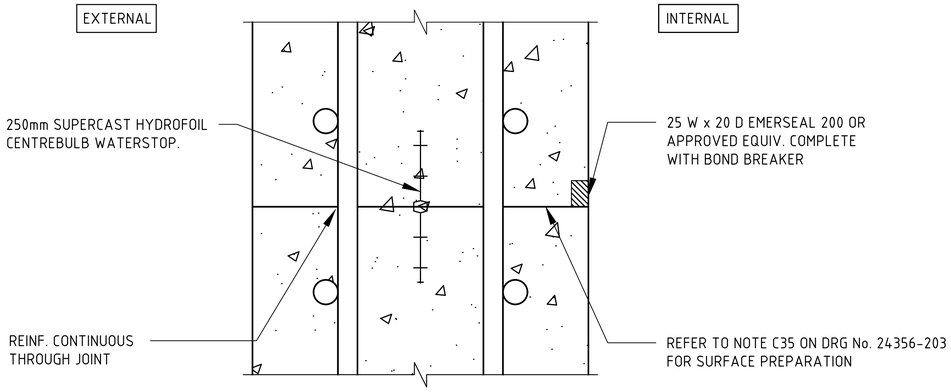

WALL HORIZONTAL CONSTRUCTION JOINT DETAIL
SCALE N.T.S.

NOTE A:

FOR EVERY TWO TERMINATED HORIZONTAL BARS PROVIDE ONE ADDITIONAL HORIZONTAL BAR EACH SIDE OF PENETRATION (BUNDLED TO TYPICAL WALL REINFORCEMENT). BAR LENGTH TO BE PENETRATION WIDTH AND TWO LAP LENGTHS.

NOTE B:

FOR EVERY TWO TERMINATED VERTICAL BARS, PROVIDE ONE ADDITIONAL FULL HEIGHT VERTICAL BAR AND STARTER BAR EACH SIDE OF PENETRATION BLOCKOUT (BUNDLED TO TYPICAL WALL REINFORCEMENT) TO PROVIDE 100% COMPENSATION FOR CURTAILED REINFORCEMENT.

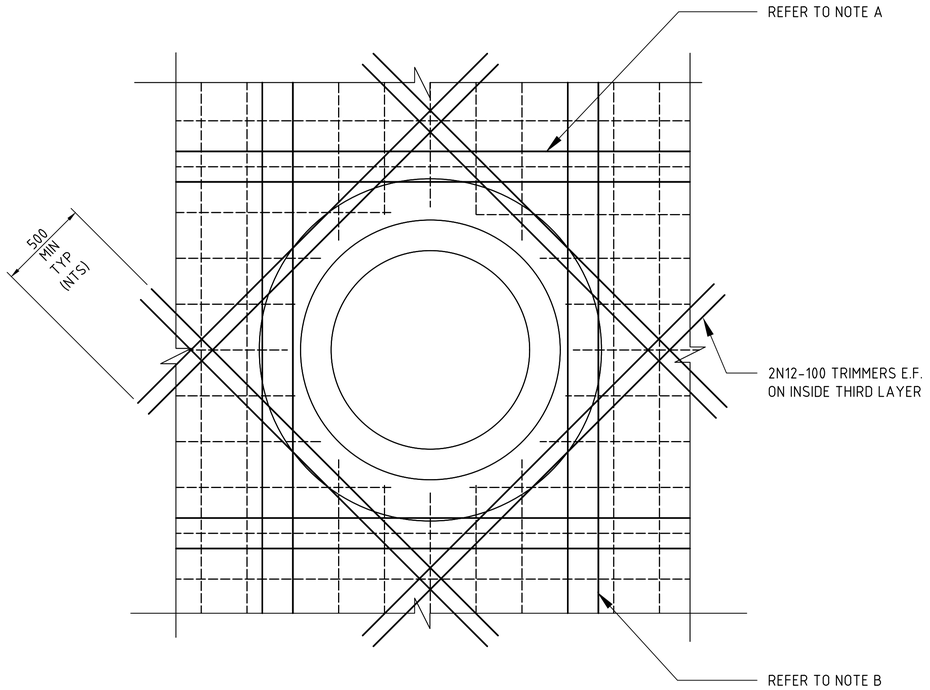

ELEVATION

PIPE CAST-IN DETAIL (WITH PUDDLE FLANGE)
SCALE 1:20

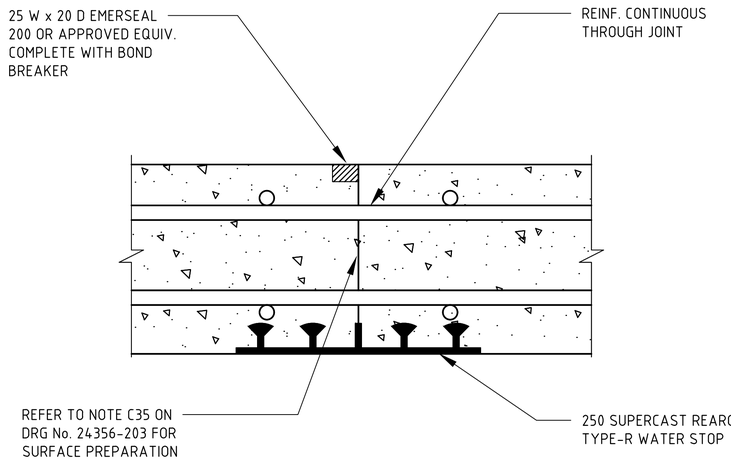

SLAB CONSTRUCTION JOINT DETAIL
SCALE N.T.S.

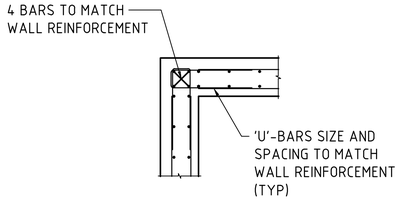

TYPICAL WALL CORNER DETAIL FOR VALVE CHAMBER
SCALE 1:20

0 200 400 600 800 1000mm
SCALE 1:20 AT ORIGINAL SIZE

TENDER ISSUE
NOT FOR CONSTRUCTION

No.	REVISION DETAILS		
1	REISSUED FOR TENDER	RK	16.04.21
0	ISSUED FOR TENDER	CW	07.09.17

CONSULTANT DETAILS:
GHD
57 Graham Street Nowra NSW 2541
T 61 2 4424 4900 F 61 2 4424 4999
E noamail@ghd.com W www.ghd.com

CONSULTANT REFERENCE No.
24356-226

Shoalhaven Water
A Group of Shoalhaven City Council

DESIGNED: AD	DATE: 20.04.15	COMPANY: GHD	
DRAWN: MC	DATE: 14.07.15	COMPANY: GHD	
CHECKED: SR	DATE: 20.05.15	COMPANY: GHD	
APPROVED: CS	DATE: 07.09.17	COMPANY: GHD	

TITLE:
SHOALHAVEN WATER
LYREBIRD PARK NOWRA SPS2 UPGRADE

TYPICAL STRUCTURAL DETAILS

SIZE:	SCALE:	INDEX No.	DRAWING No.	SHEET	REV No.
A1	AS SHOWN		24356	226	1

Plot Date: 15/04/21 - 21:30 Cad File: N:\AU\Wollongong\Projects\23\12540351\CADD\Drawings\Lyrebird\24356-226.dwg

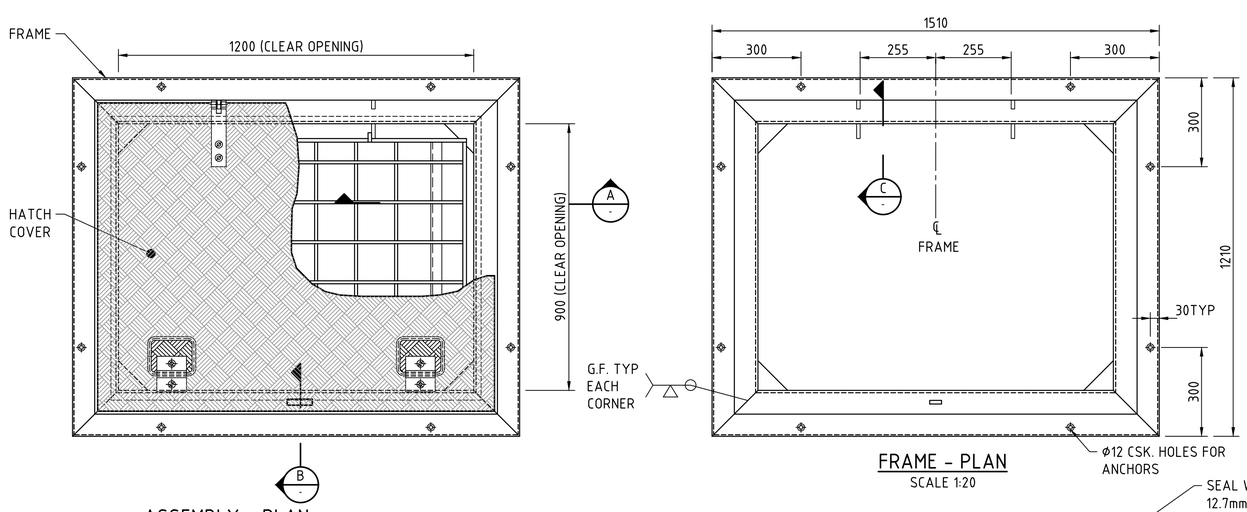

ASSEMBLY - PLAN
SCALE 1:20

FRAME - PLAN
SCALE 1:20

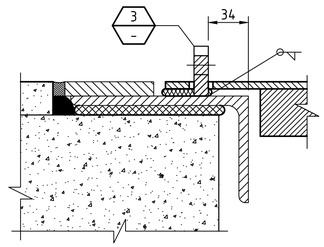

B SECTION
SCALE 1:5

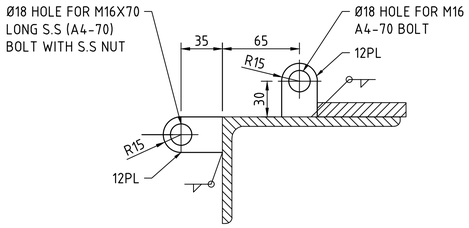

C SECTION
SCALE 1:5

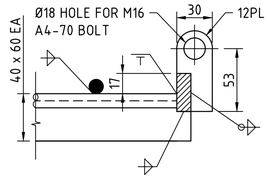

D SECTION
SCALE 1:5

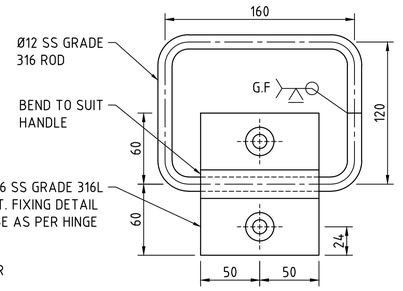

1 DETAIL
SCALE 1:5

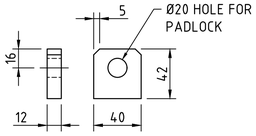

3 DETAIL
SCALE 1:5

NOTES:

1. COVER IS CLASSIFIED LIGHT DUTY.
2. ALL COMPONENTS ASSOCIATED WITH THE FRAME & SAFETY GRILLE TO BE STAINLESS STEEL 316 & COVERS TO BE ALUMINIUM, UNLESS NOTED OTHERWISE.
3. N12 SAFETY GRILLE BARS TO BE STAINLESS STEEL GRADE 316 RIBBED REINFORCEMENT BARS WITH A MINIMUM 0.2% PROOF STRESS OF 500MPa.
4. ALL WELDS TO BE 6mm CONTINUOUS FILLET WELDS UNLESS NOTED OTHERWISE
5. COVERS HAVE BEEN DESIGNED FOR A LIVE LOAD OF 2.5 kPa AS PER AS 1657
6. GROUT TO BE MASTERFLOW 830 OR APPROVED EQUIVALENT. GROUT SUPPLIER SHALL ENSURE GROUT CAN FULLY FILL PENETRATION CREATING A WATERTIGHT CONCRETE BARRIER.
7. MAINTAIN 75mm COVER TO WATERSTOP. WATERSTOP TO BE SECURED AND INSTALLED TO MANUFACTURERS RECOMMENDATION.

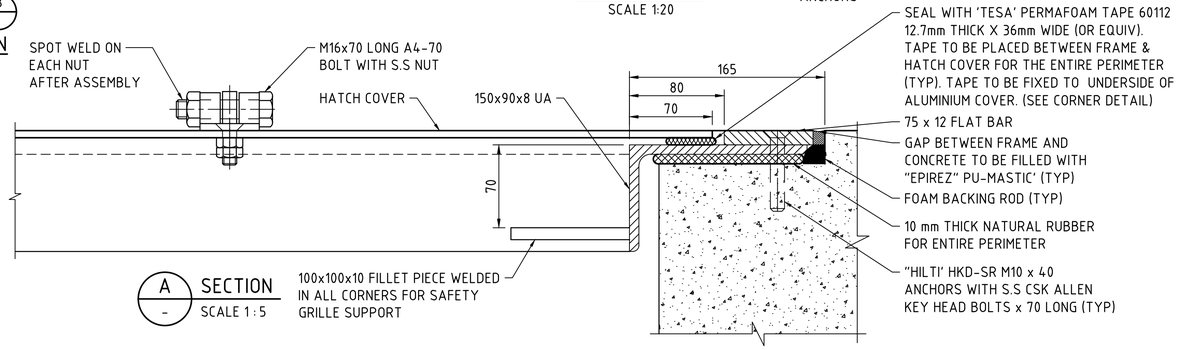

A SECTION
SCALE 1:5

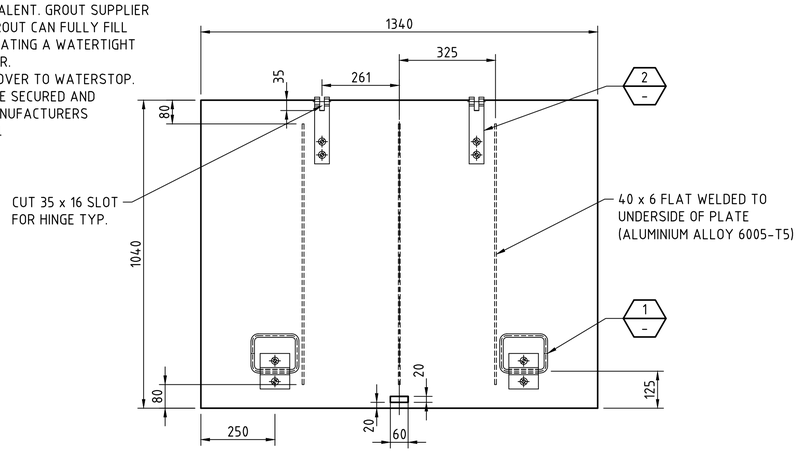

HATCH COVER - PLAN
SCALE 1:20

6 BASE THICKNESS TREAD PLATE
MATERIAL: ALUMINIUM ALLOY 5251
WEIGHT: 24.6 kg
(INCLUDING REINFORCING STRIPS BUT EXCLUDING HINGES & LIFTING HANDLES)

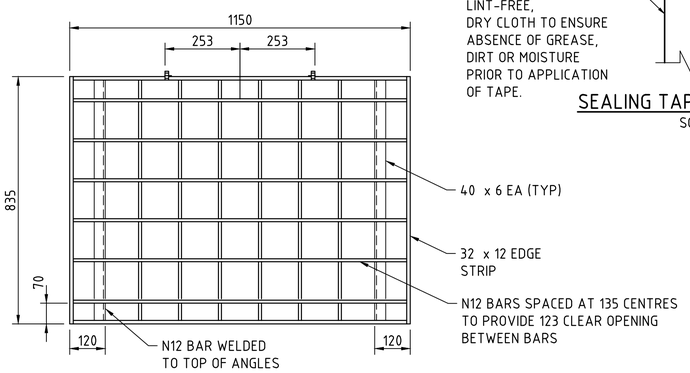

GRILLE - PLAN
SCALE 1:20

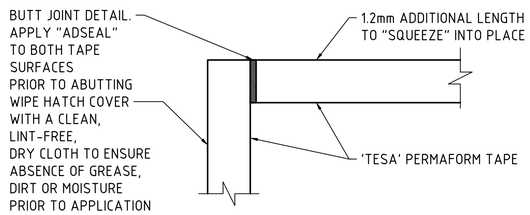

SEALING TAPE CORNER DETAIL
SCALE 1:20

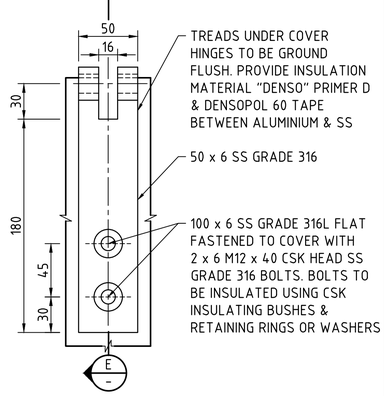

2 DETAIL
SCALE 1:5

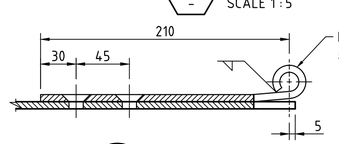

E SECTION
SCALE 1:5

0 0.05 0.1 0.15 0.2 0.25m
SCALE 1:5 AT ORIGINAL SIZE

0 0.2 0.4 0.6 0.8 1.0m
SCALE 1:20 AT ORIGINAL SIZE

TENDER ISSUE
NOT FOR CONSTRUCTION

No.	REVISION DETAILS		
1	REISSUED FOR TENDER	RK	16.04.21
0	ISSUED FOR TENDER	CW	07.09.17

CONSULTANT DETAILS:
GHD
57 Graham Street Nowra NSW 2541
T 61 2 4424 4900 F 61 2 4424 4999
E noamail@ghd.com W www.ghd.com

CONSULTANT REFERENCE No.
23-1426651-00

Shoalhaven Water
A Group of Shoalhaven City Council

DESIGNED: CW	DATE: 26.03.15	COMPANY: GHD	
DRAWN: JC	DATE: 16.07.15	COMPANY: GHD	
CHECKED: SR	DATE: 20.05.15	COMPANY: GHD	
APPROVED: CS	DATE: 07.09.17	COMPANY: GHD	

TITLE:
SHOALHAVEN WATER
LYREBIRD PARK NOWRA SPS2 UPGRADE

EMERGENCY STORAGE TANK ACCESS HATCH DETAILS

SIZE	SCALE	INDEX No.	DRAWING No.	SHEET	REV No.
A1	AS SHOWN		24356	230	1

Plot Date: 15/04/21 - 21:30 Cad File: N:\AU\Wollongong\Projects\23\12540351\CADD\Drawings\Lyrebird\24356-230.dwg

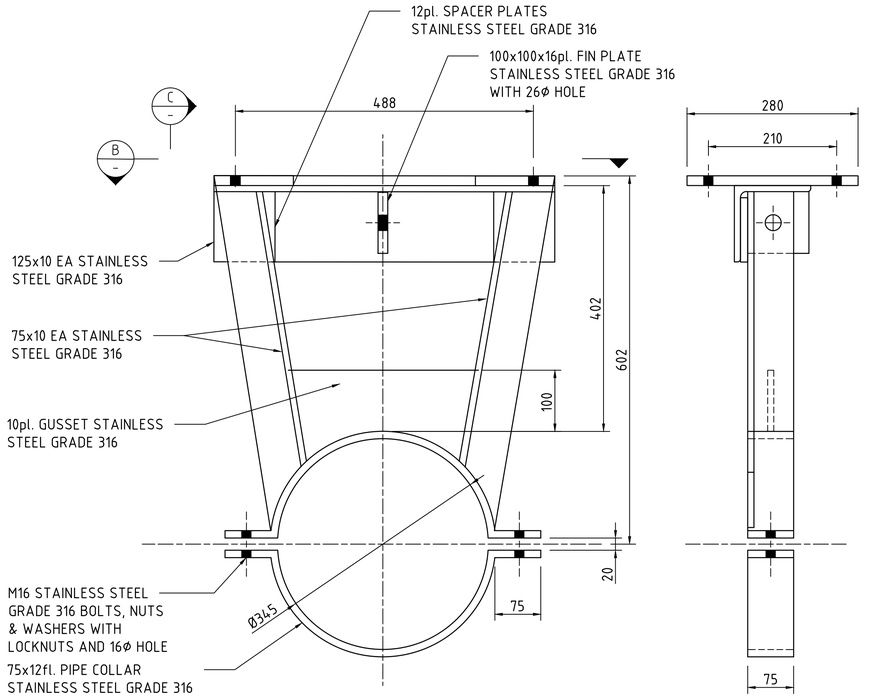

NEW PIPE BRACKET DETAIL
SCALE 1:5

C – SECTION
SCALE 1:5

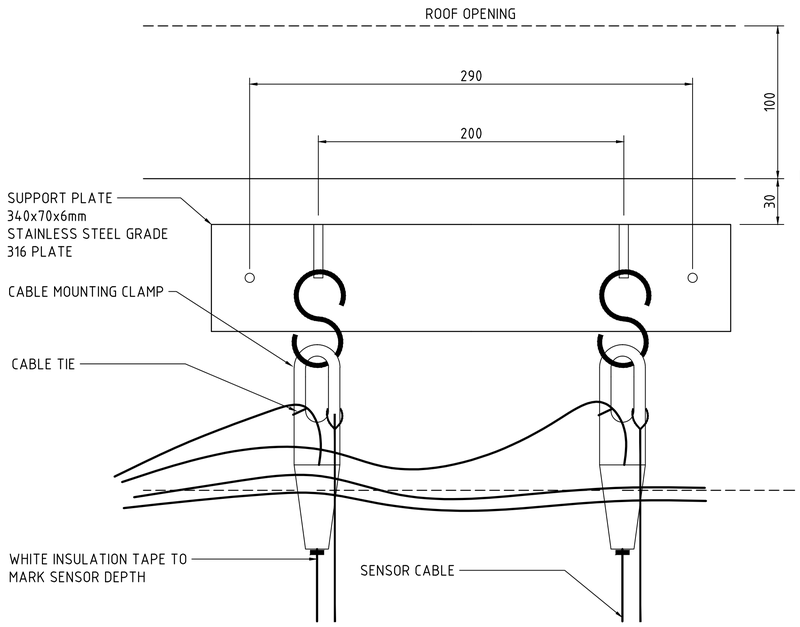

LEVEL SENSOR MOUNTING AND
SUPPORT BRACKET DETAIL FRONT VIEW
SCALE 1:2

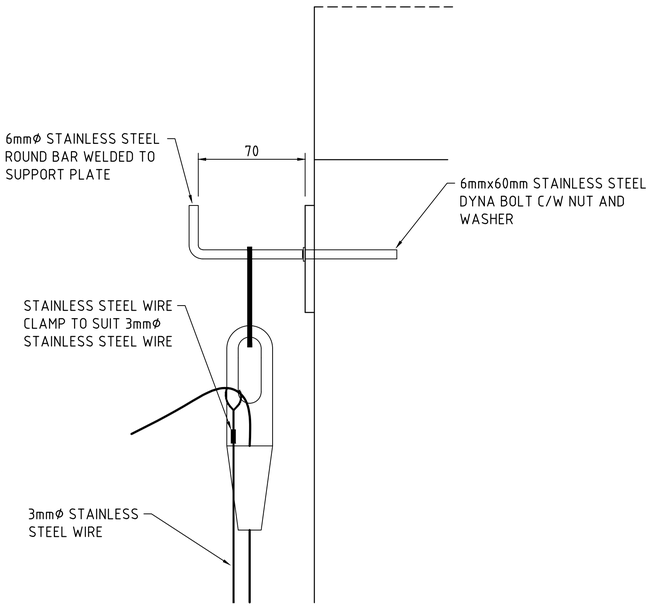

LEVEL SENSOR MOUNTING AND
SUPPORT BRACKET DETAIL SIDE VIEW
SCALE 1:2

130x16fl. BASEPLATE, STAINLESS STEEL GRADE 316
2-M12 STAINLESS STEEL GRADE 316 BOLTS WITH STAINLESS STEEL LOCKING WASHER & 40x40x10pl. WASHER WITH CENTRAL 14ø HOLE. BOLTS TO BE TORQUED TO MANUFACTURER'S SPECIFICATION. PROVIDE ISOLATOR WASHERS BETWEEN BOLTS AND BASE PLATE. BOLT EMBEDMENT DEPTH TO BE 110mm FIXED WITH HILTI HIT RE-500 EPOXY OR APPROVED EQUIVALENT

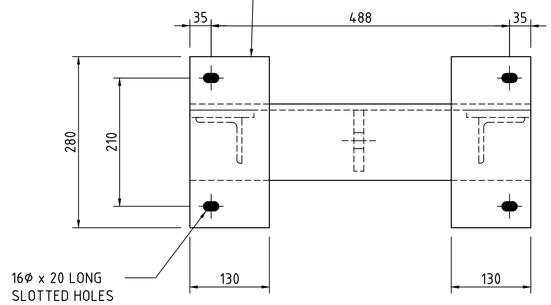

B – SECTION
SCALE 1:5

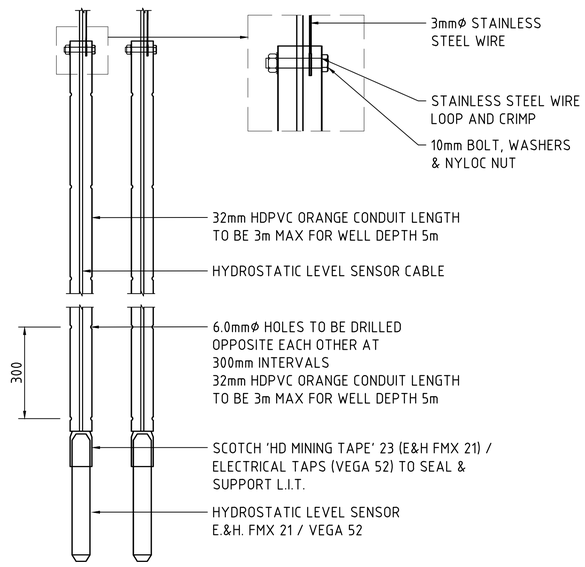

LEVEL SENSOR AND CONDUIT DETAILS
NOT TO SCALE

0 20 40 60 80 100mm
SCALE 1:2 AT ORIGINAL SIZE

0 50 100 150 200 250mm
SCALE 1:5 AT ORIGINAL SIZE

TENDER ISSUE
NOT FOR CONSTRUCTION

No.	REVISION DETAILS		
1	REISSUED FOR TENDER	RK	16.04.21
0	ISSUED FOR TENDER	CW	07.09.17

CONSULTANT DETAILS:
GHD
57 Graham Street Nowra NSW 2541
T 61 2 4424 4900 F 61 2 4424 4999
E noamail@ghd.com W www.ghd.com

CONSULTANT REFERENCE No. 24356-231

Shoalhaven Water
A Group of Shoalhaven City Council

DESIGNED: CW	DATE: 26.03.15	COMPANY: GHD	
DRAWN: JC	DATE: 26.03.15	COMPANY: GHD	
CHECKED: SR	DATE: 20.05.15	COMPANY: GHD	
APPROVED: CS	DATE: 07.09.17	COMPANY: GHD	

TITLE:
SHOALHAVEN WATER
LYREBIRD PARK NOWRA SPS2 UPGRADE

PIPE BRACKET AND LEVEL SENSOR DETAILS

SIZE:	SCALE:	INDEX No.	DRAWING No.	SHEET	REV No.
A1	AS SHOWN		24356	231	1

Plot Date: 15/04/21 - 21:30 Cad File: N:\AU\Wollongong\Projects\23\12540351\CADD\Drawings\Lyrebird\24356-231.dwg

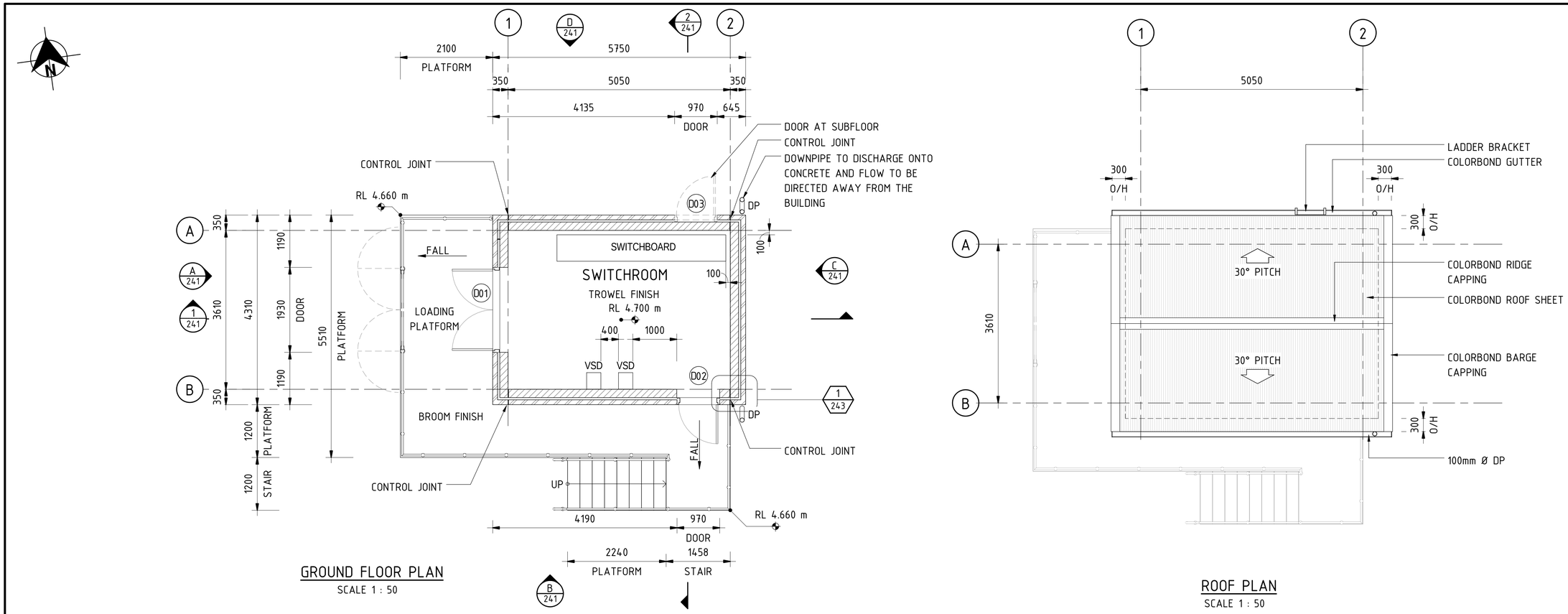

GROUND FLOOR PLAN
SCALE 1 : 50

ROOF PLAN
SCALE 1 : 50

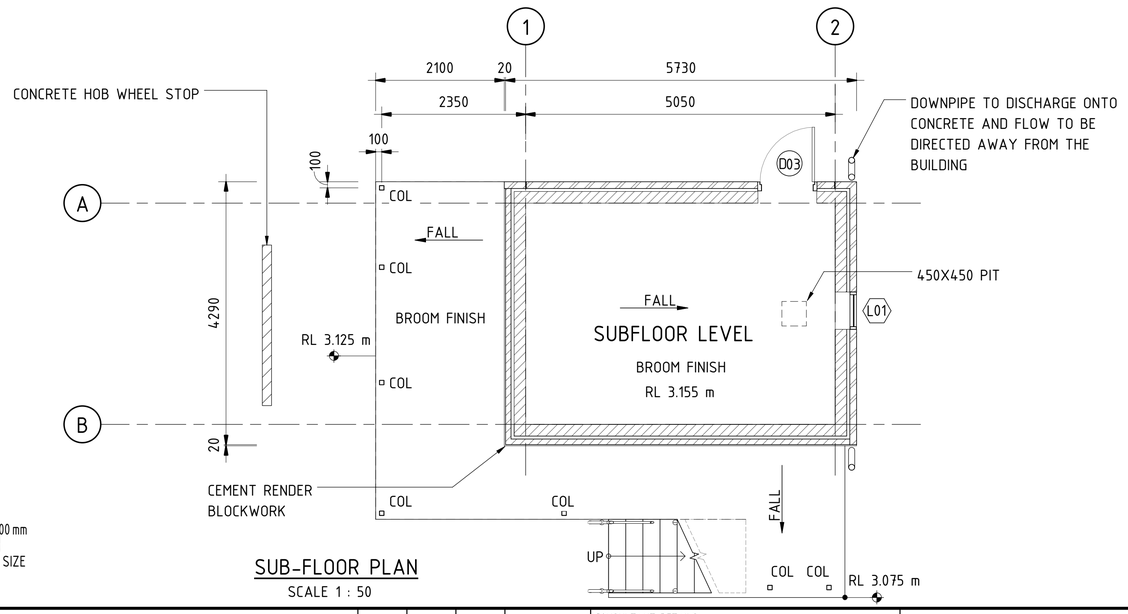

SUB-FLOOR PLAN
SCALE 1 : 50

No.	REVISION DETAILS	DWN	CKD	APP	DATE
2	REISSUED FOR TENDER	RK	MH	CS	16/04/2021
1	LEVELS UPDATED	NP	TA	CS	29/06/2017
0	FOR CONSTRUCTION	AA	TA	CS	06/07/2016

CONSULTANT DETAILS:
GHD
57 Graham Street Nowra NSW 2541 Australia
T 61 2 4424 4900 F 61 2 4424 4999
E noamail@ghd.com W www.ghd.com

Conditions of Use.
This document may only be used by GHD's client (and any other person who GHD has agreed can use this document) for the purpose for which it was prepared and must not be used by any other person or for any other purpose.

CONSULTANT REFERENCE No. 23-1426651-03-240

Shoalhaven Water
A Group of Shoalhaven City Council

DESIGNED: S. MELLOR	DATE: 13/05/2016	COMPANY: GHD	TITLE: SHOALHAVEN WATER
DRAWN: A. ARIMADO	DATE: 13/05/2016	COMPANY: GHD	LYREBIRD PARK NOWRA SPS2 UPGRADE
CHECKED: T. ALAS	DATE: 05/07/2016	COMPANY: GHD	SWITCHROOM BUILDING
APPROVED: C. SINGLETON	DATE: 06/07/2016	COMPANY: GHD	FLOOR PLAN AND ROOF PLAN

SIZE	SCALE	INDEX No.	DRAWING No.	SHEET	REV No.
A1	AS SHOWN		24356	240	2

Plot Date: 29/06/2017 7:09:21 PM
Cad File No: C:\Users\nbpalalon\Documents\7112381_LYREBIRD PARK SPS SWITCHROOM_nbpalalon.rvt

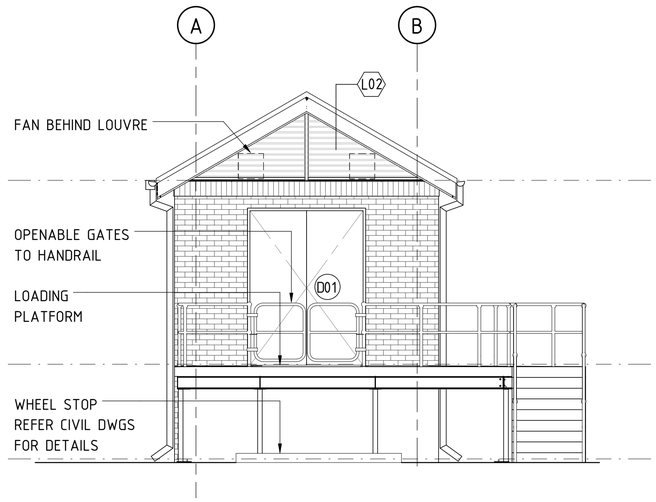

A 240 ELEVATION
SCALE 1 : 50

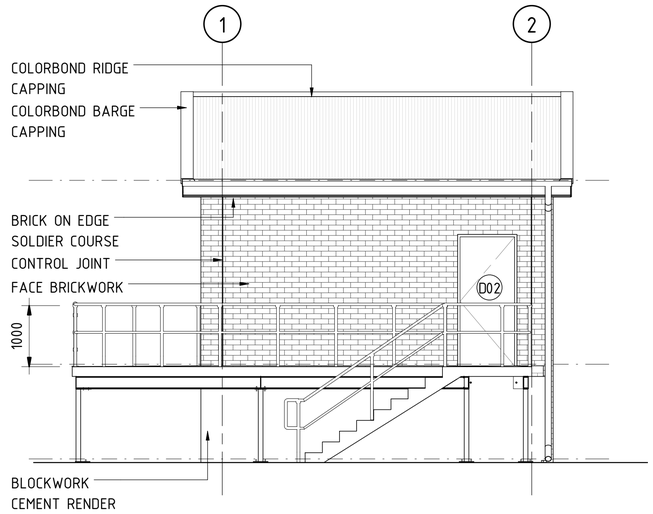

B 240 ELEVATION
SCALE 1 : 50

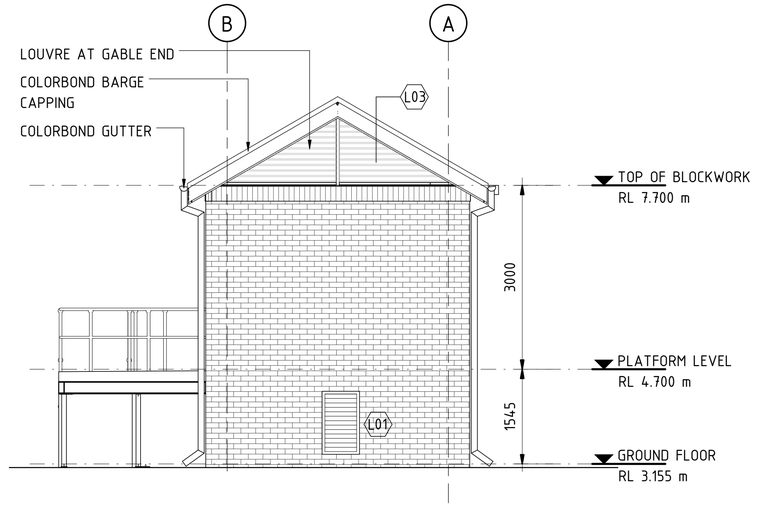

C 240 ELEVATION
SCALE 1 : 50

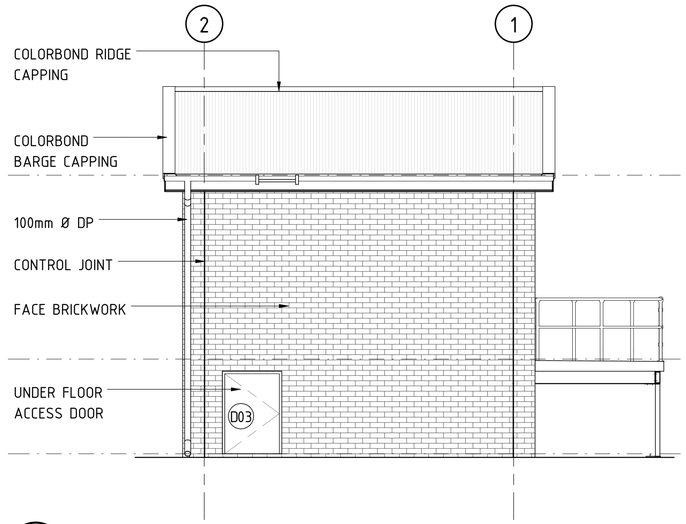

D 240 ELEVATION
SCALE 1 : 50

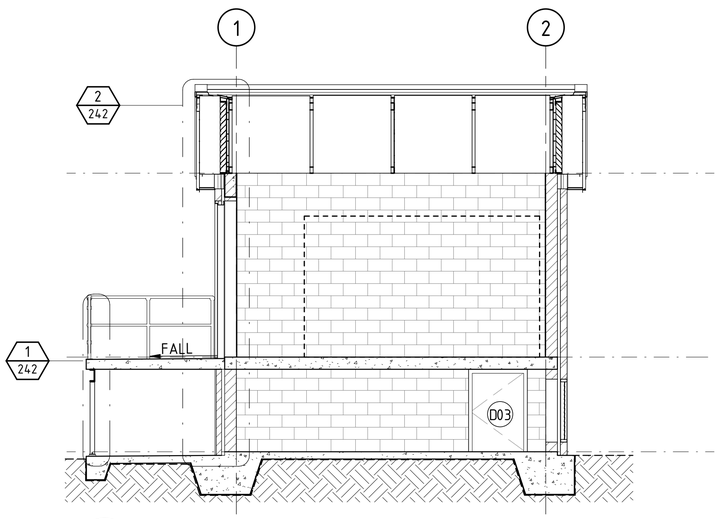

1 240 SECTION
SCALE 1 : 50

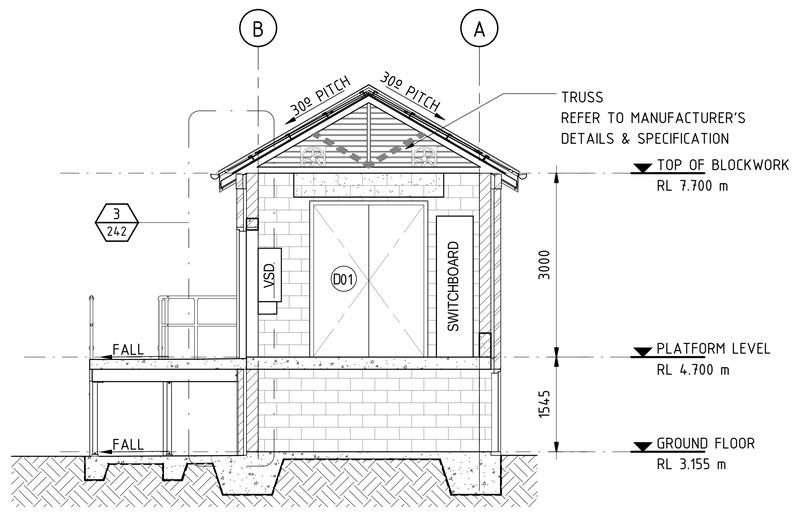

2 240 SECTION
SCALE 1 : 50

0 500 1000 1500 2000 2500 mm
SCALE 1:50 AT ORIGINAL SIZE

No.	REVISION DETAILS	DWN	CKD	APP	DATE
2	REISSUED FOR TENDER	RK	MH	CS	16/04/2021
1	LEVELS UPDATED	NP	TA	CS	29/06/2017
0	FOR CONSTRUCTION	AA	TA	CS	06/07/2016

CONSULTANT DETAILS:
GHD
57 Graham Street Nowra NSW 2541 Australia
T 61 2 4424 4900 F 61 2 4424 4999
E noamail@ghd.com W www.ghd.com

Conditions of Use.
This document may only be used by GHD's client (and any other person who GHD has agreed can use this document) for the purpose for which it was prepared and must not be used by any other person or for any other purpose.

CONSULTANT REFERENCE No.
23-1426651-03-241

Shoalhaven Water
A Group of Shoalhaven City Council

DESIGNED: S. MELLOR	DATE: 13/05/2016	COMPANY: GHD	
DRAWN: A. ARIMADO	DATE: 13/05/2016	COMPANY: GHD	
CHECKED: T. ALAS	DATE: 05/07/2016	COMPANY: GHD	
APPROVED: C. SINGLETON	DATE: 06/07/2016	COMPANY: GHD	

TITLE:
SHOALHAVEN WATER
LYREBIRD PARK NOWRA SPS2 UPGRADE
SWITCHROOM BUILDING
ELEVATIONS AND SECTIONS

SIZE	SCALE	INDEX No.	DRAWING No.	SHEET	REV No.
A1	AS SHOWN		24356	241	2

Plot Date: 29/06/2017 7:09:23 PM
Cad File No: C:\Users\nbpalalon\Documents\7112381_LYREBIRD PARK SPS SWITCHROOM_nbpalalon.rvt

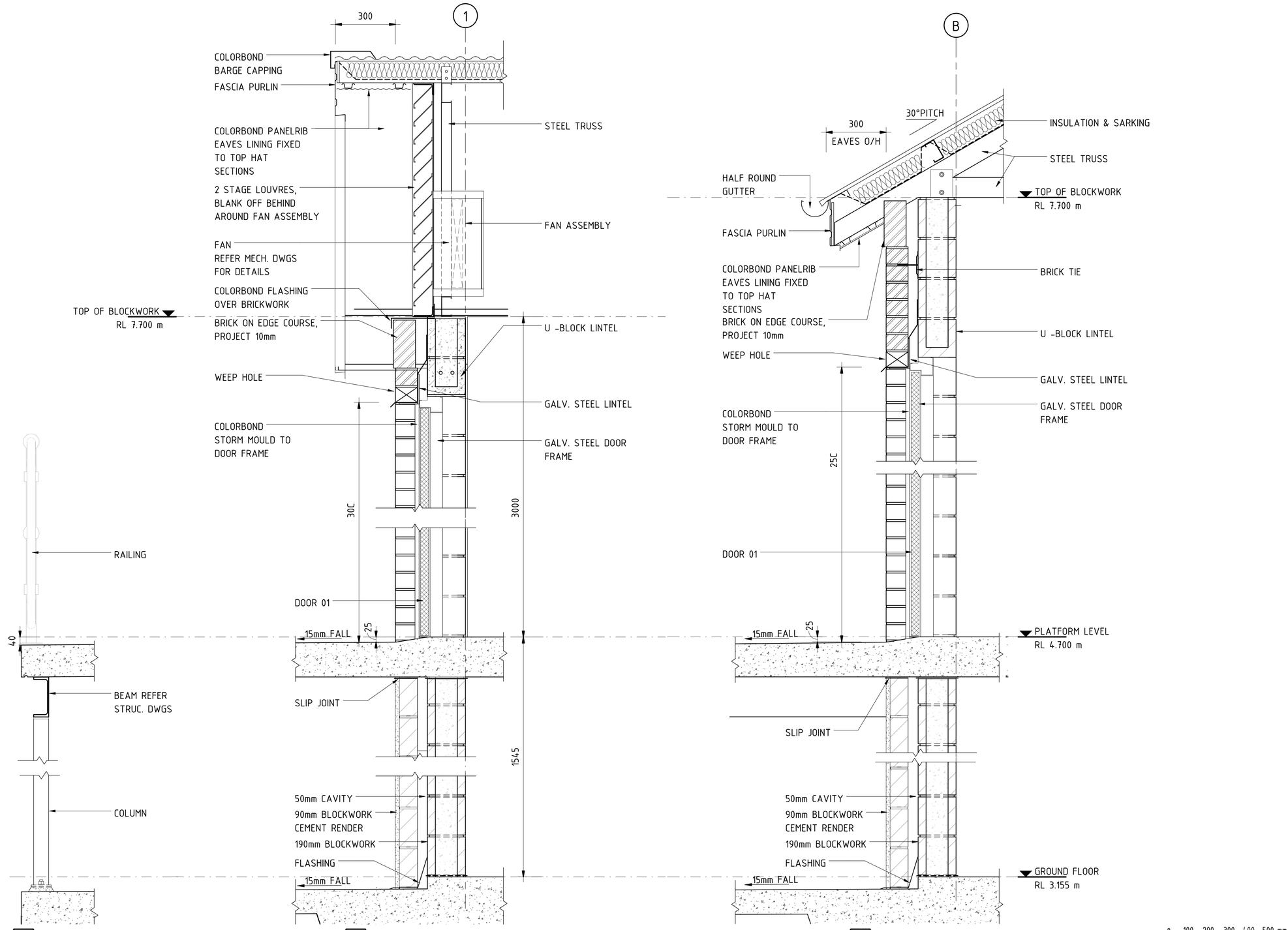

No.	REVISION DETAILS	DWN	CKD	APP	DATE
2	REISSUED FOR TENDER	RK	MH	CS	16/04/2021
1	LEVELS UPDATED	NP	TA	CS	29/06/2017
0	FOR CONSTRUCTION	AA	TA	CS	06/07/2016

CONSULTANT DETAILS:
GHD
57 Graham Street Nowra NSW 2541 Australia
T 61 2 4424 4900 F 61 2 4424 4999
E noamail@ghd.com W www.ghd.com

Conditions of Use.
This document may only be used by GHD's client (and any other person who GHD has agreed can use this document) for the purpose for which it was prepared and must not be used by any other person or for any other purpose.

CONSULTANT REFERENCE No. 23-1426651-03-242

Shoalhaven Water
A Group of Shoalhaven City Council

DESIGNED: S. MELLOR	DATE: 13/05/2016	COMPANY: GHD	
DRAWN: L. ROQUE	DATE: 13/05/2016	COMPANY: GHD	
CHECKED: T. ALAS	DATE: 05/07/2016	COMPANY: GHD	
APPROVED: C. SINGLETON	DATE: 06/07/2016	COMPANY: GHD	

TITLE:
SHOALHAVEN WATER
LYREBIRD PARK NOWRA SPS2 UPGRADE
SWITCHROOM BUILDING
WALL SECTION DETAILS

SIZE	SCALE	INDEX No.	DRAWING No.	SHEET	REV No.
A1	AS SHOWN		24356	242	2

Plot Date: 29/06/2017 7:09:24 PM Cad File No: C:\Users\nbpalalon\Documents\7112381_LYREBIRD PARK SPS SWITCHROOM_nbpalalon.rvt

DOOR AND LOUVRE SCHEDULE

DIMENSION	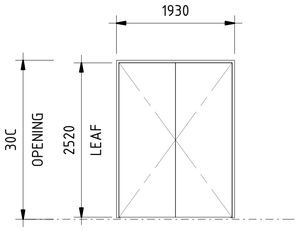	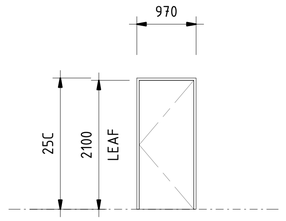	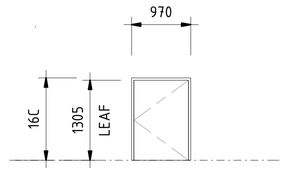	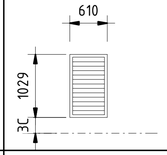	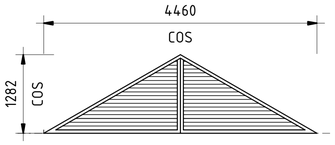
MARK	D01	D02	D03	L01	L02 & L03
TYPE	EXTERNAL DOUBLE LEAF PERSONNEL DOOR	EXTERNAL SINGLE LEAF PERSONNEL DOOR	EXTERNAL SINGLE LEAF UNDERFLOOR ACCESS DOOR	LOUVRE	LOUVRE
FRAME	STEEL FRAME TO BE CONTINUOUSLY WELDED FROM METALLIC COATED STEEL SHEET SECTION, INCLUDING NECESSARY ACCESSORIES SUCH AS BUFFERS, STRIKE PLATES, SPREADERS, FIXING TIES OR BRACKETS, AND SUITABLE PROVISION FOR FIXING HARDWARE, AND PRE-FINISHED WITH PROTECTIVE COATING. FRAME FINISH BEFORE PAINT: GRIND WELDS SMOOTH, COLD GALVANIZE JOINTS AND SHOP PRIME FULL FRAME. BASE METAL THICKNESS: GREATER OR EQUAL TO 1.4mm. METALLIC COATED STEEL SHEET: TO AS1397. PAINT FINISH AS NOTED IN FINISHES SCHEDULE.	STEEL FRAME TO BE CONTINUOUSLY WELDED FROM METALLIC COATED STEEL SHEET SECTION, INCLUDING NECESSARY ACCESSORIES SUCH AS BUFFERS, STRIKE PLATES, SPREADERS, FIXING TIES OR BRACKETS, AND SUITABLE PROVISION FOR FIXING HARDWARE, AND PRE-FINISHED WITH PROTECTIVE COATING. FRAME FINISH BEFORE PAINT: GRIND WELDS SMOOTH, COLD GALVANIZE JOINTS AND SHOP PRIME FULL FRAME. BASE METAL THICKNESS: GREATER OR EQUAL TO 1.4mm. METALLIC COATED STEEL SHEET: TO AS1397. PAINT FINISH AS NOTED IN FINISHES SCHEDULE.	STEEL FRAME TO BE CONTINUOUSLY WELDED FROM METALLIC COATED STEEL SHEET SECTION, INCLUDING NECESSARY ACCESSORIES SUCH AS BUFFERS, STRIKE PLATES, SPREADERS, FIXING TIES OR BRACKETS, AND SUITABLE PROVISION FOR FIXING HARDWARE, AND PRE-FINISHED WITH PROTECTIVE COATING. FRAME FINISH BEFORE PAINT: GRIND WELDS SMOOTH, COLD GALVANIZE JOINTS AND SHOP PRIME FULL FRAME. BASE METAL THICKNESS: GREATER OR EQUAL TO 1.4mm. METALLIC COATED STEEL SHEET: TO AS1397. PAINT FINISH AS NOTED IN FINISHES SCHEDULE.	STEEL FRAMED STORM PROOF TWO STAGE LOUVRES WITH POWDER COATED ALUMINIUM BLADES, ALL AS SPECIFIED. FIT WITH 25mm GALVANISED BIRD MESH TO REAR FACE AND G4 PLEATED FILTER.	STEEL FRAMED STORM PROOF TWO STAGE LOUVRES WITH POWDER COATED ALUMINIUM BLADES, ALL AS SPECIFIED. FIT WITH 25mm GALVANISED BIRD MESH TO REAR FACE AND G4 PLEATED FILTER.
DESCRIPTION	METAL LINED SOLID CORE, 40mm WITH WP PLY FACING AND COLORBOND STEEL CLADDING TO ALL FACES, INCL. STILES, TOP AND BOTTOM. EXIT MUST BE READILY OPENABLE WITHOUT A KEY FROM THE INSIDE (DIRECTION OF EGRESS OUT), LEVEL ACTION BY SINGLE HAND DOWNWARD ACTION OR PUSHING ON A SINGLE DEVICE, HEIGHT OF HANDLE LOCATED BETWEEN 900 TO 1200mm FROM FLOOR LEVEL. THE DOOR IS ABLE TO BE OPENED MANUALLY UNDER A FORCE OF NOT MORE THAN 110N.	METAL LINED SOLID CORE, 40mm WITH WP PLY FACING AND COLORBOND STEEL CLADDING TO ALL FACES, INCL. STILES, TOP AND BOTTOM. EXIT MUST BE READILY OPENABLE WITHOUT A KEY FROM THE INSIDE (DIRECTION OF EGRESS OUT), LEVEL ACTION BY SINGLE HAND DOWNWARD ACTION OR PUSHING ON A SINGLE DEVICE, HEIGHT OF HANDLE LOCATED BETWEEN 900 TO 1200mm FROM FLOOR LEVEL. THE DOOR IS ABLE TO BE OPENED MANUALLY UNDER A FORCE OF NOT MORE THAN 110N.	METAL LINED SOLID CORE, 40mm WITH WP PLY FACING AND COLORBOND STEEL CLADDING TO ALL FACES, INCL. STILES, TOP AND BOTTOM. EXIT MUST BE READILY OPENABLE WITHOUT A KEY FROM THE INSIDE (DIRECTION OF EGRESS OUT), LEVEL ACTION BY SINGLE HAND DOWNWARD ACTION OR PUSHING ON A SINGLE DEVICE, HEIGHT OF HANDLE LOCATED BETWEEN 900 TO 1200mm FROM FLOOR LEVEL. THE DOOR IS ABLE TO BE OPENED MANUALLY UNDER A FORCE OF NOT MORE THAN 110N.	N/A	N/A
LOCKS, LATCHES, KEYING	REFER SPECIFICATION.	REFER SPECIFICATION.	REFER SPECIFICATION.	N/A	N/A
FURNITURE	STAINLESS STEEL, SATIN FINISH, D LEVER HANDLES ON PLATE, COMPLIANT WITH AS1428.1_2009, INTEGRATED KEY CYLINDER. DELAYED ACTION HEAVY DUTY DOOR CLOSER WITH BACK CHECK OPERATION EQ. TO KABA 9026 SERIES.	STAINLESS STEEL, SATIN FINISH, D LEVER HANDLES ON PLATE, COMPLIANT WITH AS1428.1_2009, INTEGRATED KEY CYLINDER. DELAYED ACTION HEAVY DUTY DOOR CLOSER WITH BACK CHECK OPERATION EQ. TO KABA 9026 SERIES.	STAINLESS STEEL, SATIN FINISH, D LEVER HANDLES ON PLATE, COMPLIANT WITH AS1428.1_2009, INTEGRATED KEY CYLINDER. DELAYED ACTION HEAVY DUTY DOOR CLOSER WITH BACK CHECK OPERATION EQ. TO KABA 9026 SERIES.	N/A	N/A
HINGES	3 OFF SS HEAVY DUTY BUTT HINGES 304 GRADE, 100x75.	3 OFF SS HEAVY DUTY BUTT HINGES 304 GRADE, 100x75.	3 OFF SS HEAVY DUTY BUTT HINGES 304 GRADE, 100x75.	N/A	N/A
SEAL	RAVEN PRODUCTS P/L ACOUSTIC DOOR SEALS -RP47 SI FRAME SEALS (JAMB & HEAD) RP99 SI BOTTOM SEAL FIXED TO INSIDE FACE OF DOORS TO FIT TIGHT TO FLOOR -ADD RP16 SI TO ACTIVE LEAF OF PAIR (EXTERNAL)	RAVEN PRODUCTS P/L ACOUSTIC DOOR SEALS -RP47 SI FRAME SEALS (JAMB & HEAD) RP99 SI BOTTOM SEAL FIXED TO INSIDE FACE OF DOORS TO FIT TIGHT TO FLOOR.	RAVEN PRODUCTS P/L ACOUSTIC DOOR SEALS -RP47 SI FRAME SEALS (JAMB & HEAD) RP99 SI BOTTOM SEAL FIXED TO INSIDE FACE OF DOORS TO FIT TIGHT TO FLOOR.	N/A	N/A
WEATHERPROOFING	INSTALL FLASHING, WEATHER BARS, DRIPS, STORM MOULDS, CAULKING AND POINTING TO PREVENT WATER FROM PENETRATING THE BUILDING STRUCTURE UNDER THE PREVAILING SERVICE CONDITIONS, INCLUDING NORMAL STRUCTURAL MOVEMENT OF THE BUILDING.	INSTALL FLASHING, WEATHER BARS, DRIPS, STORM MOULDS, CAULKING AND POINTING TO PREVENT WATER FROM PENETRATING THE BUILDING STRUCTURE UNDER THE PREVAILING SERVICE CONDITIONS, INCLUDING NORMAL STRUCTURAL MOVEMENT OF THE BUILDING.	INSTALL FLASHING, WEATHER BARS, DRIPS, STORM MOULDS, CAULKING AND POINTING TO PREVENT WATER FROM PENETRATING THE BUILDING STRUCTURE UNDER THE PREVAILING SERVICE CONDITIONS, INCLUDING NORMAL STRUCTURAL MOVEMENT OF THE BUILDING.	N/A	N/A

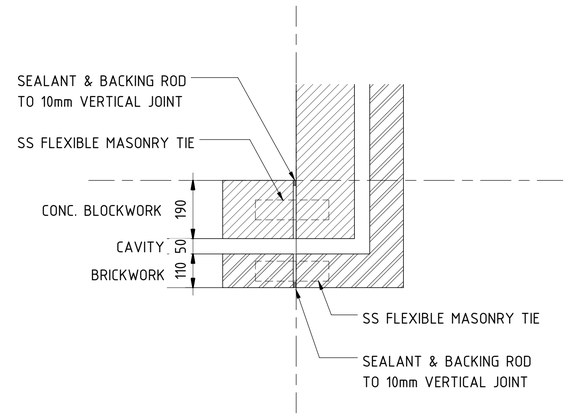

CONTROL JOINT DETAIL
SCALE 1 : 10

0 100 200 300 400 500 mm
SCALE 1:10 AT ORIGINAL SIZE

0 500 1000 1500 2000 2500 mm
SCALE 1:50 AT ORIGINAL SIZE

No.	REVISION DETAILS	DWN	CKD	APP	DATE
1	REISSUED FOR TENDER	RK	MH	CS	16/04/2021
0	FOR CONSTRUCTION	AA	TA	CS	06/07/2016

CONSULTANT DETAILS:
GHD
Conditions of Use.
This document may only be used by GHD's client (and any other person who GHD has agreed can use this document) for the purpose for which it was prepared and must not be used by any other person or for any other purpose.
57 Graham Street Nowra NSW 2541 Australia
T 61 2 4424 4900 F 61 2 4424 4999
E noamail@ghd.com W www.ghd.com

CONSULTANT REFERENCE No.
23-1426651-03-243

Shoalhaven Water
A Group of Shoalhaven City Council

DESIGNED: S. MELLOR	DATE: 13/05/2016	COMPANY: GHD	TITLE: SHOALHAVEN WATER LYREBIRD PARK NOWRA SPS2 UPGRADE SWITCHROOM BUILDING OPENING SCHEDULE
DRAWN: A. ARIMADO	DATE: 13/05/2016	COMPANY: GHD	
CHECKED: T. ALAS	DATE: 05/07/2016	COMPANY: GHD	
APPROVED: C. SINGLETON	DATE: 06/07/2016	COMPANY: GHD	

SIZE	SCALE	INDEX No.	DRAWING No.	SHEET	REV No.
A1	AS SHOWN		24356	243	1

Plot Date: 29/06/2017 7:09:24 PM
Cad File No: C:\Users\nbpalaon\Documents\7112381_LYREBIRD PARK SPS SWITCHROOM_nbpalaon.rvt

GENERAL

G1. READ THESE NOTES IN CONJUNCTION WITH OTHER ENGINEERING DRAWINGS AND PROJECT SPECIFICATIONS, AND WITH SUCH OTHER WRITTEN INSTRUCTIONS ISSUED. IN CASE OF DISCREPANCY, PRECEDENCE IS GIVEN TO DRAWINGS, THEN NOTES, THEN SPECIFICATION.

G2. CARRY OUT WORK IN A SAFE MANNER IN ACCORDANCE WITH APPLICABLE LEGISLATION, STATUTORY REGULATIONS, BY-LAWS OR RULES. CONTRACTOR IS RESPONSIBLE FOR OCCUPATIONAL HEALTH AND SAFETY OF SITE PERSONNEL AND GENERAL PUBLIC IN ACCORDANCE WITH WORK HEALTH AND SAFETY ACT 2011, LEGISLATIVE REQUIREMENTS, ASSOCIATED REGULATIONS AND CODES OF PRACTICE, INDUSTRIAL AGREEMENTS AND ACCEPTED INDUSTRY PRACTICE.

G3. REFER DISCREPANCIES TO SUPERINTENDENT BEFORE PROCEEDING WITH WORK.

DESIGN ASSUMPTIONS

G4. ALL STRUCTURES TO HAVE A DESIGN WORKING LIFE OF 50 YEARS UNO. EXCEPTION INCLUDES JOINT SEALANTS, STRUCTURAL STEELWORK ETC. WHERE PERIODIC MAINTENANCE WILL BE REQUIRED.

G5. STRUCTURAL WORK HAS BEEN DESIGNED FOR FOLLOWING LOADS:

- LOADS AS DEFINED IN DRAWINGS.
- BUILDING IMPORTANCE LEVEL : 2
- WIND LOADS TO AS/NZS1170.0:2002: AS/NZS 1170.2:2011 AND BCA
  - ~ REGION : A2
  - ~ AVERAGE RECURRENCE INTERVAL : 500 years
  - ~ ULTIMATE REGIONAL WIND SPEED V_R (3 sec GUST): 46 m/s
  - ~ SERVICEABILITY REGIONAL WIND SPEED V_{25} (3 sec) 37 m/s
  - ~ DIRECTIONAL MULTIPLIER : 1.0
  - ~ TERRAIN CATEGORY : 2.0
  - ~ SHIELDING MULTIPLIER (M_s) : 1.0
  - ~ TOPOGRAPHIC MULTIPLIER (M_t) : 1.0
- LIVE LOADS TO AS AS1170.1:2002, AND AS FOLLOWS:
  - ~ ROOFS: GREATER OF 0.25 kPa OR (1.8/A) + 0.12 kPa.
  - ~ BUILDING FLOOR 5.0 kPa.

FOUNDATIONS AND FOOTINGS

F1. SITE IS CLASSIFIED AS CLASS H-D TO AS2870.

F2. REFER TO GEOTECHNICAL INVESTIGATION REPORT No. 7868201 PREPARED BY DOUGLAS PARTNERS DATED JUNE 2015. NOTIFY SUPERINTENDENT IF CONDITIONS ENCOUNTERED DIFFER FROM THOSE DESCRIBED IN THE REPORT AND SEEK DIRECTIONS.

F3. REMOVE TOP SOIL CONTAINING GRASS ROOTS OR OTHER ORGANIC MATTER, RUBBLE AND / OR DEBRIS AND OTHER UNSUITABLE MATERIAL BELOW FOUNDATIONS.

F4. BACKFILL OVER EXCAVATION WITH GRADE N15 BLINDING CONCRETE.

F5. ENSURE EXCAVATIONS ARE STABLE AND PROTECT SURROUNDING PROPERTY AND SERVICES FROM ADVERSE EFFECTS OF GROUND WORKS. PROVIDE TEMPORARY WORKS AS REQUIRED. PROVIDE SHORING CERTIFIED BY SUITABLY QUALIFIED STRUCTURAL ENGINEER TO ALL DEEP EXCAVATIONS WHERE REQUIRED.

F6. USE SUITABLE CONSTRUCTION TECHNIQUES AND EQUIPMENT FOR BACKFILLING ADJACENT TO STRUCTURES TO PREVENT OVERSTRESS AND DAMAGE. BACKFILL EVENLY TO AVOID DIFFERENTIAL SOIL PRESSURES ON STRUCTURES. BACKFILL AGAINST STRUCTURES ONLY AFTER SPECIFIED CONCRETE STRENGTH IS ACHIEVED, AND PERMANENT SUPPORT INSTALLED WHERE APPLICABLE.

F7. KEEP EXCAVATIONS FREE OF WATER. PROVIDE ADEQUATE DRAINAGE TO ENSURE FORMATION IS NOT AFFECTED BY MOISTURE. PREVENT FOUNDATION DRYING OUT DUE TO EXPOSURE. PLACE BLINDING, FOOTINGS, PILES AND BACKFILL AS SOON AS PRACTICABLE AFTER EXCAVATION.

F8. PROVIDE SAFETY MESH AND OTHER PROTECTION TO PREVENT EXPOSURE OF PERSONNEL TO EXCAVATION DURING FOUNDATION CONSTRUCTION.

F9. SERVICES PASS THROUGH MIDDLE THIRD OF FOOTING, SLEEVE SERVICES OR PROVIDE 40mm THICK CLOSED-CELL POLYETHELENE LAGGING.

F10. WHERE SERVICES PASS UNDER FOOTINGS BACKFILL TRENCHES WITH BLINDING CONCRETE FOR 150mm EACH SIDE OF FOOTING AGAINST CLEAN, DRY, UNDISTURBED NATURAL MATERIAL. PROVIDE FLEXIBLE JOINTS IN STORMWATER AND WASTEWATER SERVICES AT EXTERIOR OF BUILDING.

F11. ENSURE EXCAVATION ARE STABLE AND PROTECT SURROUNDING PROPERTY AND SERVICES FROM ADVERSE EFFECTS OF GROUND WORKS. PROVIDE TEMPORARY WORKS AS REQUIRED. PROVIDE SHORING CERTIFIED BY SIOTABLY QUALIFIED STRUCTURAL ENGINEER TO ALL DEEP EXCAVATIONS WHERE REQUIRED.

F12. DO NOT EXCAVATE WITHIN 45 DEGREE INFLUENCE LINE UNDER ADJACENT FOOTINGS.

F13. ALL FOOTINGS TO BE FOUNDED 200 MIN. INTO A SOIL WITH A MINIMUM ALLWABLE BEARING CAPACITY OF 100kPa.

F14. TOP OF CONCRETE SLAB TO BE LOCATED ABOVE ADJACENT GROUND LEVELS AS SHOWN ON ARCHITECTURAL DRAWINGS. GROUND SURROUNDING BUILDING TO BE SLOPED SO THAT WATER WILL DRAIN AWAY FROM BUILDING TO SUITABLE DISCHARGE POINTS. WHERE ACHIEVED BY FILLING, FILL TO BE LESS PERMEABLE THAN UNDERLYING MATERIAL.

STEEL

S1. ALL STEELWORK IS TO BE HOT DIPPED GALVANISED TO AS/NZS4680 AND AS1214 FOR FASTENERS. THICKNESS OF GALVANISED COATINGS TO AS/NZS4680. ZINC OF GALVANISING BATH TO BE NOT LESS THAN 98% PURE. BATH TEMEPRATURE, TIME OF IMMERSION AND WITHDRAWAL SPEED TO BE AS REQUIRED TO ACHIEVE SPECIFIED COATING THICKNESS AND FINISH. ZINC COATING TO BE CONTINUOUS, ADHERENT, FREE FROM LUMPS, SPIKES, DAGS, RUNS, BLSTERS, ROUGHNESS, GRITTY AREAS, UNCOATED SPOTS, ACID AND BLOCK SPOTS, DROSS, FLUX AND OTHER IMPERFECTIONS.

S2. PROVIDE STEEL IN ACCORDANCE WITH:

- AS1163 GRADE C350 FOR RECTANGULAR AND SQUARE HOLLOW SECTIONS,
- AS/NZS3678 FOR PLATES AND FLOOR PLATE,
- AS/NZS3679 PART 2, GRADE 300 FOR WELDED BEAMS AND WELDED COLUMNS,
- AS/NZS3679 PART 1 GRADE 300 OR BHP GRADE 300 PLUS FOR UNIVERSAL BEAMS, UNIVERSAL COLUMNS, PARALLEL FLANGE CHANNELS, AND ANGLES,
- AS1397 GRADE G450 FOR PURLINS AND GIRTS,
- OTHERWISE TO COMPLY WITH AS/NZS3678 OR AS/NZS3679 GRADE 250 UNO.

S3. STAIR, WALKWAY, PLATFORMS AND HANDRAILS SHALL COMPLY WITH AS1657.

S4. THE CONTRACTOR SHALL SUBMIT SHOP DRAWINGS TO THE SUPERINTENDENT FOR APPROVAL PRIOR TO FABRICATION.

WELDING

S5. WELDING TO BE UNDERTAKEN BY SUITABLY QUALIFIED EXPERIENCED WELDER UNDER SUPERVISION OF QUALIFIED WELDING SUPERVISOR.

S6. CARRY OUT WELDING TO AS/NZS1554: ALL INTERFACES BETWEEN STEEL SECTIONS TO BE CONNECTED WITH 6 mm CONTINUOUS FILLET WELDS ALL ROUND, BOTH SIDES UNO.

- WELDS TO BE SHOP WELDED UNO.
- WELDS TO BE CATEGORY SP.
- ELECTRODES TO BE LOW CARBON WITH TENSILE STRENGTH OF fuw=490 MPa, PRE-APPROVED TO AS/NZS1554, eg CLASSIFICATION B-E48XX.

REINFORCEMENT

R1. SYMBOLS ON DRAWINGS FOR GRADE AND TYPE OF REINFORCEMENT ARE AS FOLLOWS:

- N: HOT ROLLED GRADE 500 DEFORMED (RIBBED) BAR DUCTILITY CLASS N TO AS/NZS4671
- SL: HARD DRAWN WIRE GRADE 500 SQUARE MESH DUCTILITY CLASS L TO AS/NZS4671

R2. PROVIDE ACRS (AUSTRALIAN CERTIFICATION AUTHORITY FOR REINFORCING STEEL LTD) CERTIFICATION OF COMPLIANCE WITH AS/NZS4671 FOR ALL REINFORCEMENT.

R3. REINFORCEMENT TO BE CLEAN, FREE OF LOOSE MILL SCALE, RUST, OIL, GREASE, MUD OR OTHER MATERIAL THAT MIGHT REDUCE BOND BETWEEN REINFORCEMENT AND CONCRETE.

R4. PROVIDE ONE CONTINUOUS BAR PARALLEL TO (WITHIN 75 mm OF) CONCRETE EDGES UNO.

R5. REINFORCEMENT IS REPRESENTED DIAGRAMMATICALLY AND IS NOT NECESSARILY IN TRUE PROJECTION. SET REINFORCEMENT OUT AT EQUAL CENTRES IF SPACING IS NOT NOMINATED.

R6. DO NOT PLACE OR MOVE REINFORCEMENT DURING OR AFTER CONCRETE PLACEMENT.

R7. LAPPED SPLICE LENGTHS FOR VERTICAL BARS (AND HORIZONTAL BARS WITH LESS THAN 300 mm CONCRETE CAST BELOW THE BAR) SPACED AT ≥ 150 mm CENTRES TO COMPLY WITH THE FOLLOWING UNO:

COVER	f'c	N12	N16	N20	N24	N28	N32
≥ 25	≥ 20	590	890	1210	–	–	–
≥ 30	≥25	490	750	1040	1340	–	–
≥ 40	≥32	390	600	840	1110	1400	1710
≥ 50	≥40	350	480	690	920	1180	1450

DO NOT INTERPOLATE INTERMEDIATE VALUES OF SPLICE LENGTHS.
EPOXY COATED BARS, BARS IN LIGHTWEIGHT CONCRETE AND SLIP FORMED CONCRETE WILL REQUIRE LONGER SPLICE LENGTHS. REFER TO AS3600 OR SUPERINTENDENT.

R8. PROVIDE MINIMUM MESH LAPS TO CROSS WIRES OF REINFORCING MESH, SO THAT TWO OUTERMOST WIRES OF ONE SHEET OVERLAP TWO OUTERMOST WIRES OF ADJACENT SHEET BY AT LEAST 25 mm. FOR MESH TYPE SL81, USE 125 mm LAP LENGTH FOR THE END AND SIDE LAP. USE LAP LENGTHS BASED ON LARGEST WIRE SPACING.

R9. DO NOT BEND OR STRAIN REINFORCEMENT IN A WAY THAT MAY CAUSE DAMAGE. BEND DIAMETERS TO BE TO AS3600. BARS TO BE BENT COLD UNO. GRADE 250 BARS MAY BE BENT AT TEMPERATURES UP TO 850°C. DO NOT COOL HEATED BARS BY QUENCHING.

MASONRY

GENERAL

M1. MASONRY WORK TO BE TO AS3700 AND AS/NZS4455.

M2. CONSTRUCT MASONRY COMPLETE WITH BED JOINT REINFORCEMENT, FLEXIBLE MASONRY ANCHORS, WALL TIES, FIXING STRAPS etc TO AS/NZS2699. USE ONLY R4 GRADE 316 OR 316L STAINLESS STEEL.

M3. ENSURE WALLS WHICH RELY ON FLOORS FOR STABILITY ATTAIN SUFFICIENT STRENGTH BEFORE NEXT LEVEL IS COMMENCED.

M4. USE GRADE 15 CONCRETE BLOCKS ie MINIMUM CHARACTERISTIC UNCONFINED COMPRESSIVE STRENGTH (Cu)= 15 MPa TO AS/NZS4455 UNO AND OF DIMENSIONAL CATEGORY DW4 TO AS/NZS4455. USE BRICKS WITH MINIMUM CHARACTERISTIC COMPRESSIVE STRENGTH OF 20 MPa AND DIMENSIONAL CATEGORY DW1 TO AS/NZS4455 AND AS/NZS4456. DO NOT LAY CLAY BRICKS UNTIL THEY HAVE BEEN OUT OF KILN FOR AT LEAST 14 DAYS. COLOUR AND TEXTURE OF MASONRY UNITS TO BE WITHIN AN AGREED RANGE. MASONRY UNITS TO BE RESISTANT TO SALT ATTACK. MAXIMUM PERMEABILITY OF MASONRY UNITS TO BE 2 mm/minute. EFFLORESCENCE POTENTIAL OF MASONRY UNITS TO BE NIL OR SLIGHT. CHARACTERISTIC LATERAL MODULUS OF RUPTURE OF MASONRY UNITS TO BE 0.8 MPa.

No.	REVISION DETAILS	DWN	CKD	APP	DATE
1	REISSUED FOR TENDER	RK	MH	CS	16/04/2021
0	FOR CONSTRUCTION	MC	PK	CS	06/07/2016

CONSULTANT DETAILS:
GHD
57 Graham Street Nowra NSW 2541 Australia
T 61 2 4424 4900 F 61 2 4424 4999
E noamail@ghd.com W www.ghd.com

Conditions of Use.
This document may only be used by GHD's client (and any other person who GHD has agreed can use this document) for the purpose for which it was prepared and must not be used by any other person or for any other purpose.

CONSULTANT REFERENCE No. 23-14426651-03-244

Shoalhaven Water
A Group of Shoalhaven City Council

DESIGNED: A. FUERTES	DATE: 16/02/2016	COMPANY: GHD	TITLE: SHOALHAVEN WATER
DRAWN: M. CRUZ	DATE: 16/02/2016	COMPANY: GHD	LYREBIRD PARK NOWRA SPS2 UPGRADE
CHECKED: P. KAMPFF	DATE: 05/07/2016	COMPANY: GHD	SWITCHROOM BUILDING
APPROVED: C. SINGLETON	DATE: 06/07/2016	COMPANY: GHD	STRUCTURAL NOTES SHEET 1

SIZE	SCALE	INDEX No.	DRAWING No.	SHEET	REV No.
A1	AS SHOWN		24356	244	1

M5. FOR CONCRETE BLOCKWORK USE CLASS M3 MORTAR MADE WITH 1 PART CEMENT: 5 PARTS SAND AND A METHYL CELLULOSE WATER THICKENER (eg: `DYNEX' AS PRODUCED BY A.V. SYNTEC) TO AS3700. WHERE REQUIRED IN TABLE 5 OF AS3700-2001, USE CLASS M4 MORTAR MADE WITH 1 PART CEMENT, 0 TO 0.25 PARTS LIME AND 3 PARTS SAND, OR 1 PART CEMENT AND 4 PARTS SAND PLUS A METHYL CELLULOSE WATER THICKENER (eg: `DYNEX' AS PRODUCED BY A.V. SYNTEC) TO AS3700. SUBMIT DETAILS OF PROPOSED ADDITIVES FOR SUPERINTENDENT'S APPROVAL. USE WHITE CEMENT TO AS3972 TYPE GP OR GB, WITH IRON SALTS NOT EXCEEDING 1%. USE WELL GRADED CLEAN SAND WITH LOW CLAY CONTENT (MAXIMUM 10% PASSING THE 75 MICRON SIEVE) AND FREE FROM EFFLORESCING SALTS, ORGANIC MATTER AND OTHER IMPURITIES. USE HYDRATED BUILDING LIME TO AS1672.1 COLOUR AND TEXTURE OF FACE OR POINTING MORTAR TO MATCH APPROVED SAMPLE. USE APPROVED REFRACTORY MORTAR FOR REFRACTORY BRICKWORK, AS RECOMMENDED BY MANUFACTURER.

M6. ENSURE THAT PERPENDS AND BEDS ARE COMPLETELY FILLED WITH MORTAR.

M7. MORTAR BED JOINTS AND PERPENDS TO BE FULLY BEDDED, AND 10 mm MAXIMUM AS PER SECTION 4.9 OF AS3700-2001.

M8. CONTROL JOINTS TO BE 20 mm WIDE WITH 25 mm DIAMETER CLOSED CELL POLYETHYLENE FOAM BACKING ROD AND APPROVED POLYSULPHIDE SEALANT AT EXTERNAL FACE UNO. FINISH SEALANT IN LINE WITH MORTAR JOINTS. TOLERANCE ON WIDTH +5, -0 mm. PROVIDE JOINTS IN WALL FINISHES AT CONTROL JOINTS IN MASONRY. PLACE POLYSTYRENE IN VERTICAL JOINTS DURING CONSTRUCTION TO ENSURE THAT MORTAR DROPPINGS AND OTHER HARD MATERIALS DO NOT FALL INTO OR REMAIN IN CONTROL JOINTS. REMOVE POLYSTYRENE AT COMPLETION.

M9. INSTALL CONTROL JOINTS IN MASONRY AT 6 METRES MAXIMUM CENTRES (3 METRES MAXIMUM FROM CORNERS, AND AS SHOWN ON DRAWINGS.

M10. PROVIDE WEEP HOLES IN THE FORM OF OPEN PERPENDS TO EXTERNAL LEAVES OF CAVITY WALLS IN COURSE ABOVE DAMP-PROOF COURSES, FLASHINGS AND CAVITY FILL, AND AT BOTTOMS OF UNFILLED CAVITIES. SPACING 750 mm MAXIMUM CENTRES.

LINTELS

M11. LINTEL DURABILITY REQUIREMENTS TO BE IN ACCORDANCE WITH TABLE 12.2 OF AS3700. PROVIDE ONE LINTEL TO EACH WALL LEAF IN CONFORMANCE WITH THE LINTEL SCHEDULE. KEEP LINTELS 10 mm CLEAR OF HEADS OF FRAMES. PACK MORTAR BETWEEN ANY VERTICAL COMPONENT AND SUPPORTED MASONRY UNITS. FOR ANGLES INSTALL THE LONG LEG VERTICAL. PROVIDE MINIMUM BEARING EACH END AS FOLLOWS:
-SPAN ≤ 1000 mm: 150x90x10 UA WITH 200 mm END BEARING.
-SPAN > 1000 mm ≤ 3000 mm: 150x90x10 UA (LONG LEG VERTICAL) 200 mm END BEARING.
TEMPORARILY PROP LINTELS UNTIL THE MASONRY REACHES REQUIRED STRENGTH TO PREVENT DEFLECTION OR EXCESSIVE ROTATION.

M12. PROP COMPOSITE STEEL AND MASONRY LINTELS UNTIL MORTAR IN COURSES OF MASONRY BEING ENGAGED ABOVE LINTEL HAS CURED IN ACCORDANCE WITH MANUFACTURER'S SPECIFICATIONS.

REINFORCED MASONRY

M13. USE CONCRETE GROUT FOR FILLING CORES WITH:
- MINIMUM f'c = 20 MPa TO AS3600.
- MINIMUM CEMENT CONTENT = 300 kg/m^3.
- MAXIMUM AGGREGATE SIZE = 10 mm.
- SLUMP = 230 ± 30 mm TO AS1012.3.

M14. FOR BOND BEAMS USE CONCRETE WITH f'c = 20 MPa TO AS3600, SLUMP = 80 ±15 mm TO AS1012.3.

M15. REMOVE MORTAR DROPPINGS FROM BOTTOM OF CORES BY USE OF CLEANOUT BLOCKS BEFORE PLACING CONCRETE AND AT HORIZONTAL BREAKS IN CONSTRUCTION. REMOVE MORTAR FINS PROTRUDING FROM JOINTS BEFORE PLACING CONCRETE.

M16. DO NOT PROCEED WITH BLOCKWORK CONSTRUCTION MORE THAN SIX COURSES OR 1500 mm AHEAD OF CONCRETE PLACEMENT.

M17. STOP CONCRETE 50 mm BELOW TOP OF BLOCKS TO PROVIDE KEY FOR FOLLOWING CONCRETE. ENSURE PROPER COMPACTION OF CONCRETE BY "RODDING" OR OTHER APPROVED MEANS.

LIGHT STEEL FRAMING:

L1. ROOF FRAMING INCLUDING ROOF BRACING. BLOCKING AND TIE DOWNS TO RESIST UPLIFT, ETC TO BE DESIGNED TO AS4600 AND NASH STANDARD FOR RESIDENTIAL AND LOWRISE STEEL FRAMING AND CERTIFIED BY AN INDEPENDENT CHARTERED ENGINEER PROVIDE WORKSHOP DRAWINGS AND DESIGN CALCULATIONS. SUBMIT THREE COPIES OF EACH TO PRINCIPAL'S REPRESENTATIVE FOR REVIEW OF GENERAL COMPLIANCE WITH DESIGN CONCEPTS. DO NOT COMMENCE FABRICATION UNTIL SHOP DRAWINGS HAVE BEEN REVIEWED. PRINCIPAL'S REPRESENTATIVE REVIEW DOES NOT INCLUDE CHECKING OF DIMENSIONS, AND DOES NOT RELIEVE CONTRACTOR OF SPONSIBILITY FOR COMPLIANCE WITH DRAWINGS AND SPECIFICATIONS.

L2. DESIGN CALCULATIONS/SHOP DRAWINGS TO SHOW: ARRANGEMENT OF MEMBERS, LOCATION OF MEMBERS IN BUILDING, LOADING PARAMETERS AND BRACING LENGTHS ASSUMED IN DESIGN, SIZE OF EACH MEMBER, TOLERANCES ON MEMBER SIZES, JOINT DETAILS INCLUDING LIFTING POINTS, METHOD OF FIXING AND BRACING, CORROSION PROTECTION, LONG TERM DEFLECTION, METHOD OF FABRICATION, SIZE AND SPECIFICATION OF GUSSETS, GUSSET FASTENINGS, BASE PLATE DETAILS, FIXINGS FOR URLINS, GIRTS AND BRACING, METHOD OF HANDLING ERECTION INCLUDING TEMPORARY BRACING REQUIRED, IF ANY) PRECAMBER, ETC.

L3. ROOF FRAMING SHALL BE DESIGNED FOR THE FOLLOWING LOADS:
- DEAD LOADS ROOF CLADDING, FRAMING AND CEILINGS
- PLANT AND DUCTS AS SHOWN ON MECHANICAL SHOP DRAWINGS.
- ADDITIONAL TRUSS LOADS OF 0.15 kPa AS NOTED ON THIS DRAWING

L4. MAX LONG TERM DEFLECTION OF ROOF FRAMING UNDER PERMANENT LOAD = SPAN/600.

L5. MAX DEFLECTION UNDER OTHER LOADS: SPAN/400 OR 20mm WHICHEVER IS SMALLER.

L6. DESIGN ROOF BRACING IS THE RESPONSIBILITY OF ROOF FRAMING DESIGNER. BRACING SHOWN IN THE DRAWING IS INDICATIVE ONLY.

ADDITIONAL TRUSS LOADS:

0.15 kPa (15kg/m^2) SERVICES LOAD (MECHANICAL AND ELECTRICAL) ACTING ON BOTTOM CHORDS OF TRUSSES.

No.	REVISION DETAILS	DWN	CKD	APP	DATE
1	REISSUED FOR TENDER	RK	MH	CS	16/04/2021
0	FOR CONSTRUCTION	MC	PK	CS	06/07/2016

CONSULTANT DETAILS:
GHD
57 Graham Street Nowra NSW 2541 Australia
T 61 2 4424 4900 F 61 2 4424 4999
E noamail@ghd.com W www.ghd.com
Conditions of Use.
This document may only be used by GHD's client (and any other person who GHD has agreed can use this document) for the purpose for which it was prepared and must not be used by any other person or for any other purpose.

CONSULTANT REFERENCE No. 23-1426651-03-245

Shoalhaven Water
A Group of Shoalhaven City Council

DESIGNED: A. FUERTES	DATE: 16/02/2016	COMPANY: GHD	
DRAWN: M. CRUZ	DATE: 16/02/2016	COMPANY: GHD	
CHECKED: P. KAMPFF	DATE: 05/07/2016	COMPANY: GHD	
APPROVED: C. SINGLETON	DATE: 06/07/2016	COMPANY: GHD	

TITLE:
SHOALHAVEN WATER
LYREBIRD PARK NOWRA SPS2 UPGRADE
SWITCHROOM BUILDING
STRUCTURAL NOTES SHEET 2

SIZE	SCALE	INDEX No.	DRAWING No.	SHEET	REV No.
A1	AS SHOWN		24356	245	1

Plot Date: 29/06/2017 7:09:34 PM Cad File No: C:\Users\nbpalalon\Documents\7112381_LYREBIRD PARK SPS SWITCHROOM_nbpalalon.rvt

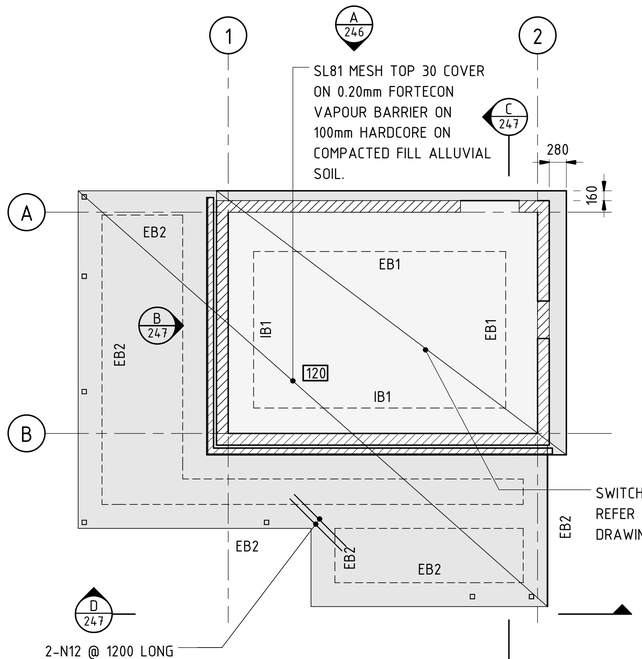

FOUNDATION PLAN

SCALE 1 : 50

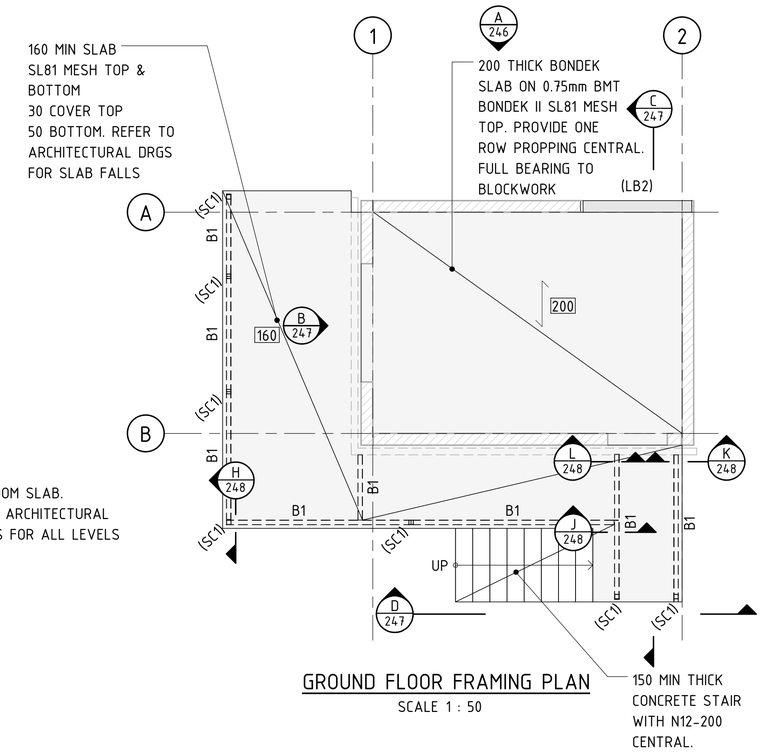

GROUND FLOOR FRAMING PLAN

SCALE 1 : 50

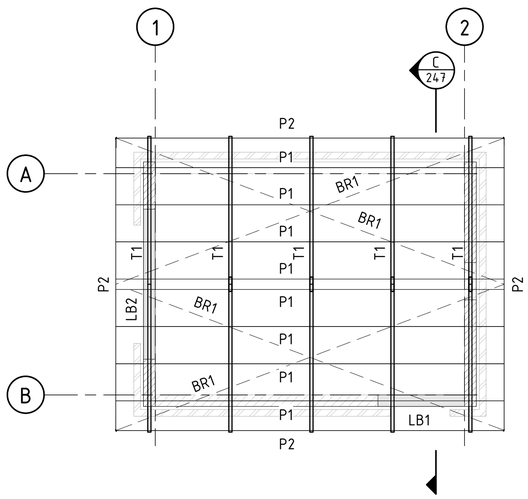

ROOF FRAMING PLAN

SCALE 1 : 50

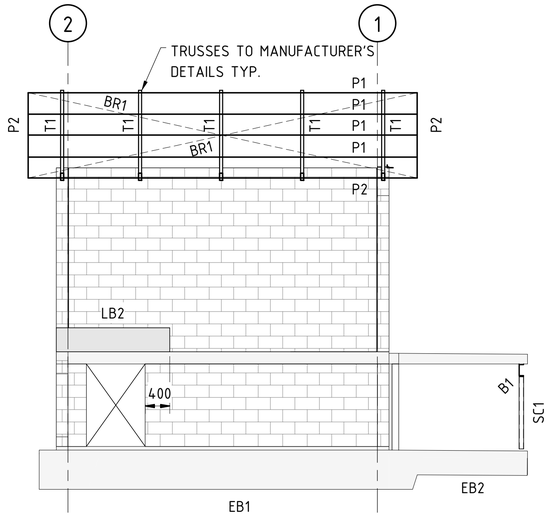

A/246 ELEVATION

SCALE 1 : 50

0 500 1000 1500 2000 2500 mm

SCALE 1:50 AT ORIGINAL SIZE

NOTES:

1. REFER TO ARCHITECTURAL DRAWINGS FOR ALL LEVELS, SETOUT, DIMENSIONS, SLAB SETDOWNS, CONTROL JOINT DETAILS, HOBS AND FALLS.
2. REFER TO DRAWINGS 24356-243 AND 244 FOR STRUCTURAL NOTES.

LEGEND:

- 120 — DENOTES 120 SLAB THICKNESS
- 160 — DENOTES 160 SLAB THICKNESS
- 200 — DENOTES 200 SLAB THICKNESS
- DENOTES BEAM REBATE/ EXTERNAL SLAB LOCATIONS
- DENOTES BLOCKWORK WALL
- DENOTES BRICKWORK WALL
- DENOTES DIRECTION OF LOAD BEARING RIBS IN BONDEK

CONCRETE ELEMENTS:

STRUCTURAL ELEMENT	BLINDING	SLAB / FOOTINGS
EXPOSURE CLASSIFICATION	B1	A1
STRENGTH GRADE (MPa)	N15	N25
MIN. DENSITY (kg/m^3)	-	2350
MAX. AGGREGATE SIZE (mm)	20	20
CEMENT TYPE	GP	GP

FOOTING SCHEDULE

MARK	SIZE	REMARKS
EB1	800Wx700D	7-N16 BOTTOM BARS WITH N16 'C' BAR AT 300
EB2	300Wx400D	3-N16 BOTTOM BARS WITH N12 'Z' BAR AT 900
IB1	800Wx 700D	7-N16 BOTTOM BARS WITH N12 'Z' BAR AT 900

COLUMN SCHEDULE

MARK	SIZE	REMARKS
SC1	75x75x3 SHS	STEEL COLUMN

STEEL BEAM SCHEDULE

MARK	SIZE	REMARKS
B1	200 PFC	STEEL BEAM. PROVIDE Ø16 x 75 HIGH SHEAR STUDS @ 600 CTS.

LINTEL BEAM SCHEDULE

MARK	SIZE	REMARKS
LB1	190W x 190D	200 MIN END BEARING REFER TO DETAIL
LB2	190W x 390D	400 MIN END BEARING REFER TO DETAIL

ROOF FRAMING SCHEDULE

MARK	SIZE	REMARKS
BR1	STEEL BRACING	PRYDA SPREEDBRACE SCREW FIXED TO EVERY PURLIN
P1	C 100x12	CONTINUOUS SPAN ROOF PURLIN AT 800 MAX CTS
P2	230FP19	FASCIA PURLIN
T1	STEEL ROOF TRUSS	STEEL FRAME ROOF TRUSSES @ 1300 MAX CTS. TO MANUFACTURER'S DETAILS

No.	REVISION DETAILS	DWN	CKD	APP	DATE
1	REISSUED FOR TENDER	RK	MH	CS	16/04/2021
0	FOR CONSTRUCTION	MC	PK	CS	06/07/2016

CONSULTANT DETAILS:
GHD
57 Graham Street Nowra NSW 2541 Australia
T 61 2 4424 4900 F 61 2 4424 4999
E noamail@ghd.com W www.ghd.com
Conditions of Use.
This document may only be used by GHD's client (and any other person who GHD has agreed can use this document) for the purpose for which it was prepared and must not be used by any other person or for any other purpose.

CONSULTANT REFERENCE No. 23-1426651-03-246

Shoalhaven Water
A Group of Shoalhaven City Council

DESIGNED: A. FUERTES	DATE: 16/02/2016	COMPANY: GHD	TITLE: SHOALHAVEN WATER
DRAWN: M. CRUZ	DATE: 16/02/2016	COMPANY: GHD	LYREBIRD PARK NOWRA SPS2 UPGRADE
CHECKED: P. KAMPFF	DATE: 05/07/2016	COMPANY: GHD	SWITCHROOM BUILDING
APPROVED: C. SINGLETON	DATE: 06/07/2016	COMPANY: GHD	FOUNDATION, FRAMING PLANS, ELEVATION AND NOTES

SIZE	SCALE	INDEX No.	DRAWING No.	SHEET	REV No.
A1	AS SHOWN		24356	246	1

Plot Date: 29/06/2017 7:09:35 PM
Cad File No: C:\Users\nbpalalon\Documents\7112381_LYREBIRD PARK SPS SWITCHROOM_nbpalalon.rvt

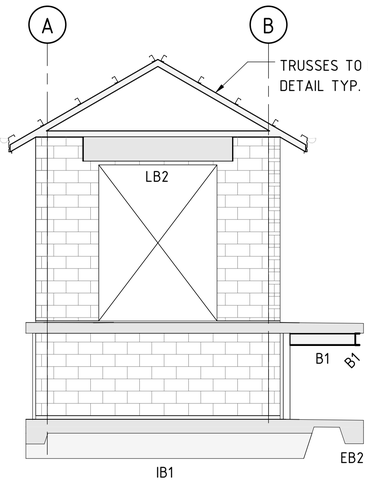

B 246 ELEVATION
SCALE 1 : 50

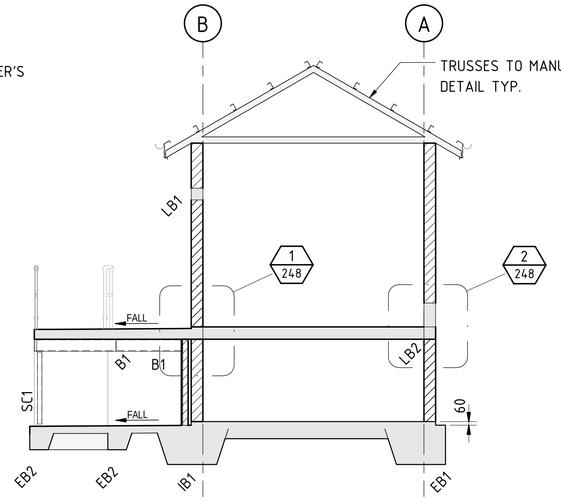

C 246 SECTION
SCALE 1 : 50

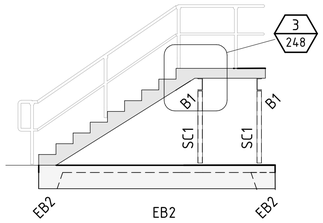

D 246 SECTION
SCALE 1 : 50

NOTES:

1. REFER TO ARCHITECTURAL DRAWINGS FOR ALL LEVELS, SETOUT, DIMENSIONS, SLAB SETDOWNS, CONTROL JOINT DETAILS, HOBS AND FALLS.
2. REFER TO DRAWINGS 24356-243 AND 244 FOR STRUCTURAL NOTES.

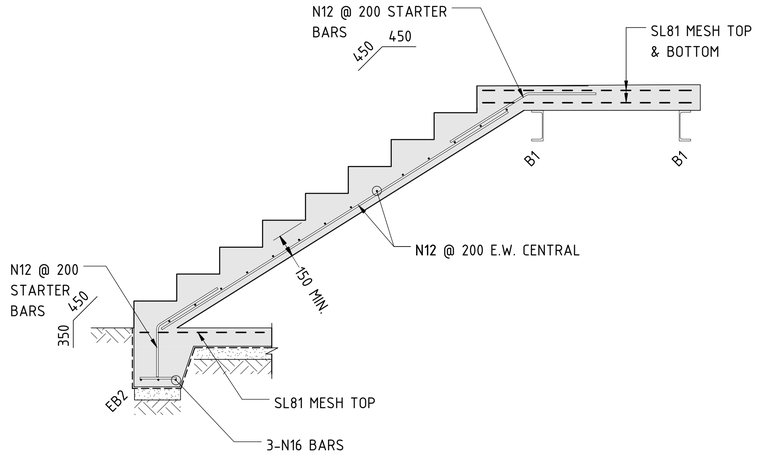

STAIR REINFORCEMENT DETAIL
SCALE 1 : 20

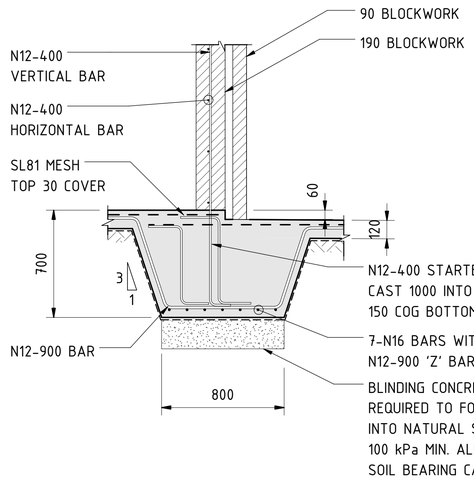

TYPICAL INTERNAL BEAM (IB1)
SCALE 1 : 20

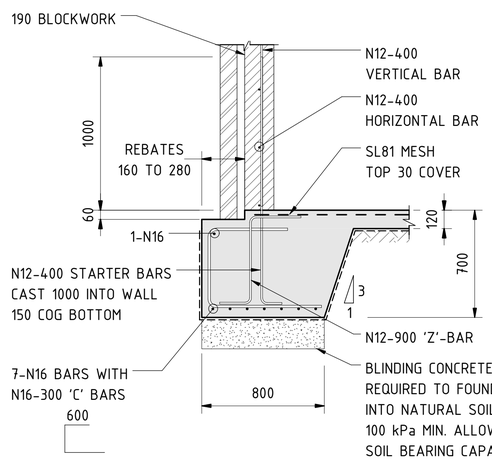

TYPICAL EDGE BEAM (EB1)
SCALE 1 : 20

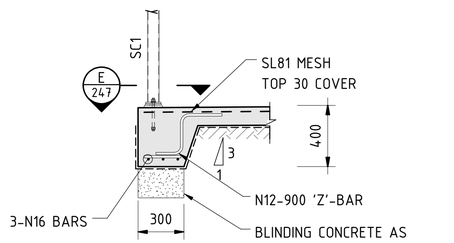

TYPICAL EDGE BEAM (EB2)
SCALE 1 : 20

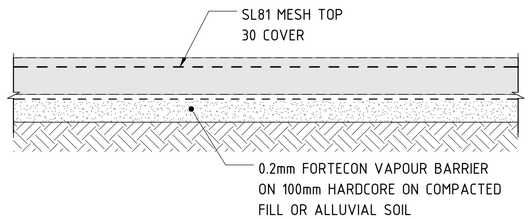

TYPICAL SLAB DETAIL
SCALE 1 : 10

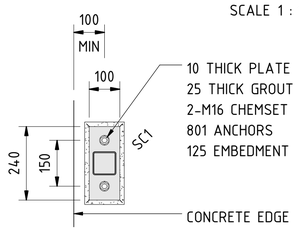

TYPICAL BASE PLATE DETAIL

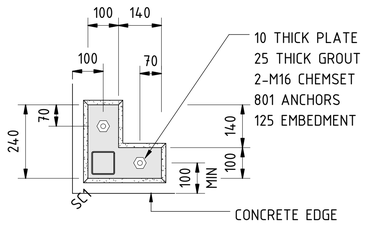

TYPICAL CORNER BASE PLATE DETAIL

E 247 SECTION
SCALE 1 : 10

0 100 200 300 400 500 mm
SCALE 1:10 AT ORIGINAL SIZE

0 200 400 600 800 1000 mm
SCALE 1:20 AT ORIGINAL SIZE

0 500 1000 1500 2000 2500 mm
SCALE 1:50 AT ORIGINAL SIZE

No.	REVISION DETAILS	DWN	CKD	APP	DATE
1	REISSUED FOR TENDER	RK	MH	CS	16/04/2021
0	FOR CONSTRUCTION	MC	PK	CS	06/07/2016

CONSULTANT DETAILS:
GHD
57 Graham Street Nowra NSW 2541 Australia
T 61 2 4424 4900 F 61 2 4424 4999
E noamail@ghd.com W www.ghd.com
Conditions of Use.
This document may only be used by GHD's client (and any other person who GHD has agreed can use this document) for the purpose for which it was prepared and must not be used by any other person or for any other purpose.
CONSULTANT REFERENCE No.
23-1426651-03-247

Shoalhaven Water
A Group of Shoalhaven City Council

DESIGNED: A. FUERTES	DATE: 16/02/2016	COMPANY: GHD	TITLE: SHOALHAVEN WATER LYREBIRD PARK NOWRA SPS2 UPGRADE SWITCHROOM BUILDING SECTIONS AND DETAILS SHEET 1
DRAWN: M. CRUZ	DATE: 16/02/2016	COMPANY: GHD	
CHECKED: P. KAMPFF	DATE: 05/07/2016	COMPANY: GHD	
APPROVED: C. SINGLETON	DATE: 06/07/2016	COMPANY: GHD	SIZE: A1 / SCALE: AS SHOWN / INDEX No. / DRAWING No. 24356 / SHEET 247 / REV No. 1

Plot Date: 29/06/2017 7:09:36 PM
Cad File No: C:\Users\nbpalalon\Documents\7112381_LYREBIRD PARK SPS SWITCHROOM_nbpalalon.rvt

NOTES:

1. REFER TO ARCHITECTURAL DRAWINGS FOR ALL LEVELS, SETOUT, DIMENSIONS, SLAB SETDOWNS, CONTROL JOINT DETAILS, HOBS AND FALLS.
2. REFER TO DRAWINGS 24356-243 AND 244 FOR STRUCTURAL NOTES.

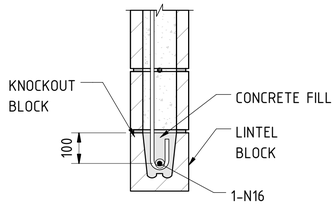

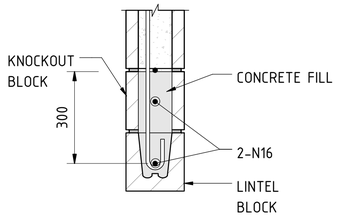

LINTEL BEAM DETAIL (LB1)
SCALE 1 : 10

LINTEL BEAM DETAIL (LB2)
SCALE 1 : 10

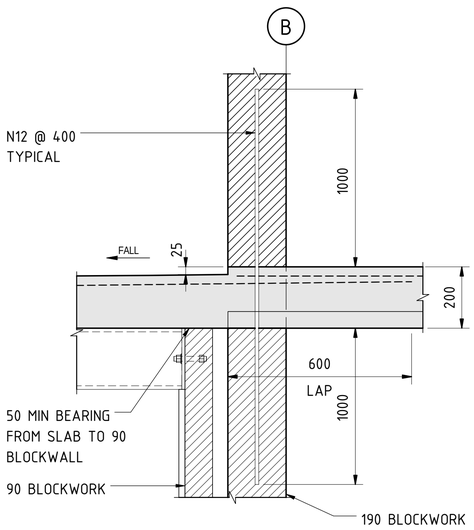

1/247 DETAIL SCALE 1 : 10

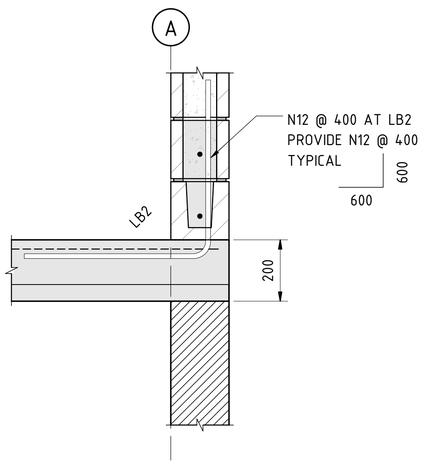

2/247 DETAIL SCALE 1 : 10

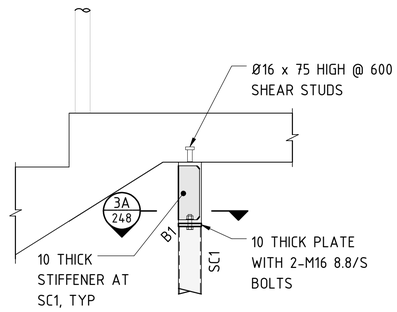

3/247 DETAIL SCALE 1 : 10

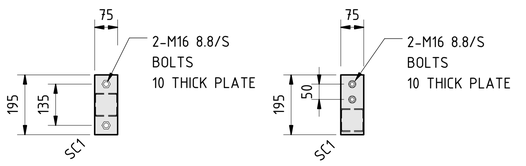

TYPICAL CAP PLATE TYPICAL CORNER CAP PLATE

3A/248 SECTION SCALE 1 : 10

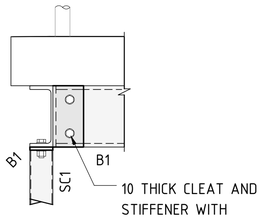

H/246 SECTION SCALE 1 : 10

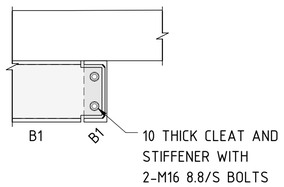

J/246 SECTION SCALE 1 : 10

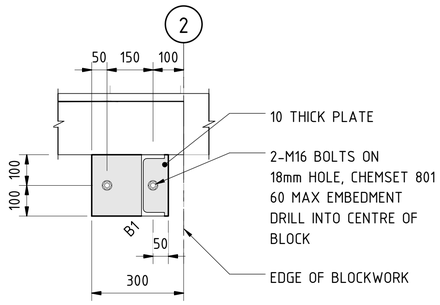

K/246 SECTION SCALE 1 : 10

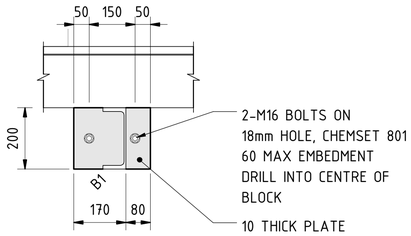

L/246 SECTION SCALE 1 : 10

0 100 200 300 400 500 mm
SCALE 1:10 AT ORIGINAL SIZE

No.	REVISION DETAILS	DWN	CKD	APP	DATE
1	REISSUED FOR TENDER	RK	MH	CS	16/04/2021
0	FOR CONSTRUCTION	MC	PK	CS	06/07/2016

CONSULTANT DETAILS:
GHD
57 Graham Street Nowra NSW 2541 Australia
T 61 2 4424 4900 F 61 2 4424 4999
E noamail@ghd.com W www.ghd.com

Conditions of Use.
This document may only be used by GHD's client (and any other person who GHD has agreed can use this document) for the purpose for which it was prepared and must not be used by any other person or for any other purpose.

CONSULTANT REFERENCE No. 23-1426651-03-248

Shoalhaven Water
A Group of Shoalhaven City Council

DESIGNED: A. FUERTES	DATE: 18/02/2016	COMPANY: GHD	TITLE: SHOALHAVEN WATER LYREBIRD PARK NOWRA SPS2 UPGRADE SWITCHROOM BUILDING SECTIONS AND DETAILS SHEET 2
DRAWN: M. CRUZ	DATE: 18/02/2016	COMPANY: GHD	
CHECKED: P. KAMPFF	DATE: 05/07/2016	COMPANY: GHD	
APPROVED: C. SINGLETON	DATE: 06/07/2016	COMPANY: GHD	SIZE: A1 SCALE: AS SHOWN INDEX No. DRAWING No. 24356 SHEET 248 REV No. 1

PUMPING STATIONS ELECTRICAL SERVICES DRAWINGS

DRG. No.	DRAWING TITLE
24356-250	DRAWING LIST
24356-251	SCA - SINGLE LINE DIAGRAM SHEET 1 OF 2
24356-252	SCA - SINGLE LINE DIAGRAM SHEET 2 OF 2
24356-254	DISTRIBUTION SINGLE LINE DIAGRAM
24356-255	TELEMETRY INTERFACE DETAILS
24356-256	INCOMING POWER SUPPLY SCHEMATIC DIAGRAM
24356-257	MOTOR STARTER CIRCUIT DIAGRAM SHEET 1 OF 3
24356-258	MOTOR STARTER CIRCUIT DIAGRAM SHEET 2 OF 3
24356-259	MOTOR STARTER CIRCUIT DIAGRAM SHEET 3 OF 3
24356-261	AUTO CONTROL DISTRIBUTION SCHEMATIC DIAGRAM SHEET 1 OF 2
24356-262	AUTO CONTROL DISTRIBUTION SCHEMATIC DIAGRAM SHEET 2 OF 2
24356-263	INSTRUMENTATION LOOPS
24356-264	AUTO CONTROL I/O MODULE SCHEMATIC DIAGRAM SHEET 1 OF 5
24356-265	AUTO CONTROL I/O MODULE SCHEMATIC DIAGRAM SHEET 2 OF 5
24356-266	AUTO CONTROL I/O MODULE SCHEMATIC DIAGRAM SHEET 3 OF 5
24356-267	AUTO CONTROL I/O MODULE SCHEMATIC DIAGRAM SHEET 4 OF 5
24356-268	AUTO CONTROL I/O MODULE SCHEMATIC DIAGRAM SHEET 5 OF 5
24356-269	TYPICAL GENERATOR CONNECTION BOX DETAILS
24356-275	SITE LAYOUT
24356-277	TYPICAL SWITCHROOM DETAILS SHEET 1 OF 2
24356-278	TYPICAL SWITCHROOM DETAILS SHEET 2 OF 2
24356-279	TYPICAL AREA LIGHTING COLUMN DETAILS
24356-280	VSD BACK CHANNEL COOLING INST, DUCT, IN-BACK/OUT-BACK D1H DETAILS SHEET 1 OF 2
24356-281	VSD BACK CHANNEL COOLING INST, DUCT, IN-BACK/OUT-BACK D1H DETAILS SHEET 2 OF 2
24356-282	TYPICAL VSD BACK-CHANNEL COOLING INSTALLATION DETAILS
24356-291	CABLE SHEDULE SHEET 1 OF 3
24356-292	CABLE SHEDULE SHEET 2 OF 3
24356-293	CABLE SHEDULE SHEET 2 OF 3
24356-301	SCA CABLE ZONE B0 INTERCONNECTION DIAGRAM
24356-302.1	SCA CABLE ZONE D0 INTERCONNECTION DIAGRAM (1 OF 4)
24356-302.2	SCA CABLE ZONE D0 INTERCONNECTION DIAGRAM (2 OF 4)
24356-302.3	SCA CABLE ZONE D0 INTERCONNECTION DIAGRAM (3 OF 4)
24356-302.4	SCA CABLE ZONE D0 INTERCONNECTION DIAGRAM (4 OF 4)
24356-303	SCA CABLE ZONE G0 INTERCONNECTION DIAGRAM
24356-304	PUMP No.1 VSD INTERCONNECTION DIAGRAM
24356-305	PUMP No.2 VSD INTERCONNECTION DIAGRAM
24356-306	TELEMETRY RTU INTERCONNECTION DIAGRAM
24356-311	TYPICAL PUMPING STATION B3 SCA GENERAL ARRANGEMENT
24356-312	TYPICAL PUMPING STATION B3 SCA GENERAL ARRANGEMENT - NO DOORS
24356-313	TYPICAL PUMPING STATION B3 SCA SECTIONS
24356-314	TYPICAL PUMPING STATION B3 SCA EQUIPMENT LAYOUT - EXTERNAL
24356-315	TYPICAL PUMPING STATION B3 SCA EQUIPMENT LAYOUT - INTERNAL
24356-316.1	TYPICAL PUMPING STATION B3 EQUIPMENT SCHEDULE (1 OF 3)
24356-316.2	TYPICAL PUMPING STATION B3 EQUIPMENT SCHEDULE (2 OF 3)
24356-316.3	TYPICAL PUMPING STATION B3 EQUIPMENT SCHEDULE (3 OF 3)

No.	REVISION DETAILS	DWN	DATE
1	REISSUED FOR TENDER	RK	16.04.21
0	ISSUED FOR CONSTRUCTION	VP	27.10.16

CONSULTANT DETAILS:
GHD
57 Graham Street Nowra NSW 2541
T 61 2 4424 4900 F 61 2 4424 4999
E noamail@ghd.com W www.ghd.com

CONSULTANT REFERENCE No.
23-1426651

Shoalhaven Water
A Group of Shoalhaven City Council

DESIGNED:	CP	DATE: 02.2016	COMPANY: GHD
DRAWN:	KT	DATE: 02.2016	COMPANY: GHD
CHECKED:	DB	DATE: 10.2016	COMPANY: GHD
APPROVED:	CS	DATE: 11.2016	COMPANY: GHD

TITLE:
SHOALHAVEN WATER
LYREBIRD PARK NOWRA SPS2 UPGRADE
ELECTRICAL SERVICES
DRAWING LIST

SIZE:	SCALE:	INDEX No.	DRAWING No.	SHEET	REV No.
A1	N.T.S.		23-24356	250	1

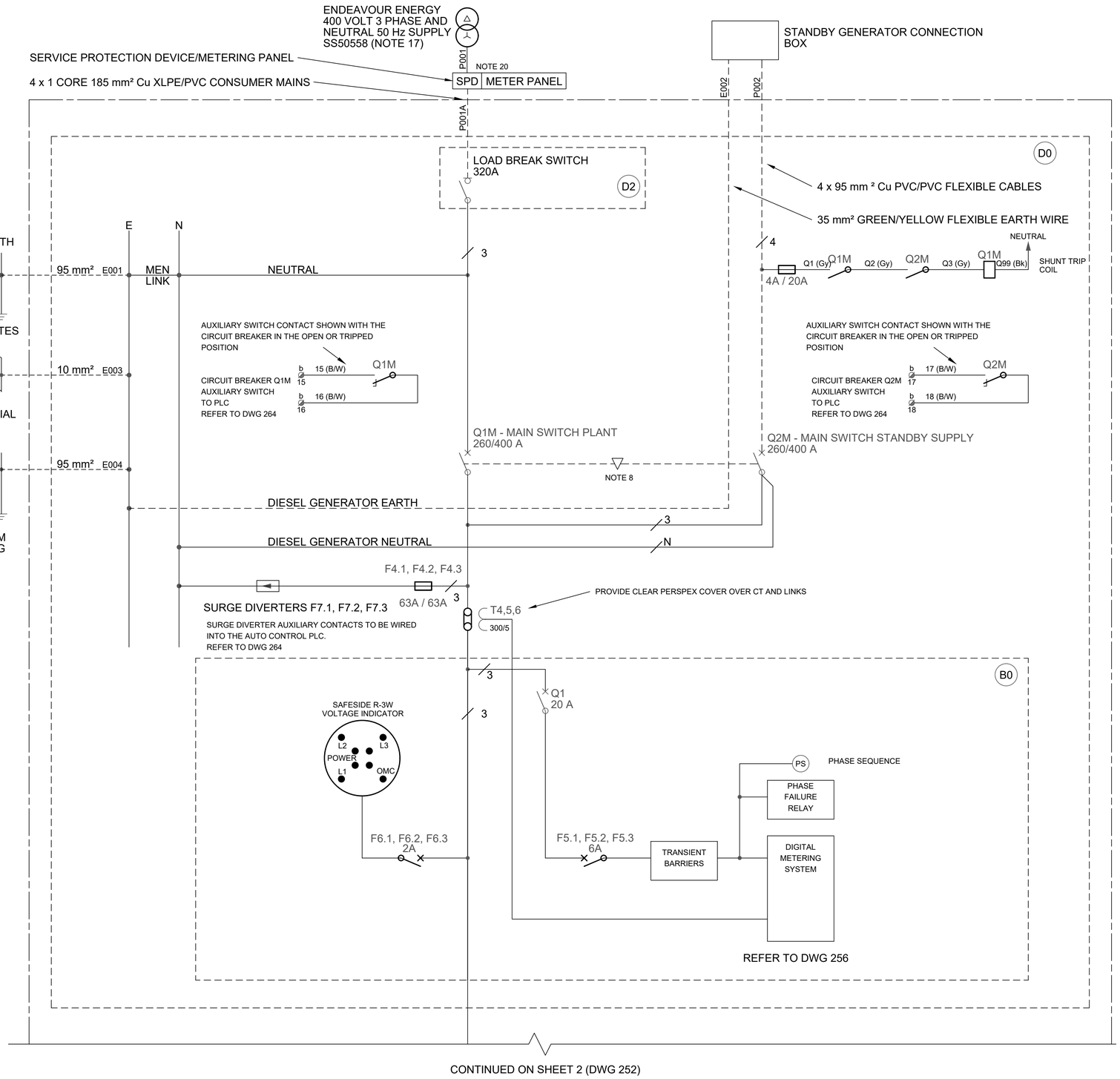

SINGLE LINE DIAGRAM NOTES

1 THE SCA SHALL BE CAPABLE OF WITHSTANDING A FAULT LEVEL OF 30 kA AT THE INCOMING TERMINALS. THE BUSBARS ON THE LINE AND LOAD SIDES OF THE MAIN SWITCHES, SHALL HAVE AN INTRINSICALLY RATED FAULT LEVEL OF 30kA.

2 FAULT CURRENT LIMITING BY CASCADE PROTECTION OF CIRCUIT BREAKERS MAY BE CARRIED OUT PROVIDED THAT THE CIRCUIT BREAKERS PROVIDE TOTAL DISCRIMINATION - THAT IS THE DOWN STREAM CIRCUIT BREAKER WILL TRIP BEFORE THE UPSTREAM CIRCUIT BREAKER.

3 SCA SHALL BE CONSTRUCTED IN ACCORDANCE WITH THE REQUIREMENTS OF A SERIES 'DT' SWITCHBOARD, WITH FORM 3b SEGREGATION. THE SCA IS REQUIRED TO BE TYPE TESTED TO THE REQUIREMENTS OF MEW E101 AND AS 3439.1. THE SCA SHALL HAVE A DEGREE OF PROTECTION OF IP51 AFTER INSTALLATION IN ACCORDANCE WITH THE MANUFACTURERS INSTRUCTIONS.

4 THE COMMON EARTH ELECTRODE SHALL COMPLY WITH THE REQUIREMENTS OF AS 3000 AND AS 1768. THE RESISTANCE TO EARTH IS REQUIRED TO BE LESS THAN 10 OHMS. CARRY OUT EARTH RESISTANCE TESTING TO VERIFY THE RESISTANCE TO EARTH IS LESS THAN 10 OHMS. WHERE THE RESISTANCE TO EARTH IS GREATER THAN 10 OHMS ADDITIONAL EARTH ELECTRODES SHALL BE SUPPLIED AND INSTALLED. THE LOCATION AND METHOD OF INTERCONNECTION OF THE EARTH ELECTRODES SHALL BE DETERMINED ON SITE IN CONSULTATION WITH THE PRINCIPAL. IF ADDITIONAL EARTH ELECTRODES ARE REQUIRED THE ELECTRODES SHALL BE A VARIATION TO CONTRACT.

5 THE STANDBY DIESEL GENERATOR SHALL BE CONNECTED TO THE SCA IN ACCORDANCE WITH THE REQUIREMENTS OF THE LOCAL ENERGY AUTHORITY. PROVIDE ALL LABELLING AS DETAILED IN THE NEW SOUTH WALES SERVICES AND INSTALLATION RULES AND AS REQUIRED BY THE LOCAL ENERGY AUTHORITY.

6 THE INSTALLATION SHALL COMPLY WITH THE REQUIREMENTS OF AS 3010.1 - ELECTRICAL INSTALLATION - SUPPLY BY GENERATING SET, PART 1: INTERNAL COMBUSTION ENGINE DRIVEN SET.

7 THE CIRCUIT BREAKERS SHALL BE GRADED TO PROVIDE CO-ORDINATION WITH THE LOCAL ENERGY AUTHORITY'S PROTECTION EQUIPMENT, MAIN SWITCHES AND DOWN STREAM CIRCUIT BREAKERS. THE CONTRACTOR SHALL CONFIRM ALL CIRCUIT BREAKER SIZES AND SETTINGS AND SUBMIT CO-ORDINATION CURVES FOR THE INSTALLATION.

8 Q1M (MAIN SWITCH) AND Q2M SHALL BE MECHANICALLY INTERLOCKED SO THAT ONLY ONE BREAKER CAN BE "CLOSED" AT ANY GIVEN TIME.

9 SURGE DIVERTERS SHALL BE EQUAL TO NOVARIS SD3-120.

10 THE SURGE DIVERTERS SHALL BE INSTALLED TO THE MANUFACTURER'S RECOMMENDATIONS IN THE NON-PREFERRED 'T' TYPE CONNECTION. SUPPLY AND INSTALL FUSE PROTECTION TO THE 'T' CABLES. WIRING FROM BUSBARS TO FUSES & FUSES TO SURGE DIVERTERS SHALL EACH NOT EXCEED 100 mm.

11 VARIABLE SPEED DRIVES MOTOR STARTERS SHALL HAVE TYPE '2' CO-ORDINATION. SUBMIT DATA FROM SWITCHGEAR SUPPLIER CONFIRMING TYPE '2' CO-ORDINATION BETWEEN THE CIRCUIT BREAKER, CONTACTOR, SEMICONDUCTOR FUSES IF APPLICABLE AND THE VARIABLE SPEED DRIVE.

12 THE RATING OF THE MOTOR STARTERS, IN TERM OF kW AND CURRENT, SHALL CONSTITUTE THE LOWEST PERMISSIBLE OFFERED RATING OF ALL CURRENT CARRYING PARTS OF THE EQUIPMENT OFFERED. THE BASIS OF CONDUCTOR AREA SIZING SHALL BE THAT, WITH AN AMBIENT TEMPERATURE OF 45 °C AND A FLOW OF MAXIMUM POSSIBLE LOAD CURRENT, THE CONDUCTOR TEMPERATURE SHALL BE LOWER THAN 75°C.

13 THE DRAWINGS INDICATE FULL SIZE NEUTRAL CONDUCTOR FOR THE CONSUMERS MAINS. THE CURRENT CARRYING CAPACITY OF THE NEUTRAL CONDUCTOR MAY BE REDUCED IN ACCORDANCE WITH THE REQUIREMENTS OF AS 3000 TAKEN INTO ACCOUNT THE HARMONIC CURRENTS GENERATED.

14 THE CABLE SIZES INDICATED ON THE DRAWING HAVE BEEN CALCULATED WITHOUT ANY DERATING FACTORS. WHERE THE INSTALLATION CONDITIONS RESULT IN CABLES BEING DERATED, THE CABLE SIZES SHALL BE RECALCULATED BY THE CONTRACTOR IN ACCORDANCE WITH THE REQUIREMENTS OF AS 3008.1.

15 THE CABLING FOR THE MOTOR POWER, SEAL FAILURE AND MOTOR THERMAL SWITCHES SHALL BE INTEGRALLY ATTACHED TO THE RESPECTIVE SUBMERSIBLE PUMP-MOTOR ASSEMBLY. THESE CABLE SHALL BE FLEXIBLE, SCREENED SUBMERSIBLE CABLES IN ACCORDANCE WITH THE SPECIFICATION.

16 THE AS- INSTALLED CONDUCTOR SIZE FOR ALL INTEGRALLY ATTACHED CONTROL AND POWER CABLING SHALL BE USED TO REPLACE THE ENTRIES "XXX" AS PART OF THE WORK AS EXECUTED DRAWINGS.

17 CURRENT L3 DESIGN (AKH DESIGN SERVICES P/L 11TH FEB 2016 REV A) IS NOT CERTIFIED. THE FINAL LV CIRCUIT FUSES CURRENTLY SHOWN AS 250A WILL NEED TO BE REVISED ACCORDING TO THE MAXIMUM DEMAND. THE CONSUMER MAINS SHOWN IS INDICATIVE ONLY. CONSUMER MAINS WILL NEED TO BE SIZED BY THE ELECTRICAL INSTALLATION CONTRACTOR ACCORDING TO THE EXACT LOCATION OF POINT OF ATTACHMENT (ROUTE LENGTH) AND ACTUAL MAXIMUM DEMAND.

18 ALL CABLING RUN/ROUTED UNDERNEATH SWITCHROOM FLOOR SHALL BE CORRECTLY SEGREGATED ADEQUATELY SIZED CABLE LADDER/TRAY SHALL BE USED. CABLE LADDER/TRAY SHALL BE DEDICATED TO VOLTAGE/SIGNAL TYPE. SEPARATE CABLE LADDER/TRAY SHALL BE USED FOR LV, ELV AND INSTRUMENT SIGNALS. ALL CABLE LADDER/TRAY SHALL BE TIED TO EARTH BY SUITABLY SIZED EARTH STRAP CONDUCTOR.

19 NEUTRALS IN DISTRIBUTION BOARDS TO BE APPROPRIATELY IDENTIFIED IN ACCORDANCE WITH AS 3000 AND LOGICALLY ORDERED IN NEUTRAL BAR.

20 SPD/METERING PANEL LOCATED AT SPS BOUNDARY FENCE. REFER TO DWG 275 FOR LOCATION. PANEL SHALL HOUSE SPD AND DOWNSTREAM FEED CIRCUIT BREAKERS INCLUDING METERING CURRENT TRANSFORMERS (CTs). REFER TO PRINCIPAL FOR DETAILS.

No.	REVISION DETAILS	DWN	DATE
1	REISSUED FOR TENDER	RK	16.04.21
0	ISSUED FOR CONSTRUCTION	VP	27.10.16

CONSULTANT DETAILS:
GHD
57 Graham Street Nowra NSW 2541
T 61 2 4424 4900 F 61 2 4424 4999
E noamail@ghd.com W www.ghd.com

CONSULTANT REFERENCE No. 23-1426651

Shoalhaven Water
A Group of Shoalhaven City Council

DESIGNED: CP	DATE: 02.2016	COMPANY: GHD	
DRAWN: KT	DATE: 02.2016	COMPANY: GHD	
CHECKED: DB	DATE: 10.2016	COMPANY: GHD	
APPROVED: CS	DATE: 11.2016	COMPANY: GHD	

TITLE:
SHOALHAVEN WATER
LYREBIRD PARK NOWRA SPS2 UPGRADE
ELECTRICAL SERVICES
SCA - SINGLE LINE DIAGRAM
SHEET 1 OF 2

SIZE	SCALE	INDEX No.	DRAWING No.	SHEET	REV No.
A1	N.T.S.		23-24356	251	1

Plot Date: 15/04/21 - 20:19 Cad File: C:\CAD\temp\AcPublish_842032\23-24356-251.dwg

NOTES

1 NEUTRALS IN DISTRIBUTION BOARDS TO BE APPROPRIATELY IDENTIFIED IN ACCORDANCE WITH AS 3000 AND LOGICALLY ORDERED IN NEUTRAL BAR.

VSD TO PUMP CABLE ROUTING DETAILS

CABLE	CONDUIT
P102A	11
P102B	12
C102, C202	13
P202A	14
P202B	15

*PROPRIETARY POWER CABLES FROM PUMPS TO VSDs SHALL BE RUN IN SEPERATE CONDUITS TO LIMIT CABLE DE-RATING

CABLE SCHEDULE

DRIVE	CABLE SIZE
SCA TO VSD	3 CORE + E 70 mm² XLPE/PVC/CIR POWER
SCA TO PUMP NO-FLOW SWITCH	1PR + SCN 1.5 mm² OVERALL FOIL SCREEN WITH DRAIN WIRE CONTROL

INTERCONNECTING CONTROL WIRING BETWEEN THE MOTOR STARTERS, AUTO CONTROL AND THE VARIABLE SPEED DRIVES NOT INDICATED.

ALL LOW VOLTAGE INTERFACES (EG. FIELD ISOLATORS) SHALL BE INTERFACED USING PVC/PVC/CIR CONTROL CABLES.

WHERE DRIVES ARE SUPPLIED WITH ADDITIONAL PROTECTION DEVICES THAN THAT INDICATED ON THE DRAWINGS SUPPLY AND INSTALL A SCREENED CABLE WITH ADEQUATE NUMBER OF CONTROL CORES.

CONTINUED FROM SHEET 1 (DWG 251)

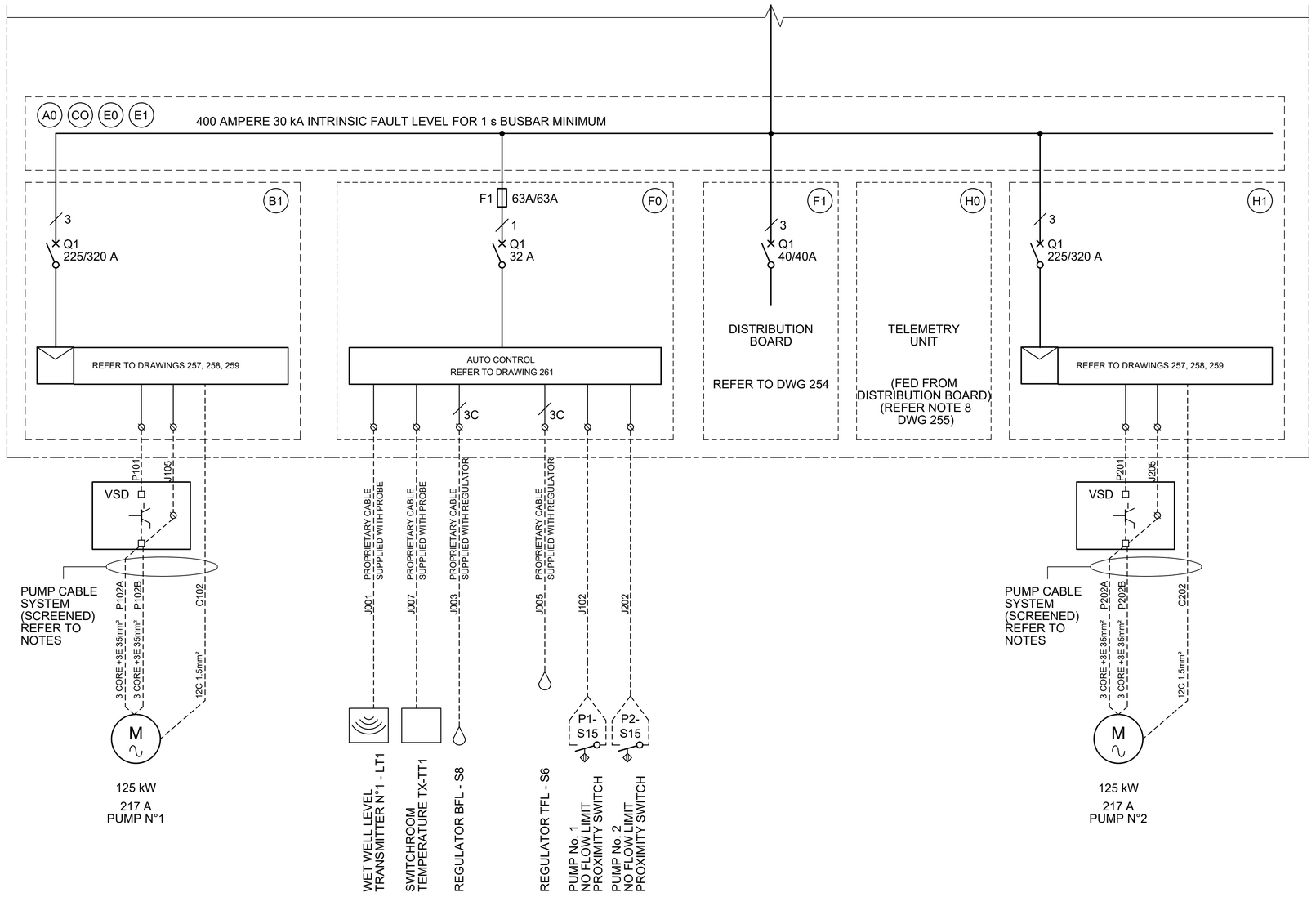

No.	REVISION DETAILS	DWN	DATE
1	REISSUED FOR TENDER	RK	16.04.21
0	ISSUED FOR CONSTRUCTION	VP	27.10.16

CONSULTANT DETAILS:
GHD
57 Graham Street Nowra NSW 2541
T 61 2 4424 4900 F 61 2 4424 4999
E noamail@ghd.com W www.ghd.com

CONSULTANT REFERENCE No.
23-1426651

Shoalhaven Water
A Group of Shoalhaven City Council

DESIGNED: CP	DATE: 02.2016	COMPANY: GHD	
DRAWN: KT	DATE: 02.2016	COMPANY: GHD	
CHECKED: DB	DATE: 10.2016	COMPANY: GHD	
APPROVED: CS	DATE: 11.2016	COMPANY: GHD	

TITLE:
SHOALHAVEN WATER
LYREBIRD PARK NOWRA SPS2 UPGRADE
ELECTRICAL SERVICES
SCA - SINGLE LINE DIAGRAM
SHEET 2 OF 2

SIZE	SCALE	INDEX No.	DRAWING No.	SHEET	REV No.
A1	N.T.S.		23-24356	252	1

Plot Date: 15/04/21 - 20:19 Cad File: C:\CAD\temp\AcPublish_842032\23-24356-252.dwg

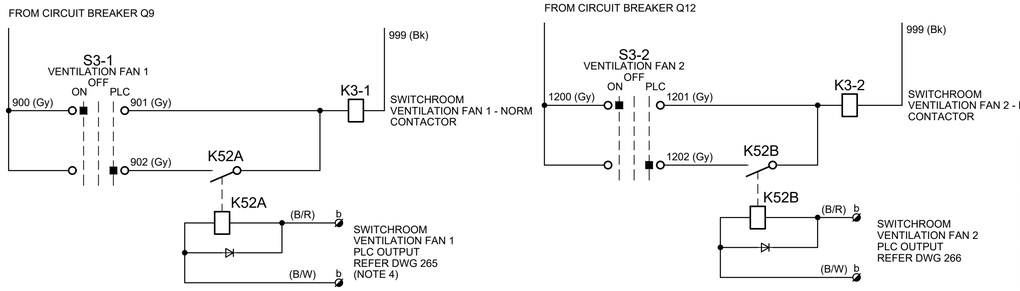

SWITCHROOM VENTILATION FAN CONTROL

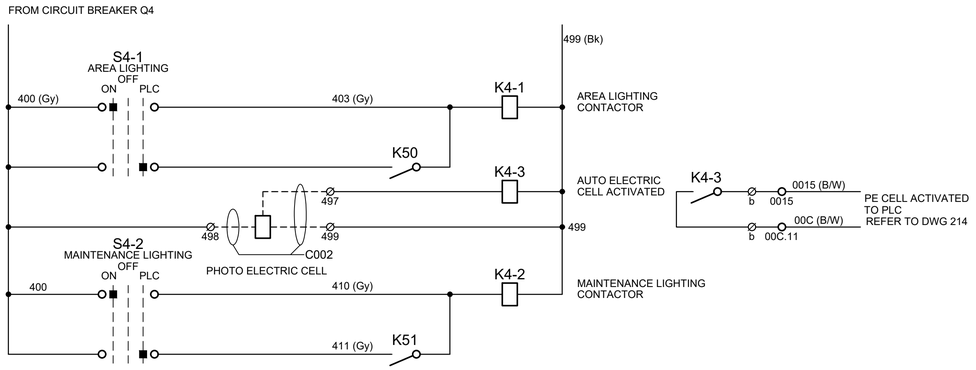

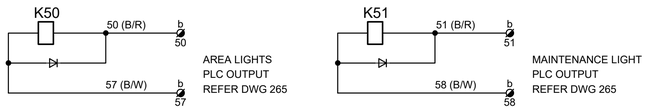

AREA LIGHTING CONTROL

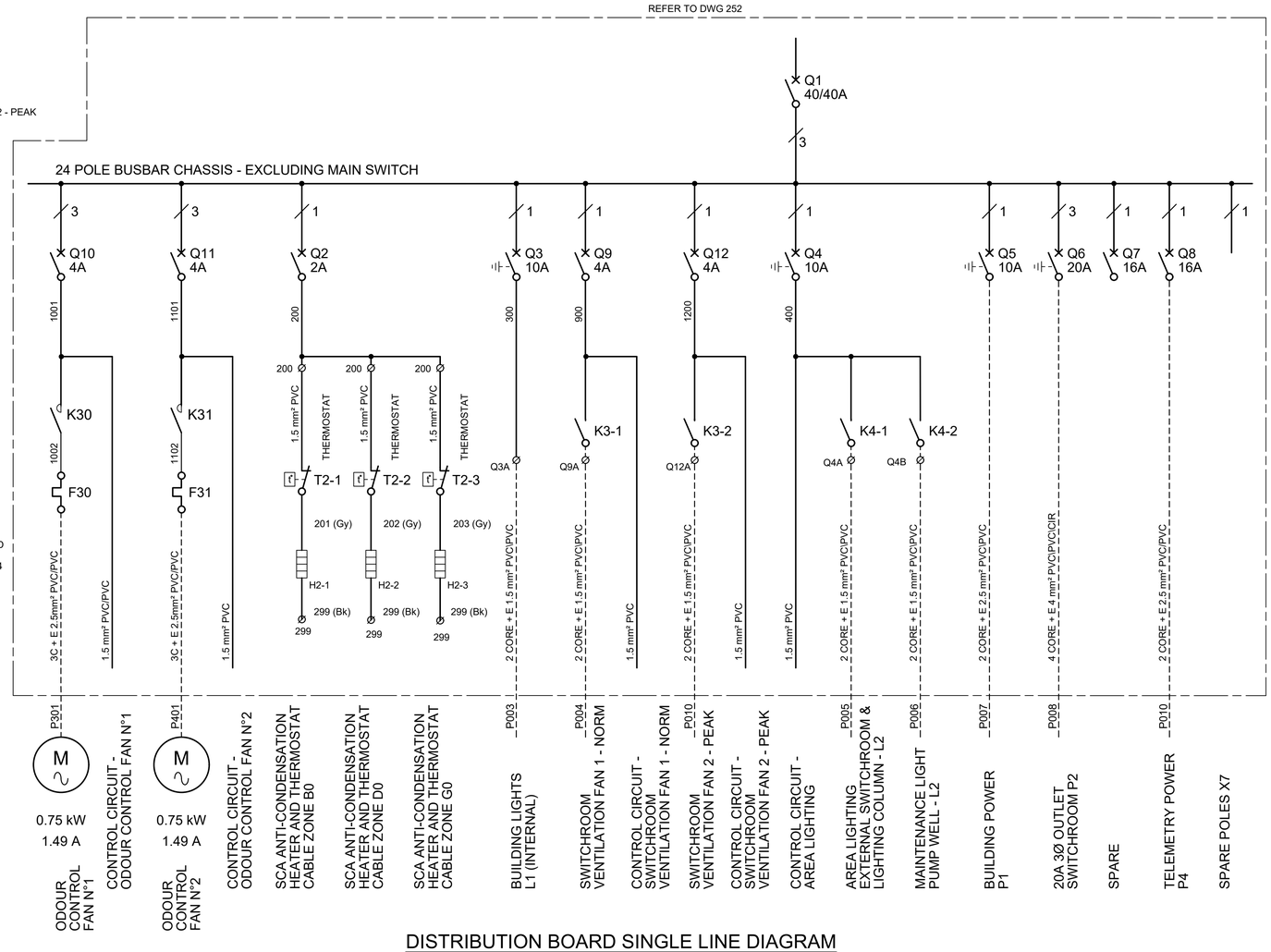

DISTRIBUTION BOARD SINGLE LINE DIAGRAM

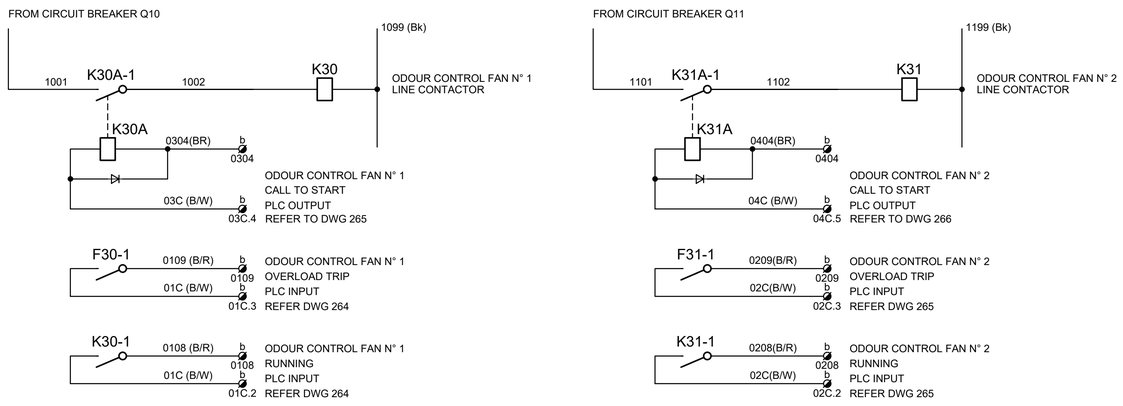

ODOUR FAN CONTROL

LEGEND

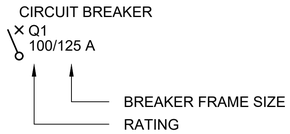

NOTES

1. CONDITIONAL FAULT RATING OF THE DISTRIBUTION BOARD SECTION OF THE SCA SHALL BE 10 kA.
2. THE CABLE SIZES INDICATED ON THE DRAWING HAVE BEEN DE-RATED ACCORDING TO THE INSTALLATION TYPE DESCRIBED IN THE CABLE SCHEDULE. REFER DWG 291. THE CONTRACTOR SHALL CHECK CABLE SIZING & DE-RATING TO ACTUAL INSTALLATION CONDITIONS IN ACCORDANCE WITH AS3008.1.
3. NEUTRALS IN DISTRIBUTION BOARDS TO BE APPROPRIATELY IDENTIFIED IN ACCORDANCE WITH AS 3000 AND LOGICALLY ORDERED IN NEUTRAL BAR.
4. SWITCHROOM VENTILATION FAN 1 SHALL OPERATE CONTINUOUSLY & STOP ONLY IF VENTILATION FAN 2 STARTS (DUE TO INCREASE IN TEMPERATURE > T). VENTILATION FANS ARE CONTROLLED VIA PLC BUT CAN BE OVER-RIDDEN BY CONTROL SWITCH.

No.	REVISION DETAILS	DWN	DATE
1	REISSUED FOR TENDER	RK	16.04.21
0	ISSUED FOR CONSTRUCTION	VP	27.10.16

CONSULTANT DETAILS:
GHD
57 Graham Street Nowra NSW 2541
T 61 2 4424 4900 F 61 2 4424 4999
E noamail@ghd.com W www.ghd.com

CONSULTANT REFERENCE No.
23-1426651

Shoalhaven Water
A Group of Shoalhaven City Council

DESIGNED: CP	DATE: 02.2016	COMPANY: GHD	
DRAWN: KT	DATE: 02.2016	COMPANY: GHD	
CHECKED: DB	DATE: 10.2016	COMPANY: GHD	
APPROVED: CS	DATE: 11.2016	COMPANY: GHD	

TITLE:
SHOALHAVEN WATER
LYREBIRD PARK NOWRA SPS2 UPGRADE
ELECTRICAL SERVICES
DISTRIBUTION SINGLE LINE DIAGRAM

SIZE	SCALE	INDEX No.	DRAWING No.	SHEET	REV No.
A1	N.T.S.		23-24356	254	1

Plot Date: 15/04/21 - 20:19 Cad File: C:\CAD\temp\AcPublish_842032\23-24356-254.dwg

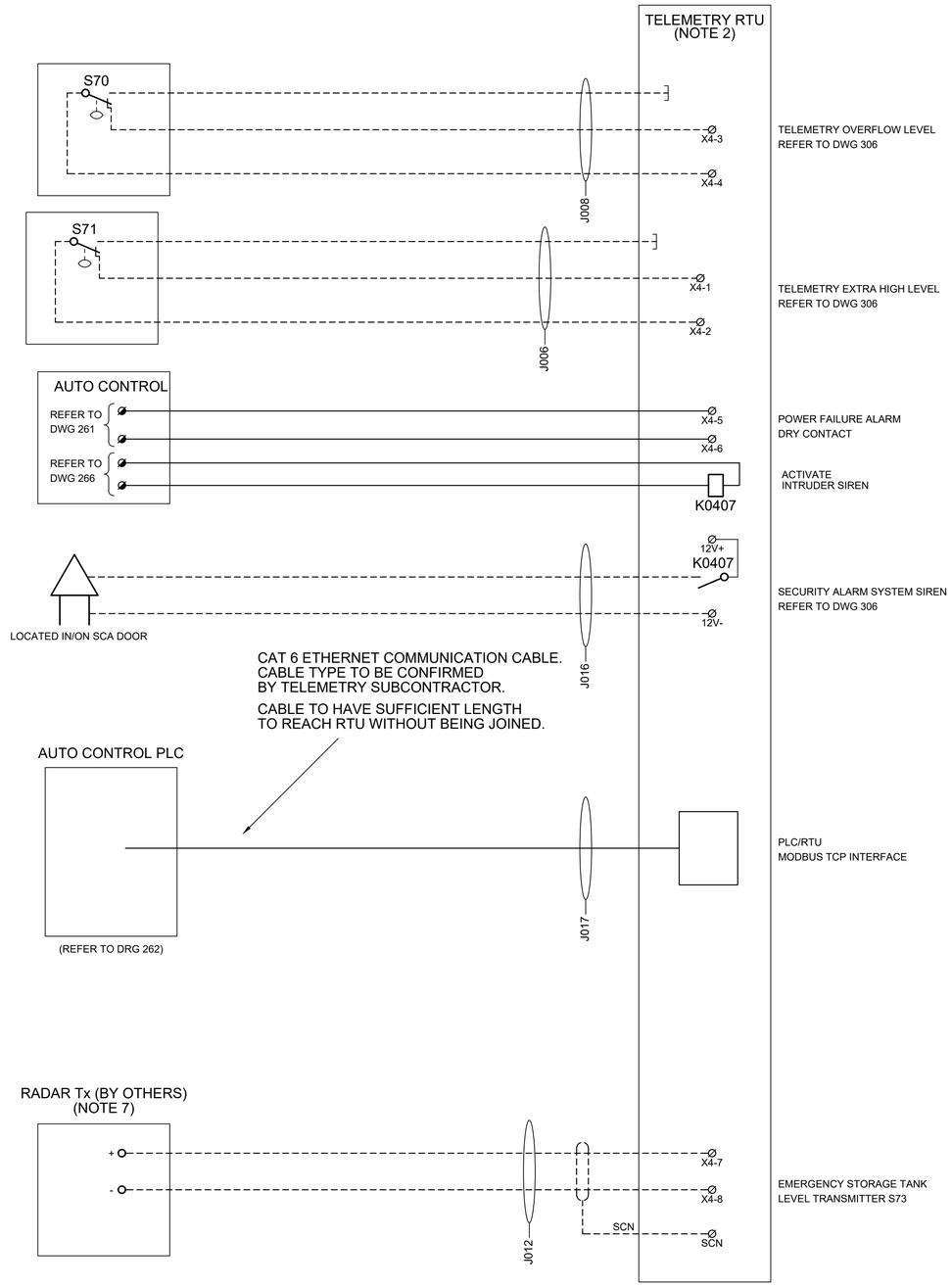

TELEMETRY INTERCONNECTION DETAILS

NOTES

1. EQUIPMENT TERMINAL NUMBERING SHALL COMPLY WITH IEC STANDARD 947.
2. TELEMETRY RTU LOCATED IN SCA ZONE F1.
3. ALL EXTRA LOW VOLTAGE TERMINALS SHALL BE BLUE IN COLOUR AND SHALL BE SEGREGATED BY MEANS OF SEGREGATION PLATES FROM LOW VOLTAGE TERMINALS.
4. ALL TERMINALS SHALL BE DIN RAILED MOUNTED.
5. ALL WIRES SHALL BE FITTED WITH CABLE MARKERS, WHERE THE WIRE NUMBER IS NOT INDICATED THE WIRE NUMBER SHALL AGREE WITH THE TERMINAL NUMBER OF THE TERMINAL OF WHICH THE WIRE IS INSERTED.
6. FOR WIRE COLOURS REFER TO THE DRAWINGS.
7. RADAR TRANSMITTER SUPPLIED AND INSTALLED BY OTHERS. CONTRACTOR TO SUPPLY, INSTALL AND TERMINATE CABLE.
8. FINAL TELEMETRY REQUIREMENTS TO BE ADVISED OR SHALL BE SUPPLIED BY SHOALHAVEN WATER.

PROPOSED PUMPING STATIONS TELEMETRY ALARMS TO BE OBTAINED FROM PLC BY MODBUS TCP COMMUNICATION LINK

FINAL SIGNALS TO BE CONFIRMED BY SHOALHAVEN WATER

STATUS SIGNALS - POWER SUPPLY

Q1M AUXILIARY STATUS
Q2M AUXILIARY STATUS
SURGE DIVERTERS ALARM
KILOWATT HOURS PULSE - kWh
REACTIVE POWER PULSE - kvar

STATUS SIGNALS - SEWAGE PUMPS

SEWAGE PUMP N°1 NOT AVAILABLE FOR PLC CONTROL
SEWAGE PUMP N°1 RUNNING
SEWAGE PUMP N°1 DRIVE FAULT
SEWAGE PUMP N°1 SEAL FAILURE

SEWAGE PUMP N°2 NOT AVAILABLE FOR PLC CONTROL
SEWAGE PUMP N°2 RUNNING
SEWAGE PUMP N°2 DRIVE FAULT
SEWAGE PUMP N°2 SEAL FAILURE

STATUS SIGNALS - SEWAGE PUMPS AUTO CONTROL

PUMP N°1 FAILED TO START
PUMP N°2 FAILED TO START

DUTY SELECTION - SEWAGE PUMPS

PUMP N°1 DUTY
PUMP N°2 DUTY
PUMP N°1 DUTY PUMP N°2 STANDBY
PUMP N°2 DUTY PUMP N°1 STANDBY
ALTERNATING DUTY SELECTED

STATUS SIGNALS - WELL LEVEL

TELEMETRY EXTRA-HIGH LEVEL (S71) REACHED
TELEMETRY OVERFLOW LEVEL (S70) REACHED
TOP WATER LEVEL (S6) REACHED
BOTTOM WATER LEVEL (S8) REACHED

LOGGING - WELL LEVEL

WELL LEVEL % FROM ANALOGUE LEVEL SENSOR LT1

STATUS SIGNALS - GENERAL

PLC FAULT
SWITCHROOM WARNING THERMOSTAT
PUMP STATION INHIBIT ON
FLOWMETER FAULT

BURGLAR ALARM SIGNALS

DOOR N°1 ALARM (REED) SWITCH
DOOR N°2 ALARM (REED) SWITCH
EXTERNAL KEY SWITCH

STATUS SIGNALS - ODOUR CONTROL FANS

ODOUR CONTROL FAN N° 1 NOT AVAILABLE FOR PLC CONTROL
ODOUR CONTROL FAN N° 1 RUNNING
ODOUR CONTROL FAN N° 1 FAULT
ODOUR CONTROL FAN N° 2 NOT AVAILABLE FOR PLC CONTROL
ODOUR CONTROL FAN N° 2 RUNNING
ODOUR CONTROL FAN N° 2 FAULT

STATUS SIGNALS - ODOUR CONTROL FANS AUTO CONTROL

ODOUR CONTROL FAN N° 1 FAILED TO START
ODOUR CONTROL FAN N° 2 FAILED TO START

LOGGING - EMERGENCY STORAGE TANK LEVEL

EMERGENCY STORAGE TANK LEVEL SENSOR S73

LOGGING - SWITCHROOM TEMPERATURE

SWITCHROOM TEMPERATURE SENSOR TT1

No.	REVISION DETAILS	DWN	DATE
1	REISSUED FOR TENDER	RK	16.04.21
0	ISSUED FOR CONSTRUCTION	VP	27.10.16

CONSULTANT DETAILS:
GHD
57 Graham Street Nowra NSW 2541
T 61 2 4424 4900 F 61 2 4424 4999
E noamail@ghd.com W www.ghd.com

CONSULTANT REFERENCE No.
23-1426651

Shoalhaven Water
A Group of Shoalhaven City Council

DESIGNED: CP	DATE: 02.2016	COMPANY: GHD	
DRAWN: KT	DATE: 02.2016	COMPANY: GHD	
CHECKED: DB	DATE: 10.2016	COMPANY: GHD	
APPROVED: CS	DATE: 11.2016	COMPANY: GHD	

TITLE:
SHOALHAVEN WATER
LYREBIRD PARK NOWRA SPS2 UPGRADE
ELECTRICAL SERVICES
TELEMETRY INTERFACE DETAILS

SIZE	SCALE	INDEX No.	DRAWING No.	SHEET	REV No.
A1	N.T.S.		23-24356	255	1

Plot Date: 15/04/21 - 20:20 Cad File: C:\CAD\temp\AcPublish_842032\23-24356-255.dwg

NOTES

1 ALL EQUIPMENT IS DRAWN FOR PROPRIETARY TYPE UNITS. AMEND THE DRAWINGS TO SUIT THE ACTUAL EQUIPMENT TENDERED.

2 SURGE PROTECTION INDICATED IS THE MINIMUM. SUPPLY AND INSTALL ANY ADDITIONAL SURGE PROTECTION RECOMMENDED BY THE MANUFACTURER.

3 THE PHASE FAILURE/REVERSAL RELAY SHALL HAVE A CHANGEOVER CONTACT WITH A TIME DELAY ON ENERGISE AND DE-ENERGISE AND SHALL MONITOR PHASE ASYMMETRY, SEQUENCE AND LOSS OF PHASE. THE RELAY SHALL BE SUITABLE FOR MOTOR APPLICATIONS. THE RELAY SHALL BE EQUAL TO CARLO GAVAZZI DPB-02-C-M48.

4 THE POWER MONITOR COMPLETE SHALL BE PANEL MOUNTED AND EQUAL SCHNEIDER PM700P POWER MONITOR.

5 ALL TERMINALS SHALL BE TAGGED AT EACH SIDE SUCH THAT THE TAG AGREES EITHER WITH THE NUMBER OF THE WIRE WHICH IS INSERTED IN THAT SIDE OF THE TERMINAL OR WITH THE CIRCUIT DIAGRAM.

6 WIRE TERMINAL AND EQUIPMENT DESIGNATIONS INDICATED ON THE DRAWING ARE INDICATIVE ONLY AND MAY BE AMENDED TO SUIT THE EQUIPMENT AND SYSTEM LAYOUT.

7 ALL EQUIPMENT SHALL BE INSTALLED TO THE MANUFACTURER'S RECOMMENDATIONS.

8 TERMINATE THE EARTH TERMINAL OF THE SURGE PROTECTION DEVICE TO THE MAIN EARTH.

9 EQUIPMENT TERMINALS NUMBERING SHALL COMPLY WITH IEC STANDARD 947.

10 FOR WIRE COLOURS REFER TO THE DRAWINGS.

11 ALL EXTRA LOW VOLTAGE TERMINALS SHALL BE BLUE IN COLOUR.

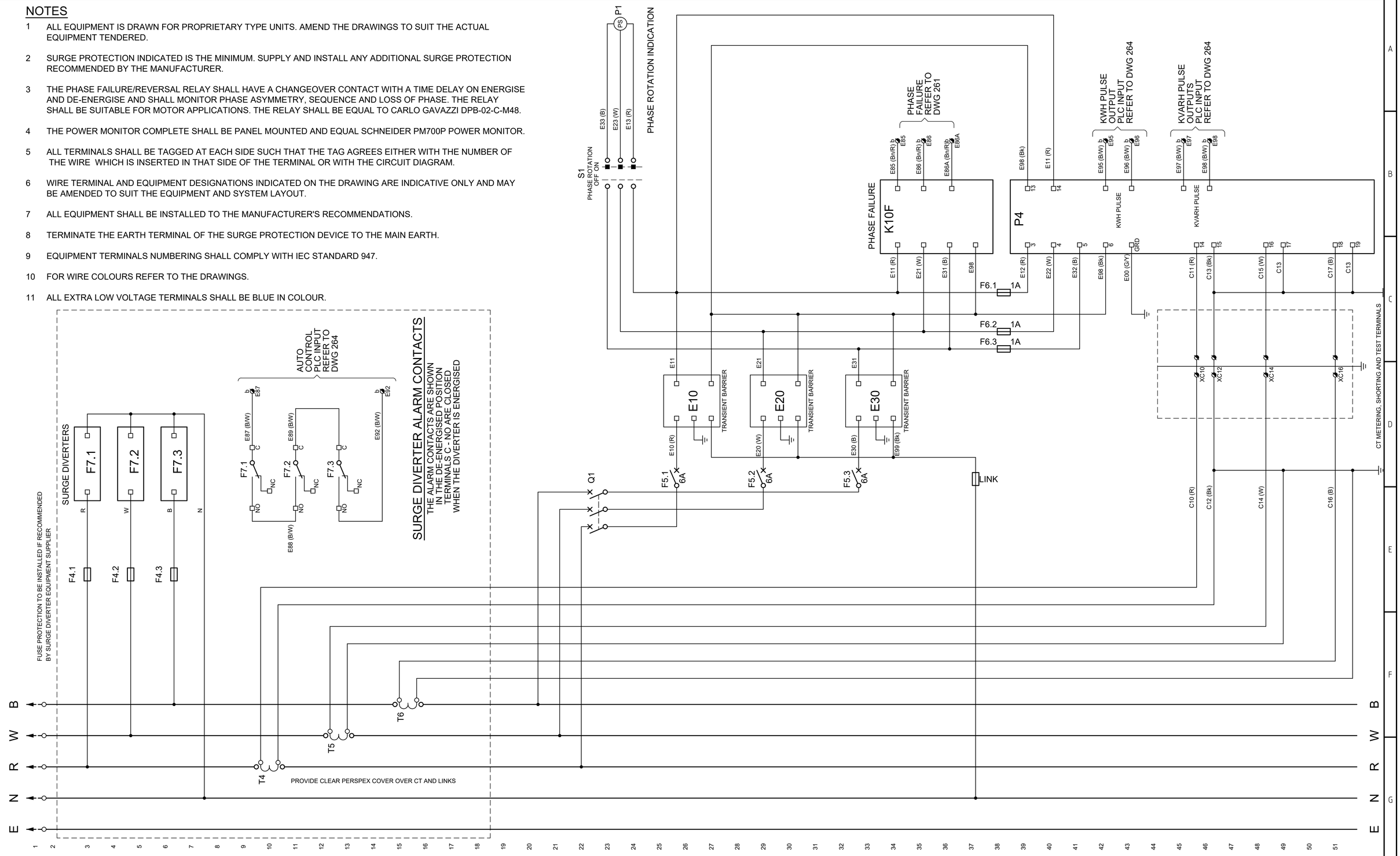

No.	REVISION DETAILS	DWN	DATE
1	REISSUED FOR TENDER	RK	16.04.21
0	ISSUED FOR CONSTRUCTION	VP	27.10.16

CONSULTANT DETAILS:
GHD
57 Graham Street Nowra NSW 2541
T 61 2 4424 4900 F 61 2 4424 4999
E noamail@ghd.com W www.ghd.com

CONSULTANT REFERENCE No. 23-1426651

Shoalhaven Water
A Group of Shoalhaven City Council

DESIGNED: CP	DATE: 02.2016	COMPANY: GHD	
DRAWN: KT	DATE: 02.2016	COMPANY: GHD	
CHECKED: DB	DATE: 10.2016	COMPANY: GHD	
APPROVED: CS	DATE: 11.2016	COMPANY: GHD	

TITLE:
SHOALHAVEN WATER
LYREBIRD PARK NOWRA SPS2 UPGRADE
ELECTRICAL SERVICES
INCOMING POWER SUPPLY
SCHEMATIC DIAGRAM

SIZE	SCALE	INDEX No.	DRAWING No.	SHEET	REV No.
A1	N.T.S.		23-24356	256	1

Plot Date: 15/04/21 - 20:20 Cad File: C:\CAD\temp\AcPublish_842032\23-24356-256.dwg

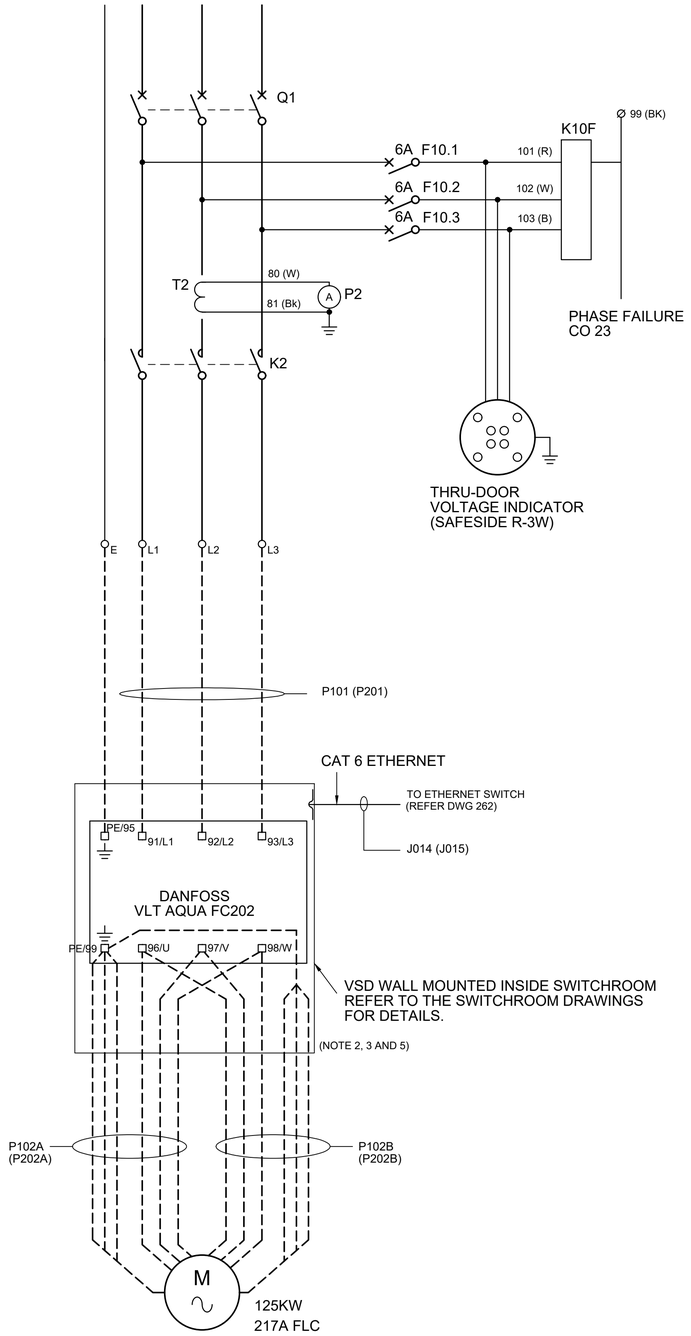

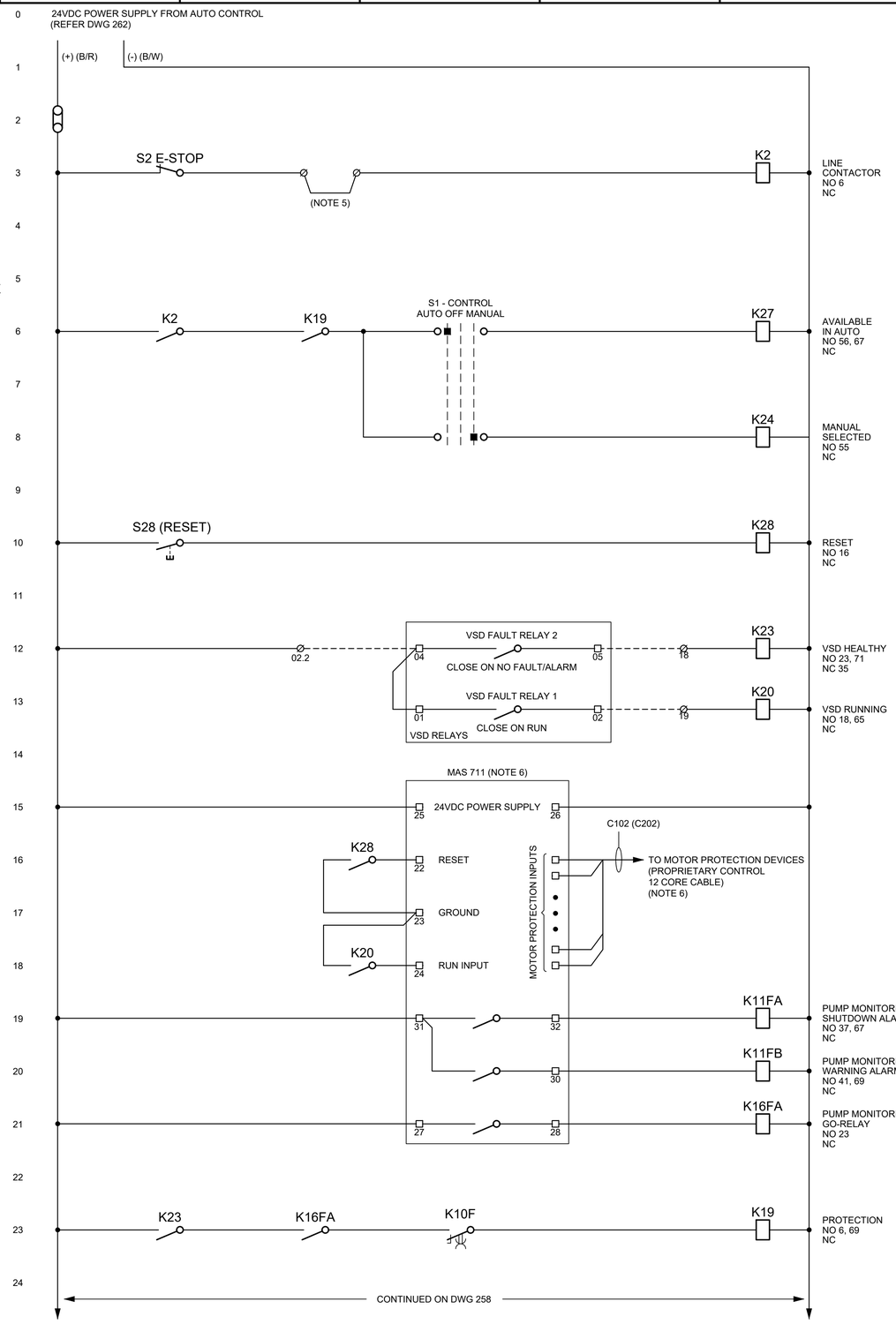

NOTES

1 REFER TO DWG 258 FOR GENERAL NOTES.

2 DANFOSS FC202 TO BE SUPPLIED WITH VLT ETHERNET/IP MCA 121 COMMUNICATIONS OPTION CARD AS WELL AS VLT 24VDC SUPPLY MCB 107 CONTROL POWER OPTION CARD.

3 DANFOSS FC202 C/W RFI FILTER/DC CHOKE AS STANDARD & BE A LOW HARMONIC VERSION.

4 CONTRACTOR SHALL ENSURE THE VSD DRIVE IS CONFIGURED/PROGRAMMED CORRECTLY BEFORE PUTTING DRIVE TO SERVICE.

5 BRIDGE TERMINALS WHERE FIELD EMERGENCY STOP IS NOT REQUIRED.

6 MOTOR PROTECTION INPUTS TO BE DETAILED ONCE PUMP PROTECTION REQUIREMENTS ARE DEFINED. THESE MAY INCLUDE THERMSTOR, BEARING, VIBRATION AND LEAKAGE PROTECTION FEATURES. CONTROL CORES WILL BE CONTAINED WITHIN THE PUMP/MOTORS PROPRIETARY, SCREENED CABLE.

7 THE VLTS SHALL BE ORDERED WITH DANFOSS PROPRIETARY BACK-CHANNEL COOLING KIT PART N° 176F3648.

8 FOR VLT WALL INSTALLATION AND BACK-CHANNEL COOLING DETAILS, REFER TO DWGS 280 & 281.

9 HEAT LOSSES FROM VLTS SHALL BE EXHAUSTED EXTERNALLY VIA BACK-CHANNEL COOLING. REFER TO DWG 282.

No.	REVISION DETAILS	DWN	DATE
1	REISSUED FOR TENDER	RK	16.04.21
0	ISSUED FOR CONSTRUCTION	VP	27.10.16

CONSULTANT DETAILS:
GHD
57 Graham Street Nowra NSW 2541
T 61 2 4424 4900 F 61 2 4424 4999
E noamail@ghd.com W www.ghd.com

CONSULTANT REFERENCE No.
23-1426651

Shoalhaven Water
A Group of Shoalhaven City Council

DESIGNED: CP	DATE: 02.2016	COMPANY: GHD	
DRAWN: KT	DATE: 02.2016	COMPANY: GHD	
CHECKED: DB	DATE: 10.2016	COMPANY: GHD	
APPROVED: CS	DATE: 11.2016	COMPANY: GHD	

TITLE:
SHOALHAVEN WATER
LYREBIRD PARK NOWRA SPS2 UPGRADE
ELECTRICAL SERVICES
MOTOR STARTER CIRCUIT DIAGRAM
SHEET 1 OF 3

SIZE	SCALE	INDEX No.	DRAWING No.	SHEET	REV No.
A1	N.T.S.		23-24356	257	1

Plot Date: 15/04/21 - 20:21 Cad File: C:\CAD\temp\AcPublish_842032\23-24356-257.dwg

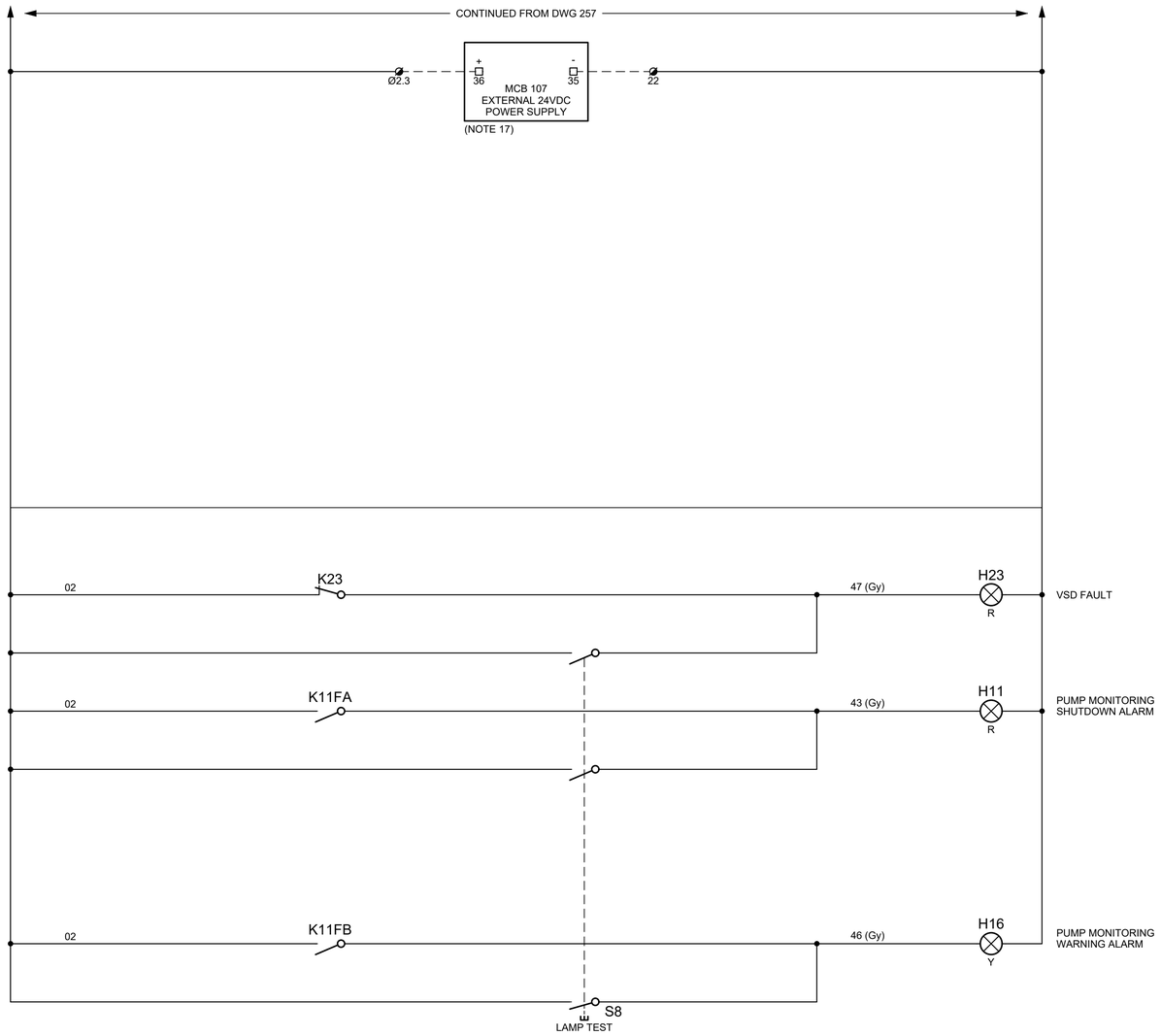

NOTES

1 REFER SINGLE LINE DIAGRAM FOR THE CONTINUATION OF WIRING.

2 EQUIPMENT TERMINALS NUMBERING SHALL COMPLY WITH IEC STANDARD 947.

3 ALL TERMINALS SHALL BE TAGGED AT EACH SIDE SUCH THAT THE TAG AGREES EITHER WITH THE NUMBER OF THE WIRE WHICH IS INSERTED IN THAT SIDE OF THE TERMINAL OR WITH THE CIRCUIT DIAGRAM.

4 SPARE NOTE

5 AN ENGRAVED, WHITE ON RED BACKGROUND, LABEL SHALL BE FITTED TO THE STARTER DOOR WHICH SHALL BEAR THE FOLLOWING INSCRIPTION :
"TO ISOLATE THE CONTROL CIRCUIT ONLY SWITCH OFF CONTROL CIRCUIT BREAKER Q3x". 'x' TO BE REPLACED WITH '8' FOR PUMP 1 AND '9' FOR PUMP 2.

6 FOR WIRE COLOURS REFER TO DRAWINGS.

7 THE PHASE FAILURE/REVERSAL RELAY SHALL HAVE A CHANGEOVER CONTACT WITH A TIME DELAY ON ENERGISE AND DE-ENERGISE AND SHALL MONITOR PHASE ASYMMETRY, SEQUENCE AND LOSS OF PHASE. THE RELAY SHALL BE SUITABLE FOR MOTOR APPLICATIONS. THE RELAY SHALL BE EQUAL TO CARLO GAVAZZI DPB-02-C-M48.

8 THE PLC INTERFACE RELAYS SHALL BE INDUSTRIAL TYPE PLUG-IN COMPLETE WITH 2 CHANGE-OVER CONTACTS, RATED 2A, 240V AC15 MINIMUM WITH PRESS TO TEST BUTTON AND FLAG INDICATION.

9 THE RESISTANCE AND CAPACITANCE VALUES OF THE RELAYS AND CONTACTOR SUPPRESSOR MODULES R-C (RESISTOR-CAPACITOR) SHALL BE DETERMINED IN ACCORDANCE WITH THE MANUFACTURER'S RECOMMENDATIONS.

10 THE DRIVE IS SHOWN FOR A DANFOSS FC202 VARIABLE SPEED DRIVE COMPLETE WITH DC BUS CHOKE AND RFI FILTER / WW HARMONIC OPTION

11 THE VSD SHALL HAVE A DEGREE OF MINIMUM PROTECTION OF IP54.

12 THE VSD SWITCHING FREQUENCY SHALL BE 2 kHz.

13 THE VARIABLE SPEED DRIVE SHALL COMPLY WITH THE REQUIREMENTS OF AS 2279 PARTS 2 AND 4 - DISTURBANCE IN MAINS SUPPLY NETWORKS.

14 THE VSD CHOKES SHALL BE DESIGNED TO LIMIT THE HARMONIC DISTORTION TO LEVELS PERMITTED BY THE SUPPLY AUTHORITY.

15 THE VARIABLE SPEED DRIVE SHALL HAVE ELECTROMAGNETIC COMPATIBILITY (EMC) FILTERS TO THE REQUIREMENTS OF AS 61800.3 CATEGORY C1.

16 ALL CONTROL WIRING SHALL BE CARRIED OUT IN ACCORDANCE WITH THE MANUFACTURER'S RECOMMENDATIONS.

17 THE MCB 107 CONTROL POWER OPTION CARD SHALL BE FITTED INSIDE THE FC202 VLT TO PROVIDE BACK-UP 24VDC SUPPLY FROM AN EXTERNAL SUPPLY SHOULD THE VLT NOT BE MAINS POWERED.

No.	REVISION DETAILS	DWN	DATE
1	REISSUED FOR TENDER	RK	16.04.21
0	ISSUED FOR CONSTRUCTION	VP	27.10.16

CONSULTANT DETAILS:
GHD
57 Graham Street Nowra NSW 2541
T 61 2 4424 4900 F 61 2 4424 4999
E noamail@ghd.com W www.ghd.com

CONSULTANT REFERENCE No. 23-1426651

Shoalhaven Water
A Group of Shoalhaven City Council

DESIGNED: CP	DATE: 02.2016	COMPANY: GHD	
DRAWN: KT	DATE: 02.2016	COMPANY: GHD	
CHECKED: DB	DATE: 10.2016	COMPANY: GHD	
APPROVED: CS	DATE: 11.2016	COMPANY: GHD	

TITLE:
SHOALHAVEN WATER
LYREBIRD PARK NOWRA SPS2 UPGRADE
ELECTRICAL SERVICES
MOTOR STARTER CIRCUIT DIAGRAM
SHEET 2 OF 3

SIZE	SCALE	INDEX No.	DRAWING No.	SHEET	REV No.
A1	N.T.S.		23-24356	258	1

Plot Date: 15/04/21 - 20:21 Cad File: C:\CAD\temp\AcPublish_842032\23-24356-258.dwg

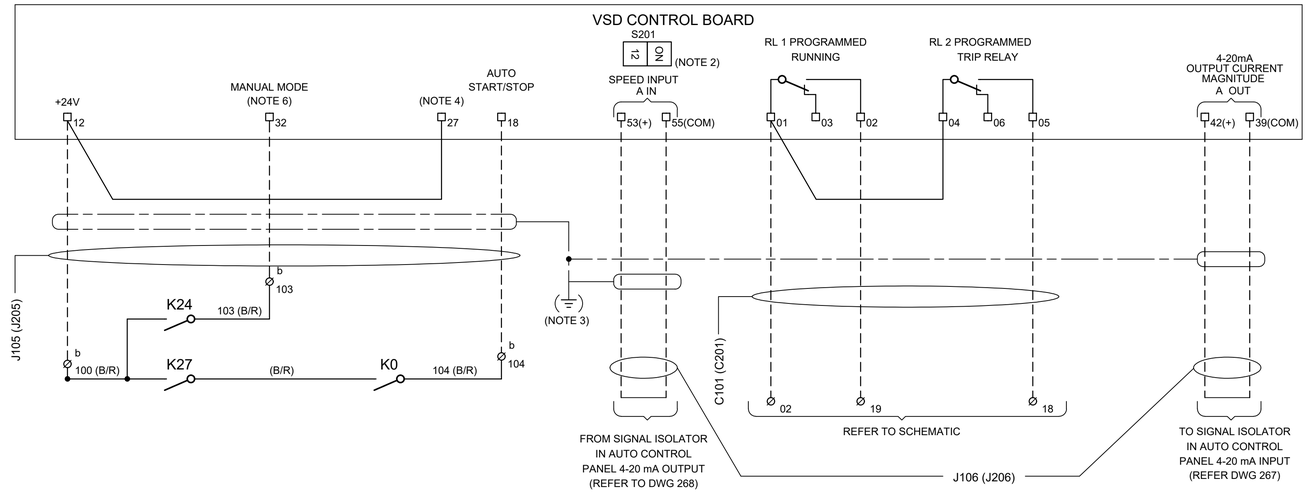

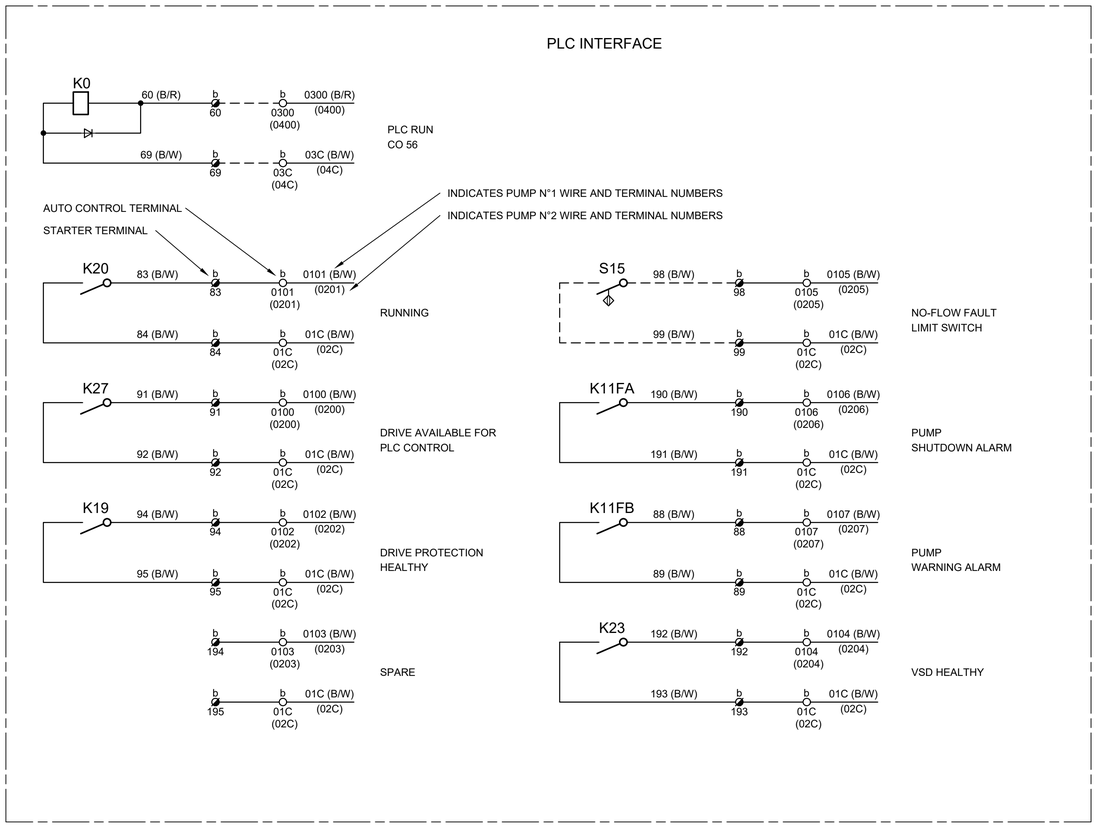

NOTES

1. REFER TO DWG 268 FOR GENERAL NOTES.
2. SWITCH S201 IS INTERNAL TO VSD AND SHOULD BE SET TO "ON" TO CONFIGURE THE SPEED REFERENCE INPUT AS A 4-20mA SIGNAL.
3. INSTRUMENT EARTH
4. A LINK MUST BE PROVIDED BETWEEN TERMINALS 12 AND 27 ON THE VSD CONTROL BOARD TO ALLOW DRIVE TO OPERATE. TERMINAL 27 DESIGNATED COAST INVERSE.
5. TERMNAL 18, 27, 32 ARE VSD DIGITAL INPUT SIGNALS.
6. WHEN CONTROL SWITCH S1 IS SELECTED TO "MANUAL", THE VSD SHALL BE PROGRAMMED TO SWITCH ACTIVE SETUPS TO ALLOW LOCAL START/STOP AND SPEED REFERENCE CONTROL. THE DRIVE PROTECTION RELAY K19 IS STILL FUNCTIONAL IN MANUAL CONTROL.

No.	REVISION DETAILS	DWN	DATE
1	REISSUED FOR TENDER	RK	16.04.21
0	ISSUED FOR CONSTRUCTION	VP	27.10.16

CONSULTANT DETAILS:
GHD
57 Graham Street Nowra NSW 2541
T 61 2 4424 4900 F 61 2 4424 4999
E noamail@ghd.com W www.ghd.com
CONSULTANT REFERENCE No.
23-1426651

Shoalhaven Water
A Group of Shoalhaven City Council

DESIGNED: CP	DATE: 02.2016	COMPANY: GHD	
DRAWN: KT	DATE: 02.2016	COMPANY: GHD	
CHECKED: DB	DATE: 10.2016	COMPANY: GHD	
APPROVED: CS	DATE: 11.2016	COMPANY: GHD	

TITLE:
SHOALHAVEN WATER
LYREBIRD PARK NOWRA SPS2 UPGRADE
ELECTRICAL SERVICES
MOTOR STARTER CIRCUIT DIAGRAM
SHEET 3 OF 3

SIZE	SCALE	INDEX No.	DRAWING No.	SHEET	REV No.
A1	N.T.S.		23-24356	259	1

Plot Date: 15/04/21 - 20:21 Cad File: C:\CAD\temp\AcPublish_842032\23-24356-259.dwg

SUPPLEMENTARY SYMBOLS

QXX 16A — 30 mA EARTH LEAKAGE CIRCUIT BREAKER

NOTES

1 THE 230 VOLT a.c / 24 VOLT d.c. POWER SUPPLIES SHALL HAVE THE FOLLOWING FEATURES:
- RUN TIME MONITORING FUNCTION.
- UNDERVOLTAGE ALARM OUTPUT
- VOLTAGE AND CURRENT DISPLAY
- PEAK CURRENT MEMORY
- OVERLOAD PROTECTION
- OVERVOLTAGE PROTECTION
- SHORT CIRCUIT PROTECTION
- 25% SPARE CAPACITY

THE DC POWER SUPPLIES UNDERVOLTAGE ALARM TRANSISTOR OUTPUT SHALL BE INTERFACED TO THE PLC. REFER TO THE DRAWINGS FOR DETAILS.

2 THE DC POWER SUPPLIES CAPACITORS SHALL BE SIZED TO ALLOW THE FUSES TO OPERATE (BLOW) BEFORE THE POWER SUPPLIES FOLD BACK PROTECTION OPERATES.

3 FINAL STATION OPERATING LEVEL TO BE SET ON SITE DURING COMMISSIONING.

4 FOR ADDITIONAL NOTES REFER TO SHEET 2.

5 REFER TO DWG 256 FOR PHASE FAILURE RELAY CONNECTIONS.

6 ALARM CONTACTS FOR E2, E21 AND E22 WIRED IN SERIES TO SINGLE PLC INPUT.

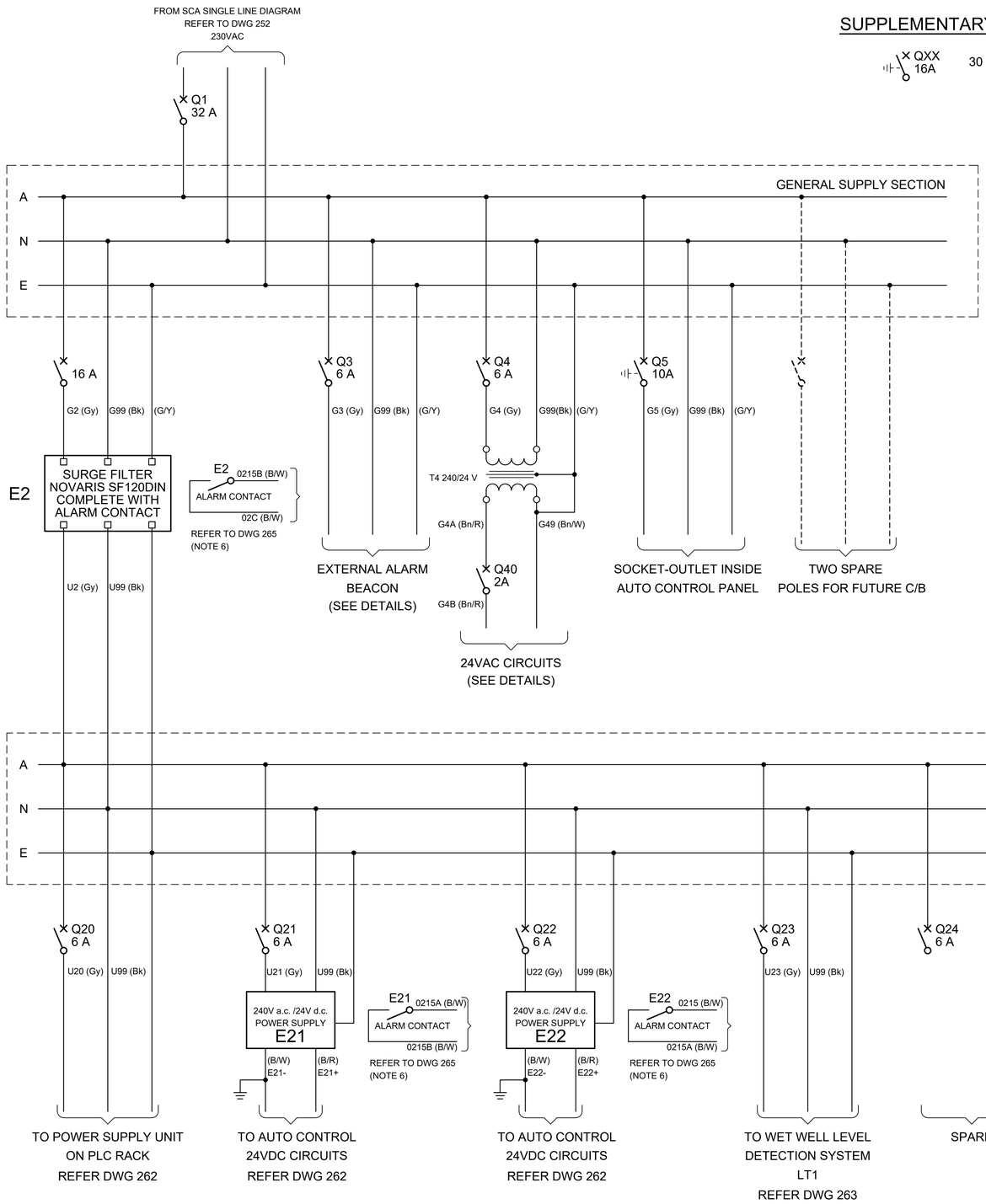

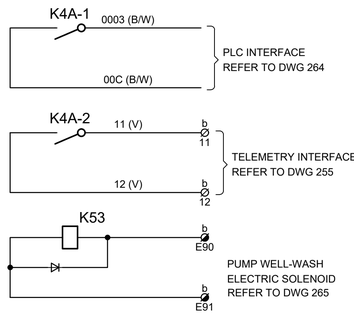

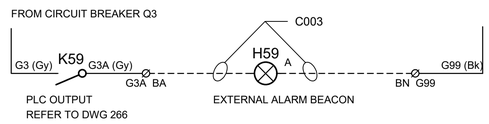

EXTERNAL ALARM BEACON

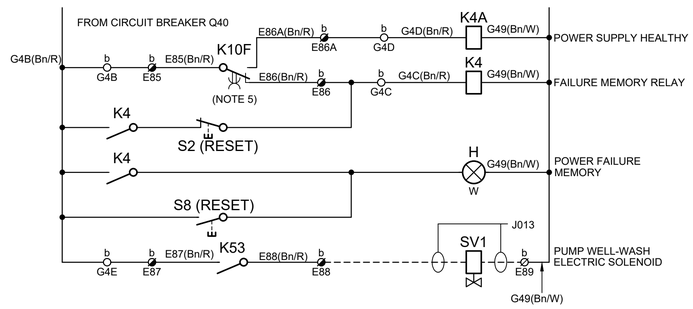

24 VAC CIRCUITS

No.	REVISION DETAILS	DWN	DATE
1	REISSUED FOR TENDER	RK	16.04.21
0	ISSUED FOR CONSTRUCTION	VP	27.10.16

CONSULTANT DETAILS:
GHD
57 Graham Street Nowra NSW 2541
T 61 2 4424 4900 F 61 2 4424 4999
E noamail@ghd.com W www.ghd.com

CONSULTANT REFERENCE No. 23-1426651

Shoalhaven Water
A Group of Shoalhaven City Council

DESIGNED: CP	DATE: 02.2016	COMPANY: GHD	
DRAWN: KT	DATE: 02.2016	COMPANY: GHD	
CHECKED: DB	DATE: 10.2016	COMPANY: GHD	
APPROVED: CS	DATE: 11.2016	COMPANY: GHD	

TITLE:
SHOALHAVEN WATER
LYREBIRD PARK NOWRA SPS2 UPGRADE
ELECTRICAL SERVICES
AUTO CONTROL DISTRIBUTION
SCHEMATIC DIAGRAM SHEET 1 OF 2

SIZE	SCALE	INDEX No.	DRAWING No.	SHEET	REV No.
A1	N.T.S.		23-24356	261	1

Plot Date: 15/04/21 - 20:21 Cad File: C:\CAD\temp\AcPublish_842032\23-24356-261.dwg

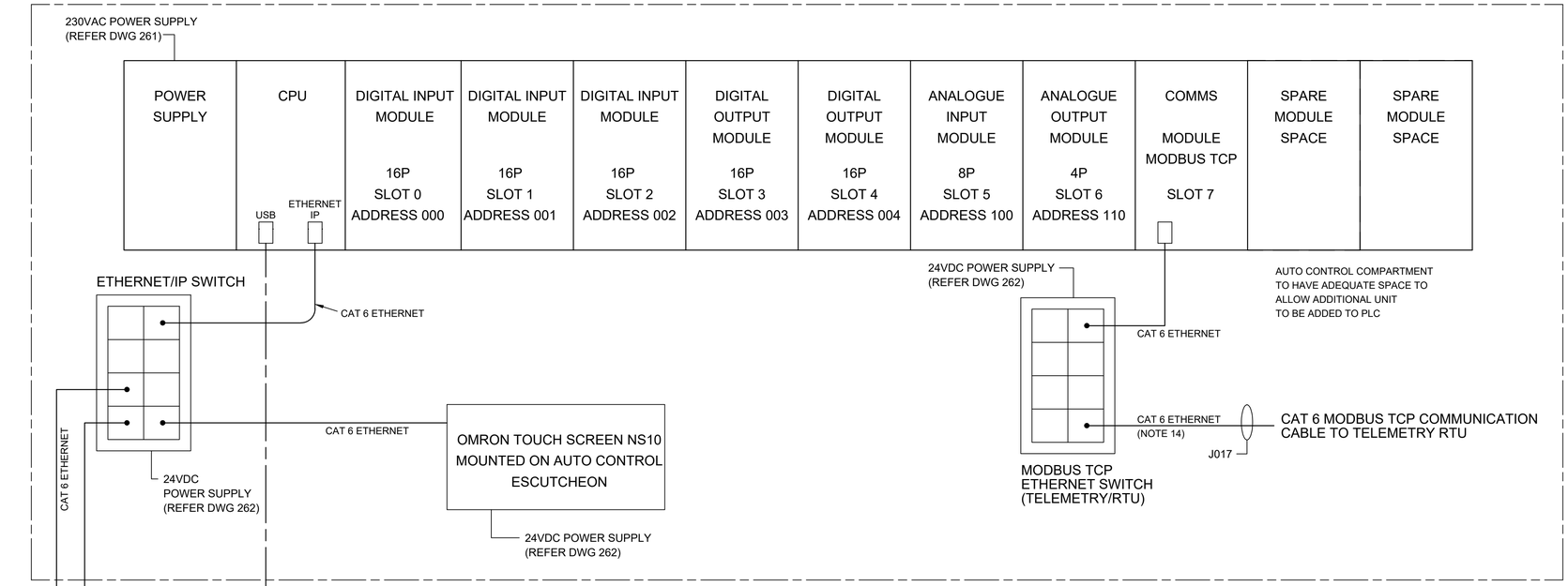

AUTO CONTROL PLC LAYOUT

LAPTOP COMPUTER TO VIEW AND MODIFY PLC PROGRAM
LAPTOP COMPUTER NOT PART OF CONTRACT

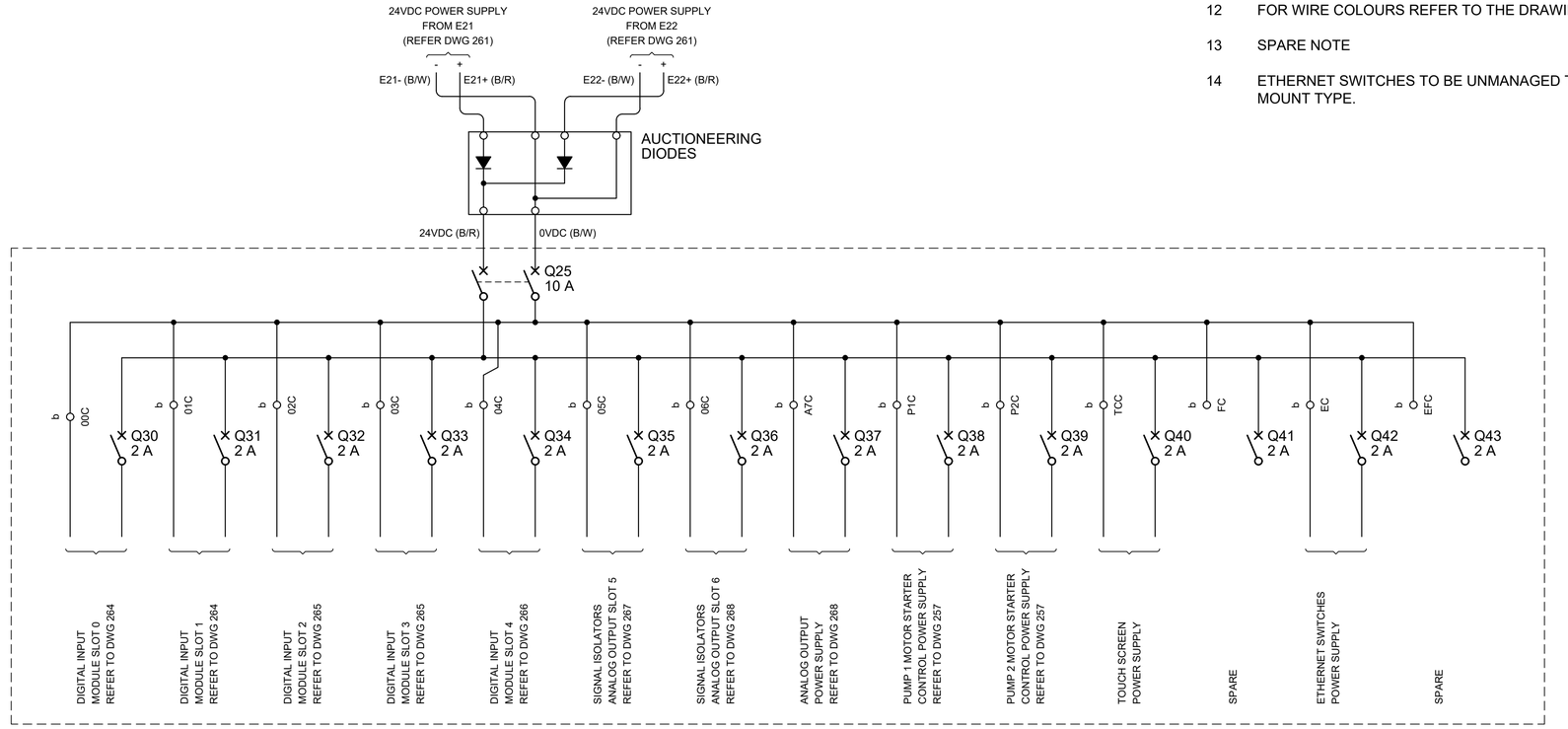

24 VOLT DC POWER SUPPLY DIAGRAM

NOTES

1. THE AUTO CONTROL SYSTEM HAS BEEN DESIGNED USING OMRON CJ2 EQUIPMENT. FOR EQUIPMENT DETAILS REFER TO THE SPECIFICATION.
2. THE DIGITAL OUTPUTS SHALL BE RELAY TYPE.
3. WHERE MORE THAN ONE POWER SUPPLY IS USED FOR THE INPUTS AND OUTPUTS THE INPUTS AND OUTPUTS SHALL BE SUPPLIED IN A LOGICAL MANNER.
4. THE TOUCH SCREEN, SIGNAL ISOLATORS AND ANALOGUE OUTPUT MODULE ARE SUPPLIED FROM THE I/O POWER SUPPLY. WHERE NOISE IS A PROBLEM SEPARATE POWER SUPPLIES SHALL BE USED.
5. THE CIRCUIT BREAKERS AND EQUIPMENT RATINGS INDICATED ARE INDICATIVE ONLY. THE ACTUAL RATINGS SHALL SUIT THE SYSTEM.
6. EQUIPMENT TERMINAL NUMBERING SHALL COMPLY WITH IEC STANDARD 947.
7. ALL WIRES SHALL BE FITTED WITH CABLE MARKERS, WHERE THE WIRE NUMBER IS NOT INDICATED THE WIRE NUMBER SHALL AGREE WITH THE TERMINAL NUMBER OF THE TERMINAL OF WHICH THE WIRE IS INSERTED.
8. THE PLC & TELEMETRY INTERFACE RELAYS SHALL BE INDUSTRIAL TYPE PLUG-IN COMPLETE WITH TWO CHANGE-OVER CONTACTS, RATED 2A, 230V AC15 MINIMUM WITH PRESS TO TEST AND FLAG INDICATION.
9. SUPPLY AND INSTALL ALL TERMINALS NECESSARY FOR TERMINATION OF ALL FIELD AND SCA INTERCONNECTING WIRING, INCLUDING SPARE CABLE CORES.
10. ALL EXTRA-LOW VOLTAGE TERMINALS, INCLUDING FUSE TERMINALS, SHALL BE BLUE IN COLOUR.
11. SUPPLY AND INSTALL CABLING BETWEEN THE SCA AND THE TELEMETRY RTU TERMINALS.
12. FOR WIRE COLOURS REFER TO THE DRAWINGS.
13. SPARE NOTE
14. ETHERNET SWITCHES TO BE UNMANAGED TYPE 24VDC DIN RAIL MOUNT TYPE.

No.	REVISION DETAILS	DWN	DATE
1	REISSUED FOR TENDER	RK	16.04.21
0	ISSUED FOR CONSTRUCTION	VP	27.10.16

CONSULTANT DETAILS:
GHD
57 Graham Street Nowra NSW 2541
T 61 2 4424 4900 F 61 2 4424 4999
E noamail@ghd.com W www.ghd.com

CONSULTANT REFERENCE No. 23-1426651

Shoalhaven Water
A Group of Shoalhaven City Council

DESIGNED: CP	DATE: 02.2016	COMPANY: GHD	
DRAWN: KT	DATE: 02.2016	COMPANY: GHD	
CHECKED: DB	DATE: 10.2016	COMPANY: GHD	
APPROVED: CS	DATE: 11.2016	COMPANY: GHD	

TITLE:
SHOALHAVEN WATER
LYREBIRD PARK NOWRA SPS2 UPGRADE
ELECTRICAL SERVICES
AUTO CONTROL DISTRIBUTION
SCHEMATIC DIAGRAM SHEET 2 OF 2

SIZE	SCALE	INDEX No.	DRAWING No.	SHEET	REV No.
A1	N.T.S.		23-24356	262	1

Plot Date: 15/04/21 - 20:22 Cad File: C:\CAD\temp\AcPublish_842032\23-24356-262.dwg

NOTES

1. ALL EQUIPMENT ARE DRAWN FOR PROPRIETARY TYPE UNITS. AMEND THE DRAWINGS TO SUIT THE ACTUAL EQUIPMENT TENDERED.
2. ALL EQUIPMENT SHALL BE INSTALLED TO THE MANUFACTURER'S RECOMMENDATIONS.
3. ALL EXTRA LOW VOLTAGE TERMINALS SHALL BE BLUE IN COLOUR.
4. SUPPLY AND INSTALL ALL TERMINALS NECESSARY FOR TERMINATION OF ALL FIELD CABLES, INCLUDING SPARE CORES.
5. WIRE TERMINAL AND EQUIPMENT DESIGNATIONS INDICATED ON THE DRAWING ARE INDICATIVE ONLY AND MAY BE AMENDED TO SUIT THE EQUIPMENT AND SYSTEM LAYOUT.
6. TERMINATE THE EARTH TERMINAL OF THE SURGE PROTECTION DEVICE TO THE MAIN EARTH.
7. INSTRUMENTATION EARTH SCREENS TO BE EARTHED AT THE AUTO CONTROL END ONLY AND ISOLATED FROM EARTH AT THE INSTRUMENT.

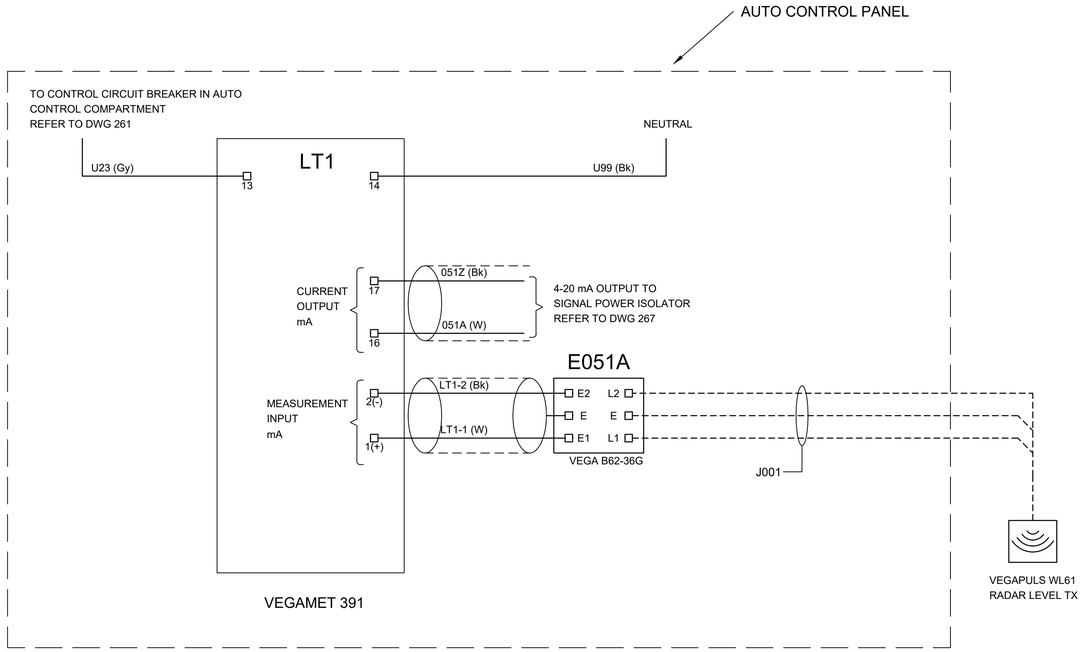

PUMPING STATION WET WELL LEVEL MONITORING SYSTEM LT1

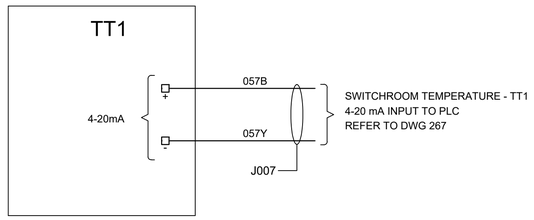

SWITCHROOM TEMPERATURE MONITORING TT1

No.	REVISION DETAILS	DWN	DATE
1	REISSUED FOR TENDER	RK	16.04.21
0	ISSUED FOR CONSTRUCTION	VP	27.10.16

CONSULTANT DETAILS:
GHD
57 Graham Street Nowra NSW 2541
T 61 2 4424 4900 F 61 2 4424 4999
E noamail@ghd.com W www.ghd.com

CONSULTANT REFERENCE No. 23-1426651

Shoalhaven Water
A Group of Shoalhaven City Council

DESIGNED: CP	DATE: 02.2016	COMPANY: GHD	
DRAWN: KT	DATE: 02.2016	COMPANY: GHD	
CHECKED: DB	DATE: 10.2016	COMPANY: GHD	
APPROVED: CS	DATE: 11.2016	COMPANY: GHD	

TITLE:
SHOALHAVEN WATER
LYREBIRD PARK NOWRA SPS2 UPGRADE
ELECTRICAL SERVICES
INSTRUMENTATION LOOPS

SIZE	SCALE	INDEX No.	DRAWING No.	SHEET	REV No.
A1	N.T.S.		23-24356	263	1

Plot Date: 15/04/21 - 20:22 Cad File: C:\CAD\temp\AcPublish_842032\23-24356-263.dwg

NOTES

1 PLC I/O WIRING SHALL BE CARRIED OUT USING 0.75 mm² PVC FLEXIBLE CABLES. WIRE COLOURS ARE AS INDICATED.

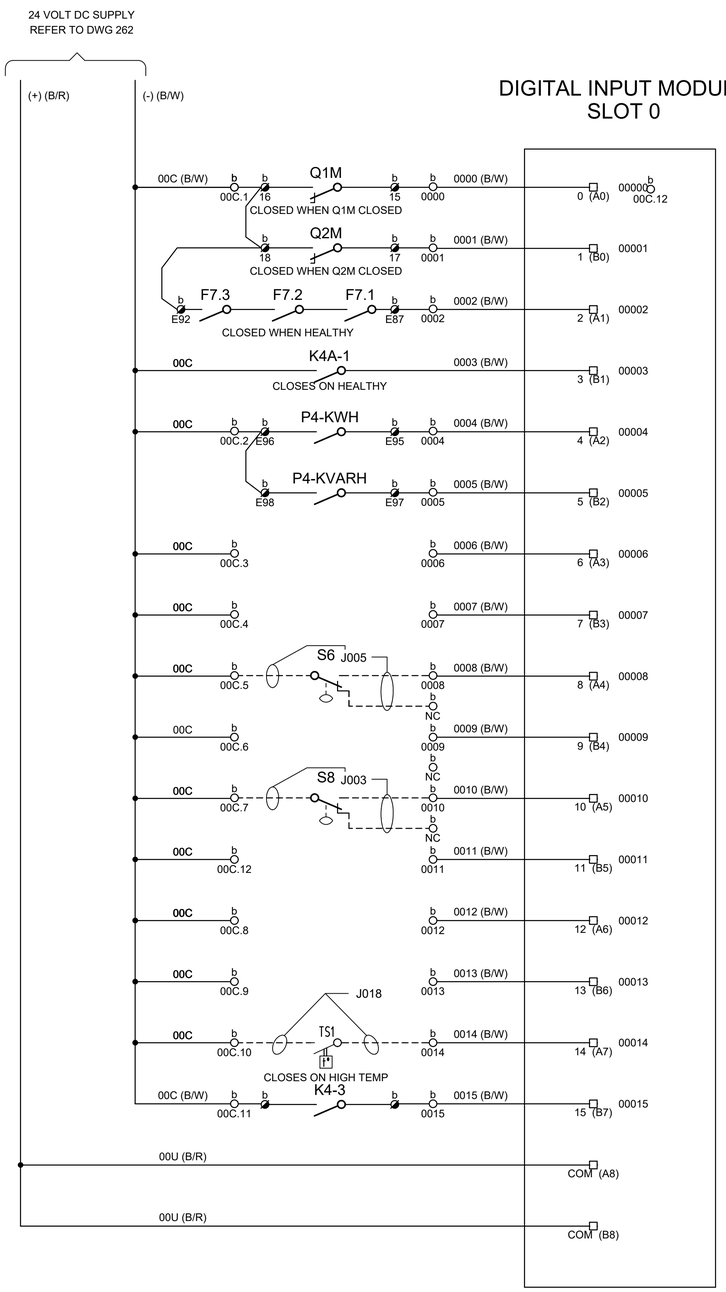

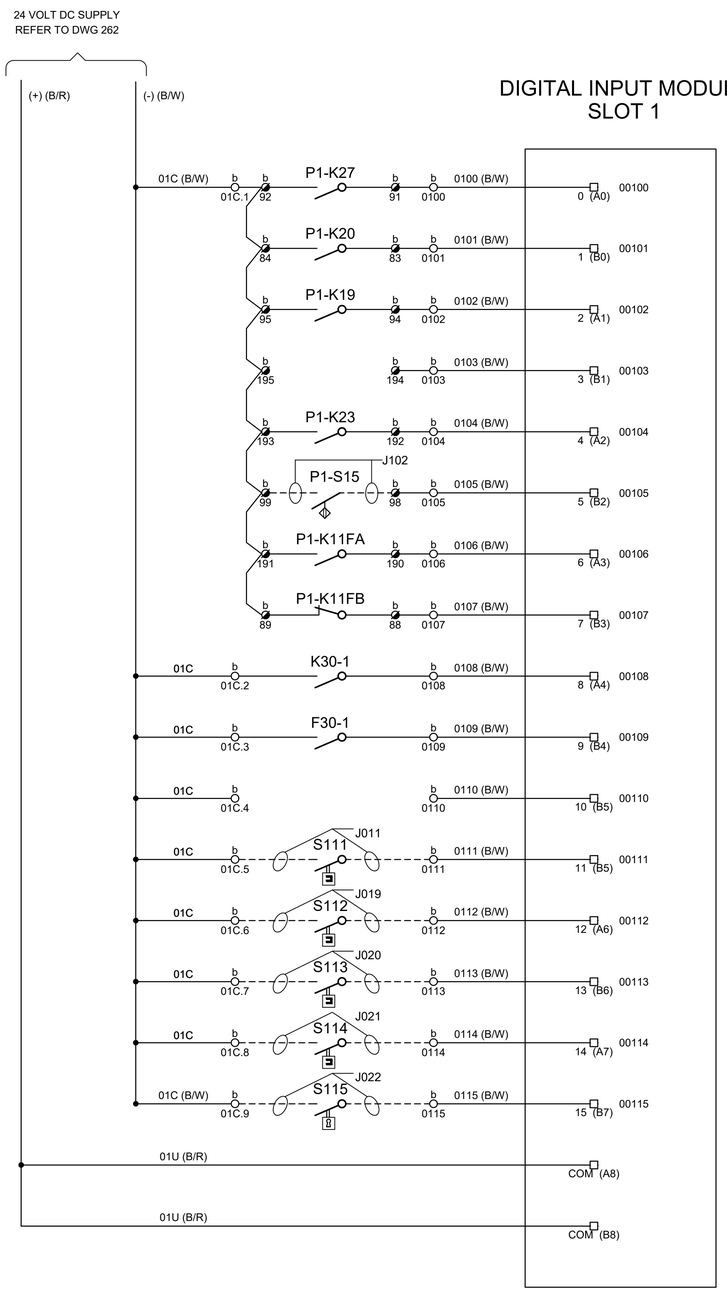

No.	REVISION DETAILS	DWN	DATE
1	REISSUED FOR TENDER	RK	16.04.21
0	ISSUED FOR CONSTRUCTION	VP	27.10.16

CONSULTANT DETAILS:
GHD
57 Graham Street Nowra NSW 2541
T 61 2 4424 4900 F 61 2 4424 4999
E noamail@ghd.com W www.ghd.com

CONSULTANT REFERENCE No.
23-1426651

Shoalhaven Water
A Group of Shoalhaven City Council

DESIGNED: CP	DATE: 02.2016	COMPANY: GHD	
DRAWN: KT	DATE: 02.2016	COMPANY: GHD	
CHECKED: DB	DATE: 10.2016	COMPANY: GHD	
APPROVED: CS	DATE: 11.2016	COMPANY: GHD	

TITLE:
SHOALHAVEN WATER
LYREBIRD PARK NOWRA SPS2 UPGRADE
ELECTRICAL SERVICES
AUTO CONTROL I/O MODULE
SCHEMATIC DIAGRAM SHEET 1 OF 5

SIZE:	SCALE:	INDEX No.	DRAWING No.	SHEET	REV No.
A1	N.T.S.		23-24356	264	1

Plot Date: 15/04/21 - 20:22 Cad File: C:\CAD\temp\AcPublish_842032\23-24356-264.dwg

NOTES

1 PLC I/O WIRING SHALL BE CARRIED OUT USING 0.75 mm² PVC FLEXIBLE CABLES. WIRE COLOURS ARE AS INDICATED.

DIGITAL INPUT MODULE SLOT 2

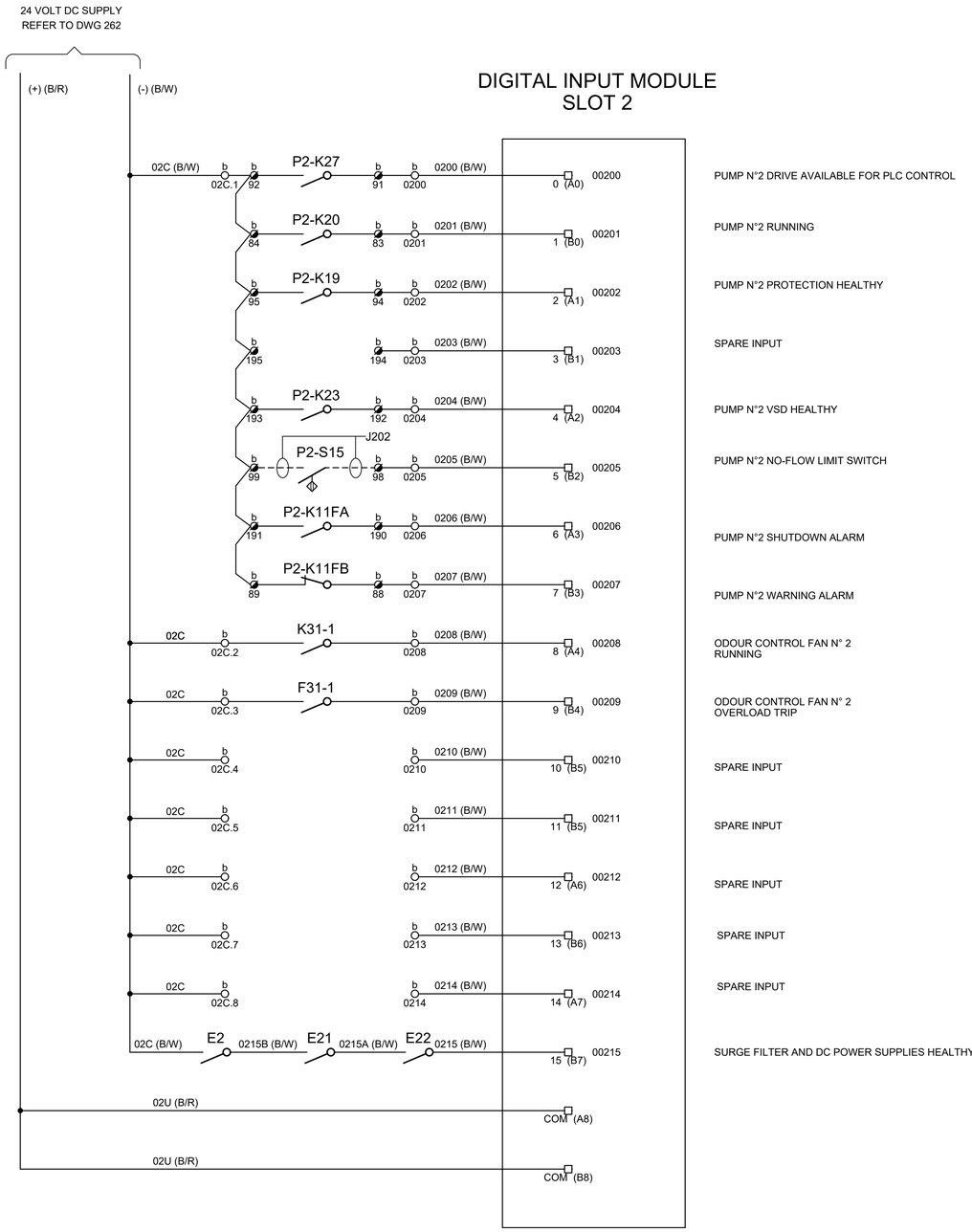

DIGITAL OUTPUT MODULE SLOT 3

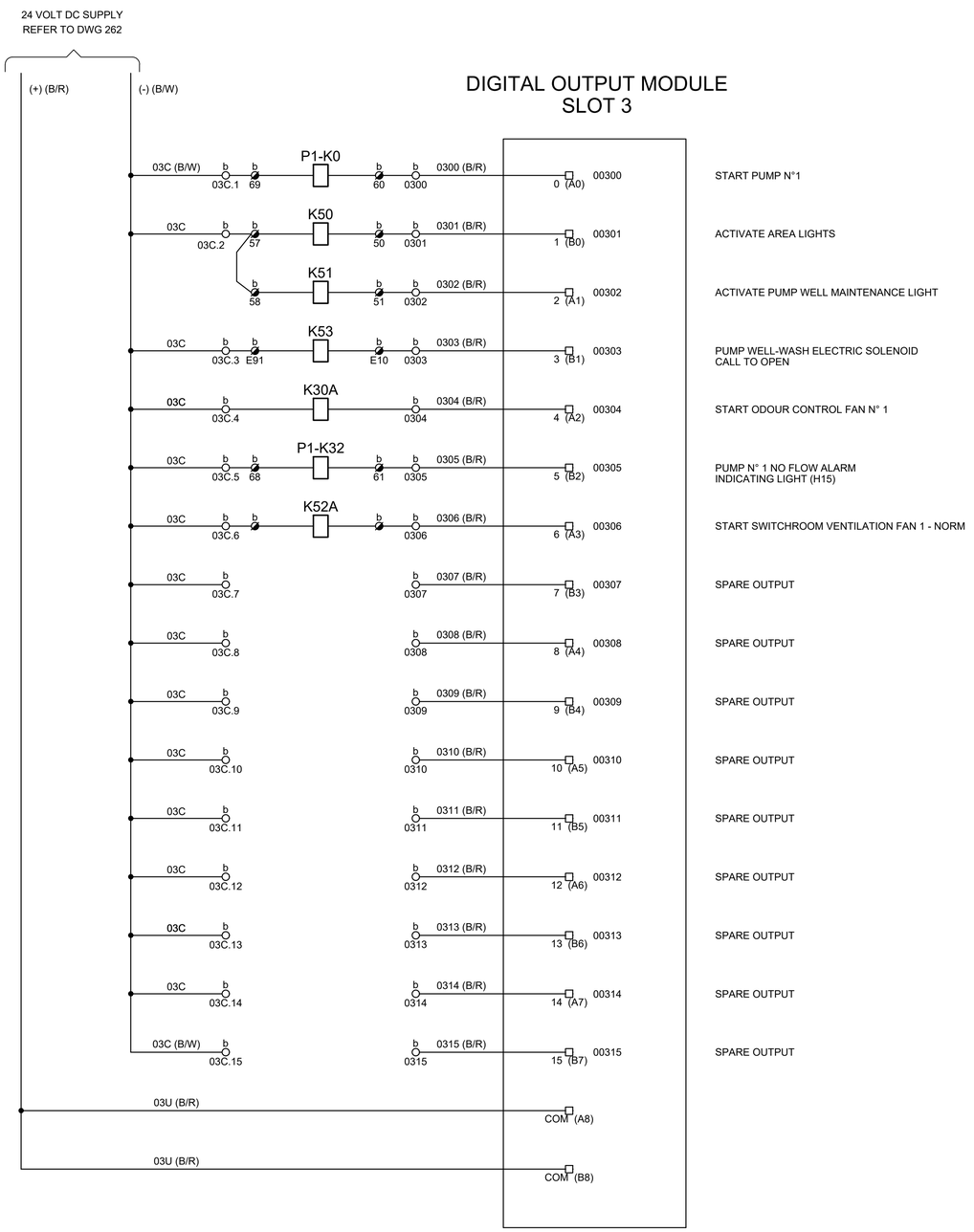

No.	REVISION DETAILS	DWN	DATE
1	REISSUED FOR TENDER	RK	16.04.21
0	ISSUED FOR CONSTRUCTION	VP	27.10.16

CONSULTANT DETAILS:
GHD
57 Graham Street Nowra NSW 2541
T 61 2 4424 4900 F 61 2 4424 4999
E noamail@ghd.com W www.ghd.com

CONSULTANT REFERENCE No. 23-1426651

Shoalhaven Water
A Group of Shoalhaven City Council

DESIGNED: CP	DATE: 02.2016	COMPANY: GHD	
DRAWN: KT	DATE: 02.2016	COMPANY: GHD	
CHECKED: DB	DATE: 10.2016	COMPANY: GHD	
APPROVED: CS	DATE: 11.2016	COMPANY: GHD	

TITLE:
SHOALHAVEN WATER
LYREBIRD PARK NOWRA SPS2 UPGRADE
ELECTRICAL SERVICES
AUTO CONTROL I/O MODULE
SCHEMATIC DIAGRAM SHEET 2 OF 5

SIZE	SCALE	INDEX No.	DRAWING No.	SHEET	REV No.
A1	N.T.S.		23-24356	265	1

Plot Date: 15/04/21 - 20:23 Cad File: C:\CAD\temp\AcPublish_842032\23-24356-265.dwg

NOTES

1 PLC I/O WIRING SHALL BE CARRIED OUT USING 0.75 mm² PVC FLEXIBLE CABLES. WIRE COLOURS ARE AS INDICATED.

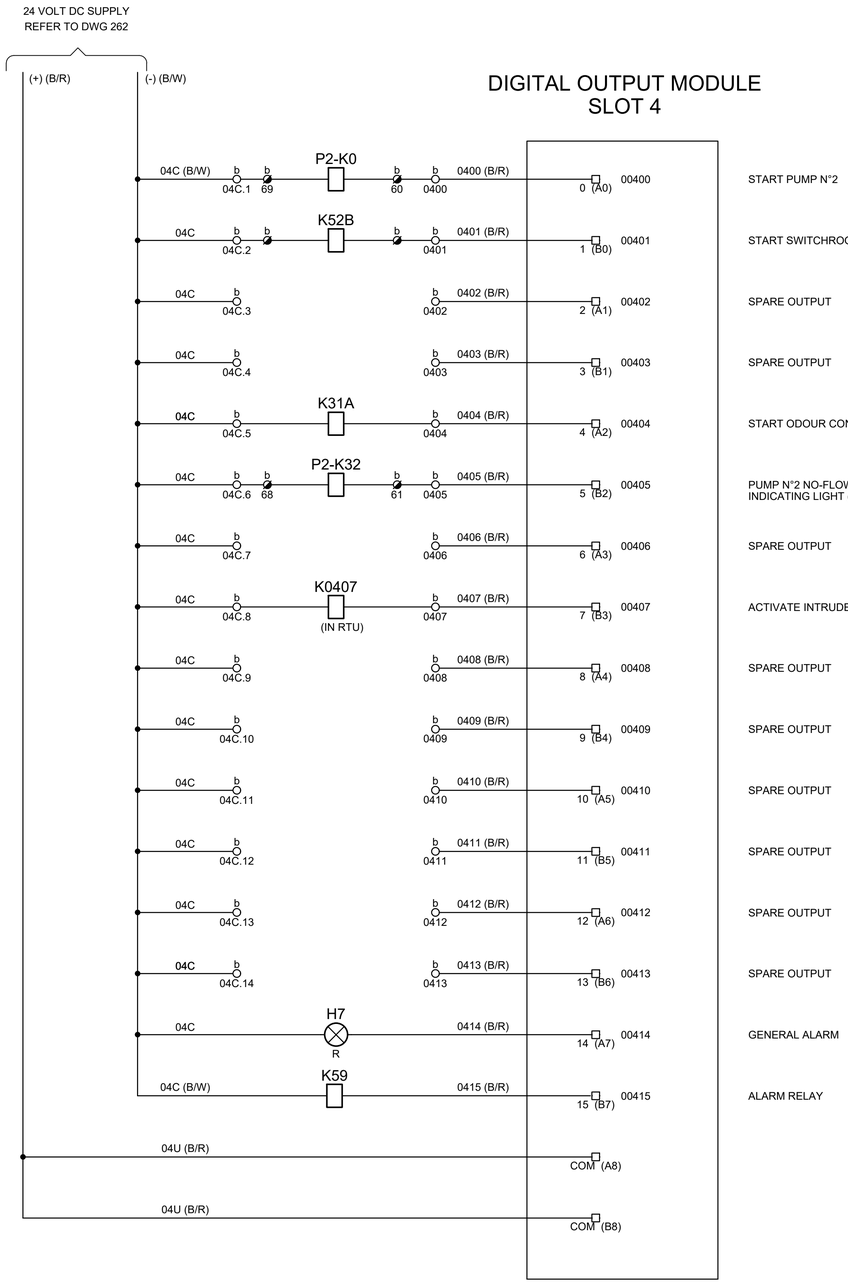

No.	REVISION DETAILS	DWN	DATE
1	REISSUED FOR TENDER	RK	16.04.21
0	ISSUED FOR CONSTRUCTION	VP	27.10.16

CONSULTANT DETAILS:
GHD
57 Graham Street Nowra NSW 2541
T 61 2 4424 4900 F 61 2 4424 4999
E noamail@ghd.com W www.ghd.com

CONSULTANT REFERENCE No. 23-1426651

Shoalhaven Water
A Group of Shoalhaven City Council

DESIGNED: CP	DATE: 02.2016	COMPANY: GHD	
DRAWN: KT	DATE: 02.2016	COMPANY: GHD	
CHECKED: DB	DATE: 10.2016	COMPANY: GHD	
APPROVED: CS	DATE: 11.2016	COMPANY: GHD	

TITLE:
SHOALHAVEN WATER
LYREBIRD PARK NOWRA SPS2 UPGRADE
ELECTRICAL SERVICES
AUTO CONTROL I/O MODULE
SCHEMATIC DIAGRAM SHEET 3 OF 5

SIZE	SCALE	INDEX No.	DRAWING No.	SHEET	REV No.
A1	N.T.S.		23-24356	266	1

Plot Date: 15/04/21 - 20:23 Cad File: C:\CAD\temp\AcPublish_842032\23-24356-266.dwg

ANALOGUE INPUT MODULE
SLOT 5

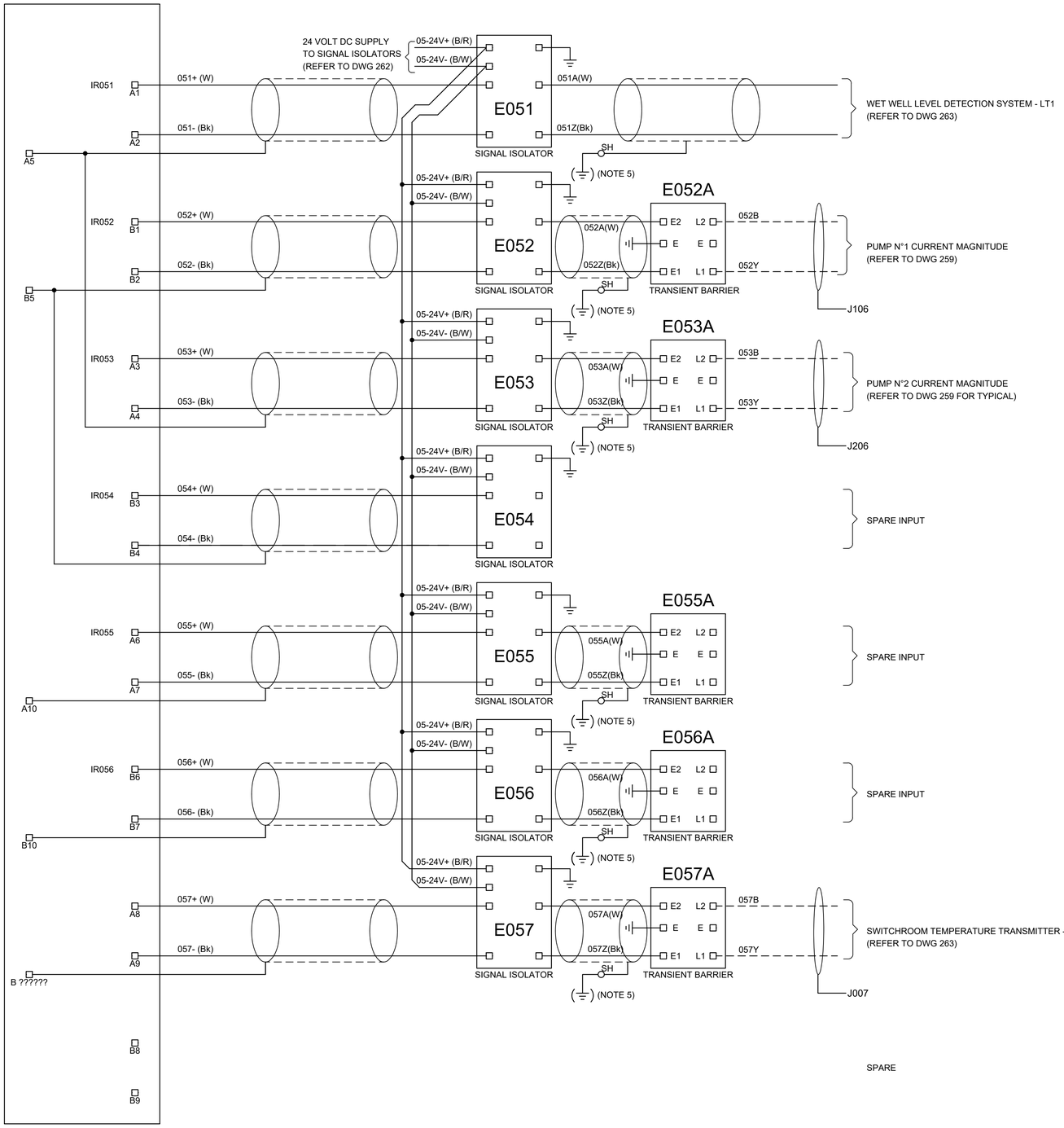

NOTES

1 THE ISOLATORS SHALL PROVIDE GALVANIC ISOLATION TO THE ANALOGUE INPUTS TO THE PLC AND HAVE A INPUT/OUTPUT ISOLATION OF 2 kV RMS CONTINUOUS OR BETTER. THE ISOLATORS SHALL HAVE A LED TO PROVIDE INDICATION OF THE MODULE FUNCTION, SIGNAL PRESENCE AND LOOP CONDITION FOR CURRENT OUTPUT.

2 THE SPARE INPUTS SHALL WIRED TO TERMINALS. TERMINAL NUMBERS TO MATCH WIRE NUMBERS.

3 THE AUTO CONTROL COMPARTMENT SHALL HAVE PROVISION FOR THE FUTURE INSTALLATION OF SIGNAL ISOLATORS AND TRANSIENT BARRIERS FOR EACH SPARE ANALOGUE INPUT.

4 TERMINATE THE EARTH TERMINAL OF THE SURGE PROTECTION DEVICE TO THE MAIN EARTH.

5 (⏚) SIGNIFIES INSTRUMENT EARTH AND MUST BE ELECTRICALLY ISOLATED FROM GENERAL (DIRTY) EARTH. INSTRUMENT EARTH TO BE TIED BACK TO 24VDC POWER NEGATIVE.

No.	REVISION DETAILS	DWN	DATE
1	REISSUED FOR TENDER	RK	16.04.21
0	ISSUED FOR CONSTRUCTION	VP	27.10.16

CONSULTANT DETAILS:
GHD
57 Graham Street Nowra NSW 2541
T 61 2 4424 4900 F 61 2 4424 4999
E noamail@ghd.com W www.ghd.com

CONSULTANT REFERENCE No. 23-1426651

Shoalhaven Water
A Group of Shoalhaven City Council

DESIGNED: CP	DATE: 02.2016	COMPANY: GHD	
DRAWN: KT	DATE: 02.2016	COMPANY: GHD	
CHECKED: DB	DATE: 10.2016	COMPANY: GHD	
APPROVED: CS	DATE: 11.2016	COMPANY: GHD	

TITLE:
SHOALHAVEN WATER
LYREBIRD PARK NOWRA SPS2 UPGRADE
ELECTRICAL SERVICES
AUTO CONTROL I/O MODULE
SCHEMATIC DIAGRAM SHEET 4 OF 5

SIZE	SCALE	INDEX No.	DRAWING No.	SHEET	REV No.
A1	N.T.S.		23-24356	267	1

Plot Date: 15/04/21 - 20:23 Cad File: C:\CAD\temp\AcPublish_842032\23-24356-267.dwg

ANALOGUE OUTPUT MODULE
SLOT 6

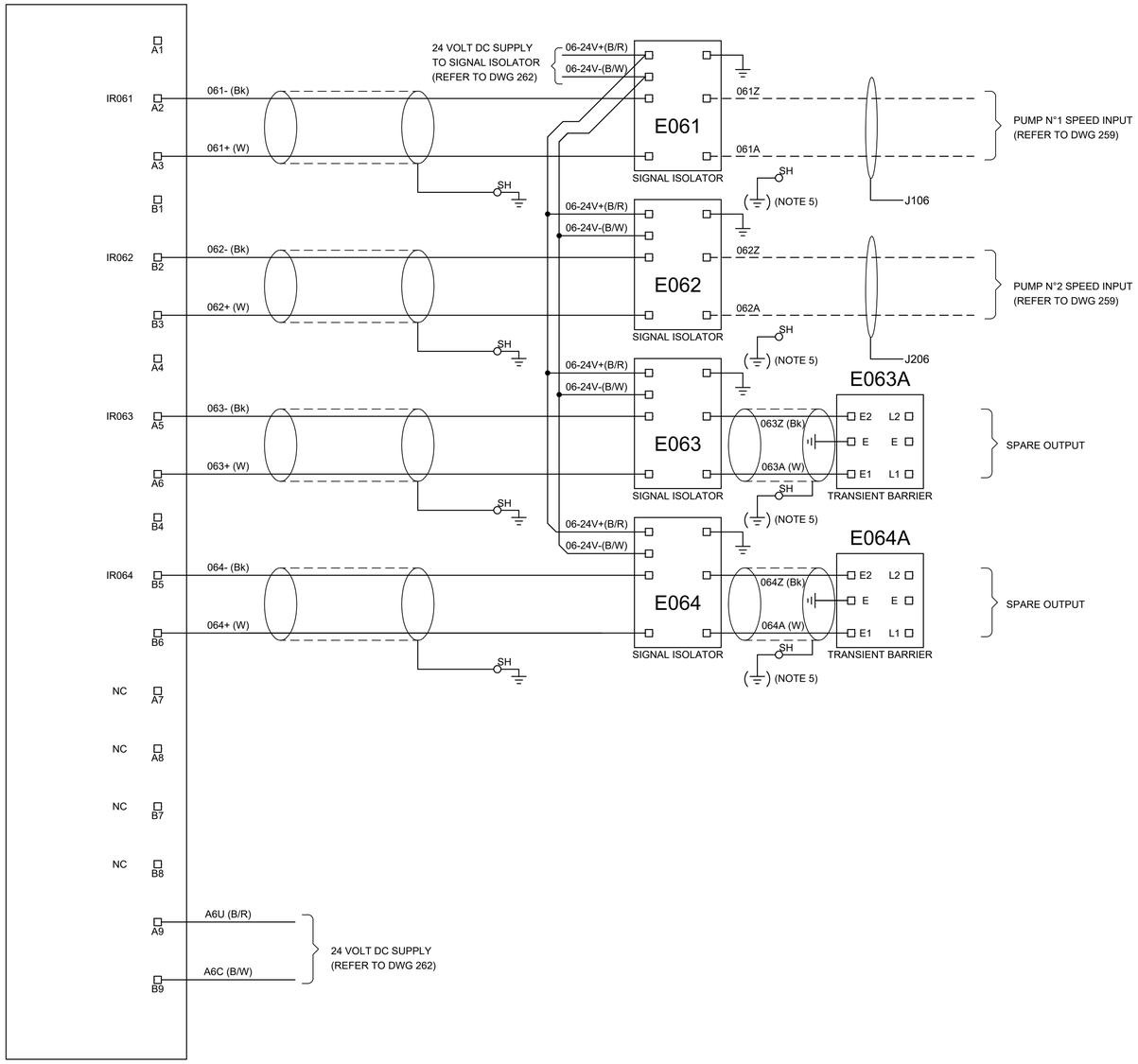

NOTES

1. THE ISOLATORS SHALL PROVIDE GALVANIC ISOLATION TO THE ANALOGUE OUTPUTS TO THE PLC AND HAVE A INPUT/OUTPUT ISOLATION OF 2 kV RMS CONTINUOUS OR BETTER. THE ISOLATORS SHALL HAVE A LED TO PROVIDE INDICATION OF THE MODULE FUNCTION, SIGNAL PRESENCE AND LOOP CONDITION FOR CURRENT OUTPUT.
2. THE SPARE OUTPUTS SHALL WIRED TO TERMINALS. TERMINAL NUMBERS TO MATCH WIRE NUMBERS.
3. THE AUTO CONTROL COMPARTMENT SHALL HAVE PROVISION FOR THE FUTURE INSTALLATION OF SIGNAL ISOLATORS AND TRANSIENT BARRIERS FOR EACH SPARE ANALOGUE OUTPUT.
4. TERMINATE THE EARTH TERMINAL OF THE SURGE PROTECTION DEVICE TO THE MAIN EARTH.
5. (⏚) SIGNIFIES INSTRUMENT EARTH AND MUST BE ELECTRICALLY ISOLATED FROM GENERAL (DIRTY) EARTH. INSTRUMENT EARTH TO BE TIED BACK TO 24VDC POWER NEGATIVE.

No.	REVISION DETAILS	DWN	DATE
1	REISSUED FOR TENDER	RK	16.04.21
0	ISSUED FOR CONSTRUCTION	VP	27.10.16

CONSULTANT DETAILS:
GHD
57 Graham Street Nowra NSW 2541
T 61 2 4424 4900 F 61 2 4424 4999
E noamail@ghd.com W www.ghd.com

CONSULTANT REFERENCE No. 23-1426651

Shoalhaven Water
A Group of Shoalhaven City Council

DESIGNED: CP	DATE: 02.2016	COMPANY: GHD	
DRAWN: KT	DATE: 02.2016	COMPANY: GHD	
CHECKED: DB	DATE: 10.2016	COMPANY: GHD	
APPROVED: CS	DATE: 11.2016	COMPANY: GHD	

TITLE:
SHOALHAVEN WATER
LYREBIRD PARK NOWRA SPS2 UPGRADE
ELECTRICAL SERVICES
AUTO CONTROL I/O MODULE
SCHEMATIC DIAGRAM SHEET 5 OF 5

SIZE	SCALE	INDEX No.	DRAWING No.	SHEET	REV No.
A1	N.T.S.		23-24356	268	1

Plot Date: 15/04/21 - 20:23 Cad File: C:\CAD\temp\AcPublish_842032\23-24356-268.dwg

NOTES

1. THE DIMENSIONS AND RATING SHOWN ARE INDICATIVE ONLY. THE DIMENSIONS AND RATING TO SUIT THE INDIVIDUAL STATIONS.
2. ENCLOSURE TO BE MANUFACTURED OUT OF 316 STAINLESS STEEL AND HAVE A DEGREE OF PROTECTION OF IP66.
3. PADBOLTS TO BE SUITABLE FOR COUNCIL'S PADLOCKS.
4. APERTURE CUT-OUT DIMENSIONS INDICATIVE. CONTRACTOR TO SIZE ADEQUATELY. APERTURE PERIMETER SHALL HAVE PROTECTIVE STRIP PLACED ALONG SHARP EDGES OF GEAR PLATE TO PROTECT CABLES FROM DAMAGE.
5. ALLOW ADEQUATE PROTRUDING CONDUIT LENGTH TO PASS THROUGH AND INTO ENCLOSURE. CIRCUMFERENCE SHALL BE SEALED TO PROTECT AGAINST MOISTURE/DUST INGRESS INTO ENCLOSURE.
6. TERMINAL SHALL BE COVERED BY FULL PLASTIC (CLEAR) SHROUD/COVER.

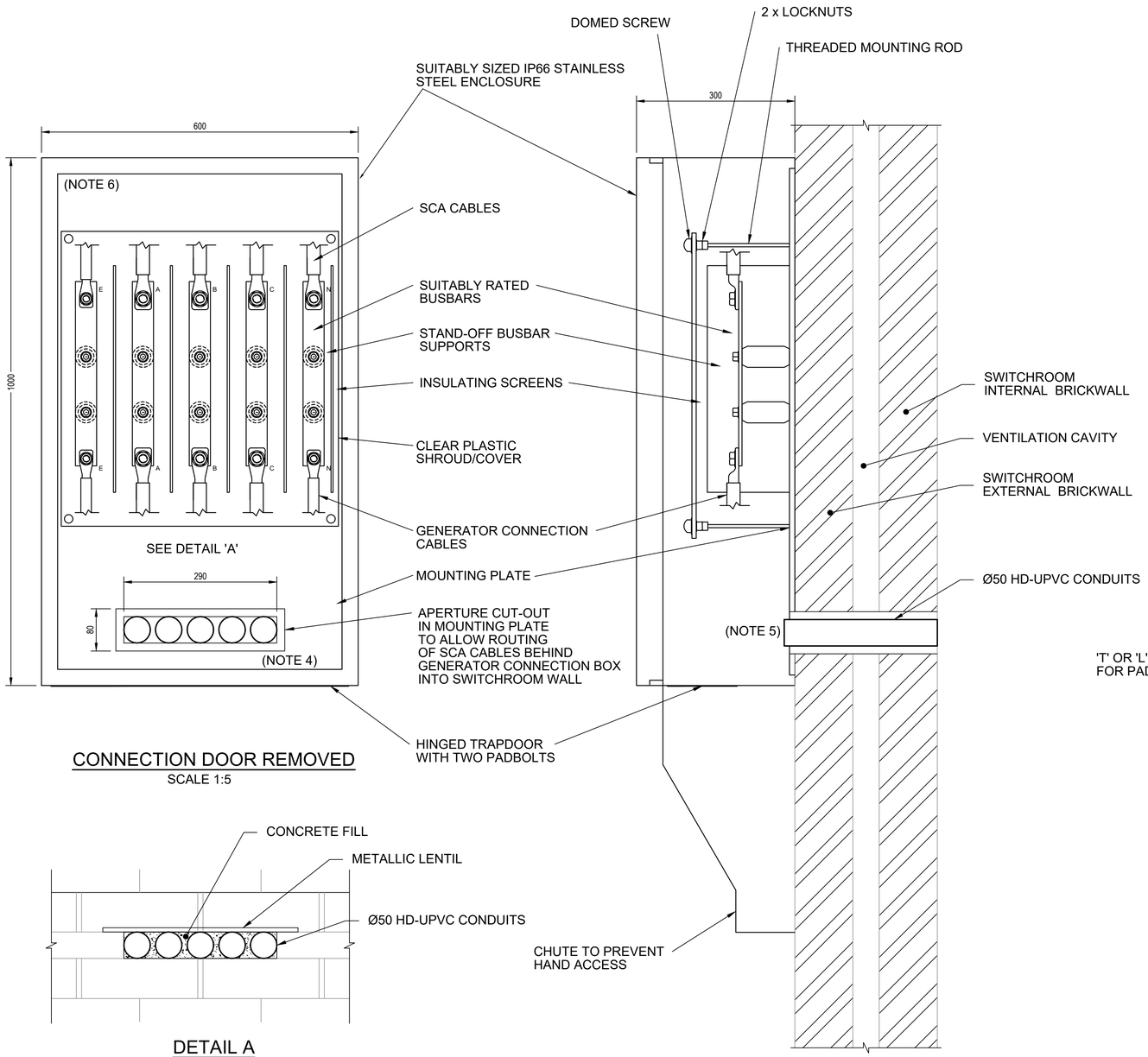

CONNECTION DOOR REMOVED
SCALE 1:5

DETAIL A
SWITCHROOM WALL CONDUIT PENETRATION
SCALE 1:5

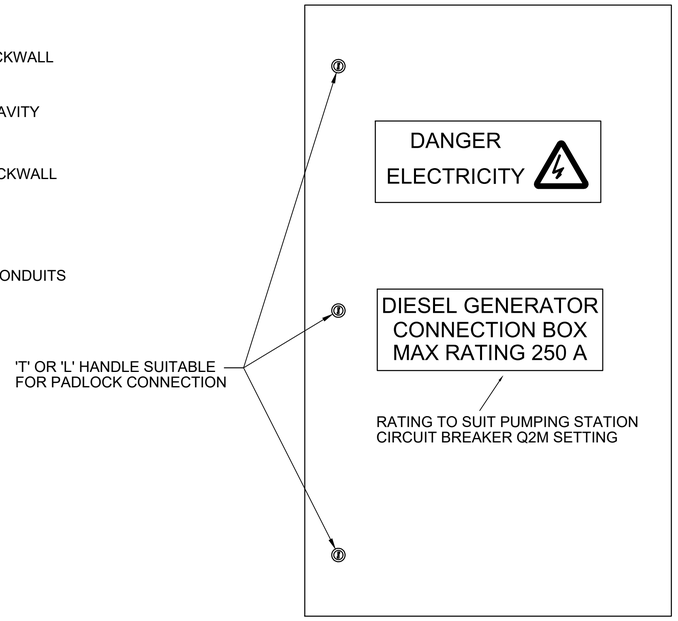

CONNECTION BOX WITH DOOR IN PLACE
N.T.S

0 0.05 0.1 0.15 0.2 0.25m
SCALE 1:5 AT ORIGINAL SIZE

No.	REVISION DETAILS	DWN	DATE
1	REISSUED FOR TENDER	RK	16.04.21
0	ISSUED FOR CONSTRUCTION	VP	27.10.16

CONSULTANT DETAILS:
GHD
57 Graham Street Nowra NSW 2541
T 61 2 4424 4900 F 61 2 4424 4999
E noamail@ghd.com W www.ghd.com

CONSULTANT REFERENCE No. 23-1426651

Shoalhaven Water
A Group of Shoalhaven City Council

DESIGNED: CP	DATE: 02.2016	COMPANY: GHD	
DRAWN: KT	DATE: 02.2016	COMPANY: GHD	
CHECKED: DB	DATE: 10.2016	COMPANY: GHD	
APPROVED: CS	DATE: 11.2016	COMPANY: GHD	

TITLE:
SHOALHAVEN WATER
LYREBIRD PARK NOWRA SPS2 UPGRADE
ELECTRICAL SERVICES
TYPICAL GENERATOR CONNECTION BOX DETAILS

SIZE	SCALE	INDEX No.	DRAWING No.	SHEET	REV No.
A1	AS SHOWN		23-24356	269	1

Plot Date: 15/04/21 - 20:24 Cad File: C:\CAD\temp\AcPublish_842032\23-24356-269.dwg

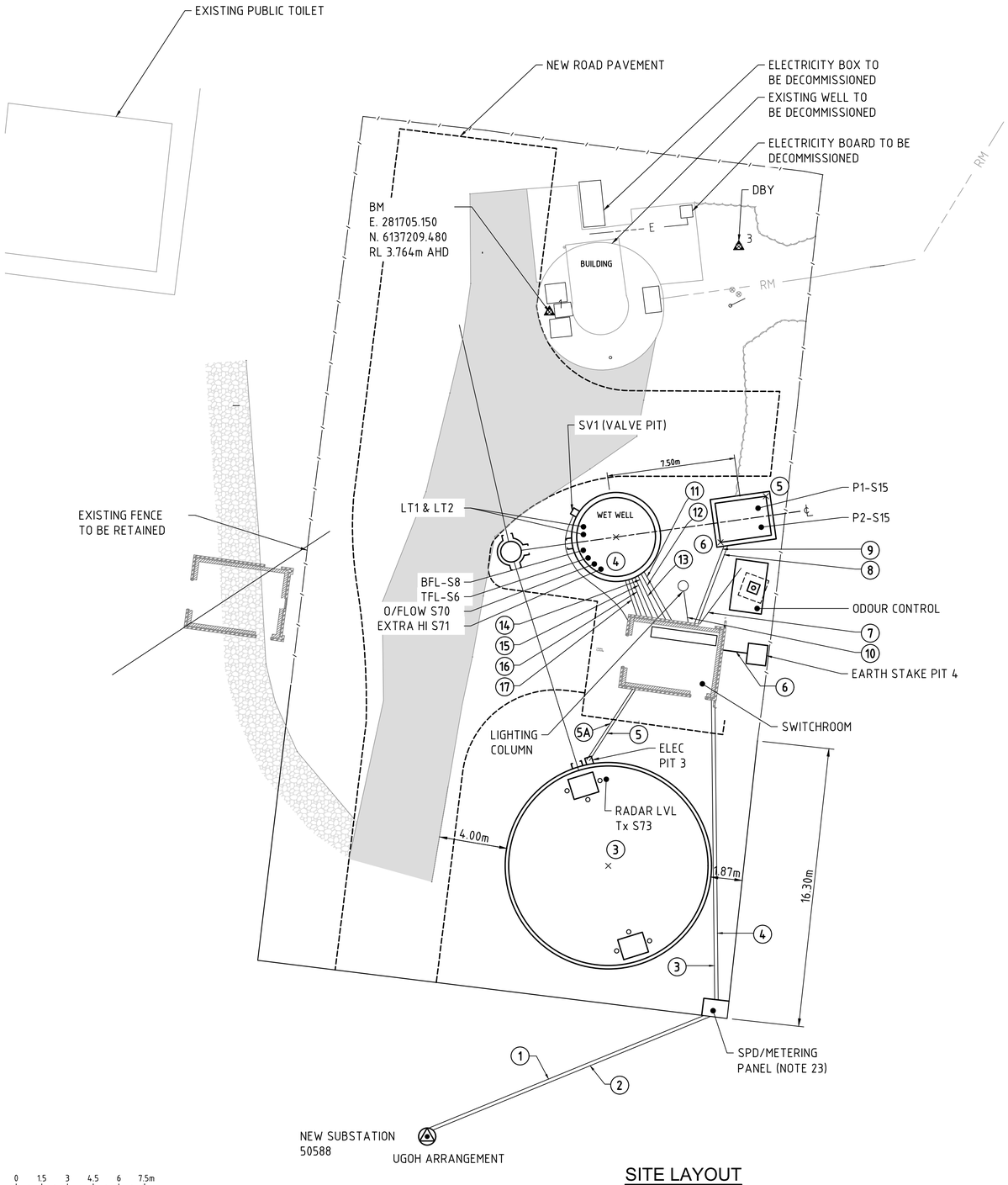

SITE LAYOUT
SCALE 1:100

0 1.5 3 4.5 6 7.5m
SCALE 1:150 AT ORIGINAL SIZE

CONDUIT LEGEND

ITEM	DESCRIPTION	SIZE/TYPE
1	CONSUMER MAINS	150 mm HD-UPVC
2	CONSUMER MAINS (SPARE)	150 mm HD-UPVC
3	CONSUMER MAINS	150 mm HD-UPVC
4	CONSUMER MAINS (SPARE)	150 mm HD-UPVC
5	SCA-PIT NO.3 (I&C)	80 mm HD-UPVC
5A	SCA-PIT NO.3 (SPARE)	80 mm HD-UPVC
6	MEN EARTH	80 mm HD-UPVC
7	ODOUR CTRL UNIT (PWR)	80 mm HD-UPVC
8	VALVE PIT (I&C)	80 mm HD-UPVC
9	VALVE PIT (SPARE)	80 mm HD-UPVC
10	LIGHTING (PWR)	80 mm HD-UPVC
11	PUMP 1 (PWR)	100 mm HD-UPVC
12	PUMP 1 (PWR)	100 mm HD-UPVC
13	PUMP 1 & 2 (CTRL)	100 mm HD-UPVC
14	PUMP 2 (PWR)	100 mm HD-UPVC
15	PUMP 2 (PWR)	100 mm HD-UPVC
16	WET WELL (I&C)	100 mm HD-UPVC
17	WET WELL (SPARE)	100 mm HD-UPVC
18	SCA-SV PIT	50 mm HD-UPVC
19		
20		
21		
22		
23		
24		

NOTES

1 ODOUR CONTROL REQUIREMENTS TO BE DETERMINED DURING DETAILED DESIGN.

2 EXISTING SPS FACILITY TO BE DEMOLISHED IN ACCORDANCE WITH THE SPECIFICATION + DRAWING

3 REFER TO DRAWING 24356-251 FOR GENERAL NOTES.

4 REFER TO THE CIVIL DRAWINGS FOR FULL DETAILS ON THE SITE.

5 WHERE THERE IS A CONFLICT BETWEEN DIMENSIONS OR LAYOUTS BETWEEN ANY ELECTRICAL SERVICE DRAWING IN THIS SET AND ANY CIVIL DRAWING, THE DIMENSIONS AND/OR LAYOUT OF THE CIVIL DRAWING SHALL BE DEEMED TO BE ACCURATE.

6 ALL LEVEL 2 ACCREDITATION WORK NECESSARY FOR THE CONNECTION TO ENDEAVOUR ENERGY NETWORK, INCLUDING UNDERGROUND RETICULATION AND METERING, SHALL BE CARRIED OUT AS PART OF THE WORK.

7 CARRY OUT ALL NECESSARY CO-ORDINATION WITH THE LEVEL 1 SERVICE PROVIDER. CARRY OUT WORK ON ENDEAVOUR ENERGY DISTRIBUTION SYSTEM.

8 THE LOCATION OF EQUIPMENT IS TYPICAL ONLY. FINAL LOCATION TO BE DETERMINED ON SITE.

9 SUPPLY AND INSTALL ALL NECESSARY BRACKETS ETC. TO ALLOW INSTALLATION OF THE ASSOCIATED ELECTRICAL SERVICES.

10 THE LEVEL EQUIPMENT SUPPORT BRACKETS SHALL BE LOCATED IN THE POSITION INDICATED ON THE DRAWING. AN ALTERNATIVE POSITION MAY BE CHOSEN IF THE LEVEL EQUIPMENT WOULD FOUL ANY OTHER EQUIPMENT OR WELL STRUCTURE.

11 ALL LEVEL SENSORS SHALL BE INSTALLED WITH ENOUGH CABLE SO AS TO BE ABLE TO REACH THE BOTTOM OF THE WELL. EACH LEVEL SENSOR SHALL BE INSTALLED SUCH THAT IT OPERATES AT ITS RESPECTIVE WATER LEVEL. ANY SPARE CABLE LENGTH LEFT WITHIN THE WELL SHALL BE EITHER LOOPED ON OR SUSPENDED IN A COIL OF ITS SUPPORT BRACKET IN ORDER TO ALLOW ADJUSTMENT IN THE FUTURE.

12 THE LEVEL SENSORS SHALL BE INSTALLED IN STILLING TUBES. REFER TO THE DRAWINGS FOR TYPICAL INSTALLATION DETAILS.

13 FOR THE LEVEL SENSORS AND REGULATORS OPERATING LEVELS REFER TO THE DRAWINGS.

14 ALL CONDUITS SHALL BE SEALED WHERE THEY EMERGE OUTSIDE THE SWITCHROOM. EXPANDING FOAM SHALL BE USED FOR SEALING.

15 SUPPLY AND INSTALL THE CABLE HOOKS, REFER TO THE DRAWINGS FOR DETAILS. INSTALL THE CABLE STOCKING SUPPLIED BY THE PUMP SUPPLIER.

16 PUMP CABLE HOOKS AND CABLE STOCKINGS TO BE INSTALLED CLEAR OF THE PUMP GUIDE RAILS TO PREVENT TANGLING OF AND DAMAGE TO THE PUMP CABLES DURING PUMP REMOVAL.

17 SUPPLY AND INSTALL PUMP IDENTIFICATION NUMBERS. THE PUMP NUMBERS SHALL BE FIXED ADJACENT TO THE GUIDE RAILS OF THE APPROPRIATE PUMP. THE NUMBERS SHALL BE 100 HIGH, MANUFACTURED OUT OF STAINLESS STEEL OR SUNLIGHT RESISTANT PLASTIC.

18 CONDUITS INSTALLED INSIDE THE PUMP WELL SHALL BE SECURED USING STAINLESS STEEL SADDLES AND FIXINGS.

19 ALL BOLTS, NUTS WASHERS ETC., USED SHALL BE 316 GRADE STAINLESS STEEL. ALL THREADS SHALL BE LUBRICATED IN ORDER TO PREVENT GALLING.

20 THE CONDUIT RETICULATION AND ALL ELECTRICAL EQUIPMENT IN THE VALVE PIT SHALL HAVE A DEGREE OF PROTECTION OF IP67. THE CONDUIT TO THE VALVE PIT SHALL BE SEALED WITH EXPANDING FOAM.

21 FLEXIBLE CONDUITS SHALL BE FLEXICON LPC OR RHINOFLEX CONDUITS. THE FLEXIBLE CONDUIT SYSTEM, INCLUDING ALL JOINTS SHALL HAVE A DEGREE OF PROTECTION OF IP67. CONDUIT FITTINGS SHALL BE NICKEL PLATED BRASS.

22 WHERE THE LENGTH OF FLEXIBLE CONDUIT BETWEEN ITEMS OF EQUIPMENT EXCEEDS 1000, THE FLEXIBLE CONDUIT SHALL BE CLAMPED TO THE STRUCTURE ADJACENT TO THE EQUIPMENT.

23 SPD/METERING PANEL DESIGN & SUPPLIED BY OTHERS.

No.	REVISION DETAILS	DWN	DATE
1	REISSUED FOR TENDER	RK	16.04.21
0	ISSUED FOR CONSTRUCTION	VP	27.10.16

CONSULTANT DETAILS:
GHD
57 Graham Street Nowra NSW 2541
T 61 2 4424 4900 F 61 2 4424 4999
E noamail@ghd.com W www.ghd.com

CONSULTANT REFERENCE No.
23-1426651

Shoalhaven Water
A Group of Shoalhaven City Council

DESIGNED: CP	DATE: 02.2016	COMPANY: GHD	
DRAWN: KT	DATE: 02.2016	COMPANY: GHD	
CHECKED: DB	DATE: 10.2016	COMPANY: GHD	
APPROVED: CS	DATE: 11.2016	COMPANY: GHD	

TITLE:
SHOALHAVEN WATER
LYREBIRD PARK NOWRA SPS2 UPGRADE
ELECTRICAL SERVICES
SITE LAYOUT

SIZE	SCALE	INDEX No.	DRAWING No.	SHEET	REV No.
A1	1:100m		23-24356	275	1

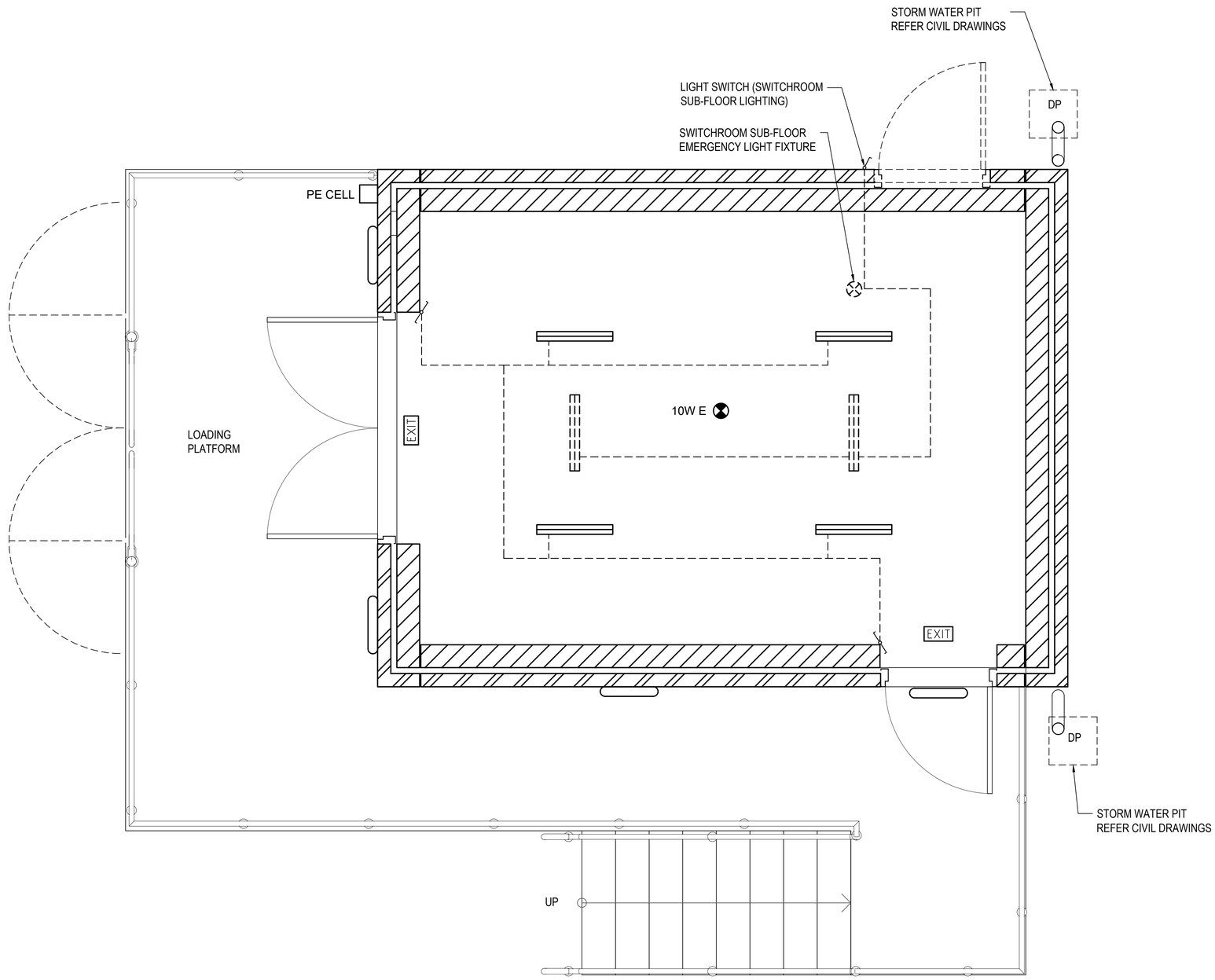

SWITCHROOM LIGHTING LAYOUT

SCALE 1:20

0 0.2 0.4 0.6 0.8 1.0m

SCALE 1:20 AT ORIGINAL SIZE

NOTES:

1 ALL WORK SHALL COMPLY WITH SHOALHAVEN WATER'S STANDARD SPECIFICATION, THE NEW SOUTH WALES SERVICE AND INSTALLATION RULES AND AS 3000.

2 THE FINAL LOCATION OF ALL EQUIPMENT SHALL BE DETERMINED ON SITE.

3 SPARE NOTE.

4 FLEXIBLE CONDUITS SHALL BE FLEXICON LPC OR RHINOFLEX CONDUITS. THE FLEXIBLE CONDUIT SYSTEM, INCLUDING ALL JOINTS SHALL HAVE A DEGREE OF PROTECTION OF IP67. CONDUIT FITTINGS SHALL BE NICKEL PLATED BRASS.

5 LIGHTING FIXTURES SHOWN ARE TYPICAL. INTERNAL/EXTERNAL LIGHTING SHALL COMPLY TO AS1680 & AS2293 REQUIREMENTS. NUMBER, TYPE & LOCATION OF LIGHTING FIXTURES SHALL BE DETERMINED BY THE CONTRACTOR.

LEGEND:

- PIERLITE 2 x 36W UNILUX ENCLOSED PRISMATIC LUMINAIRE CEILING LIGHTING FIXTURE OR EQUIVALENT
- PIERLITE 2 x 36W UNILUX ENCLOSED PRISMATIC LUMINAIRE SUB-FLOOR LIGHTING FIXTURE OR EQUIVALENT
- PIERLITE 1 x 18W VANDALUX LUMINAIRE WITH OPAL DIFFUSER AREA LIGHTING FIXTURE OR EQUIVALENT
- ONE WAY LIGHT SWITCH
- TWO WAY LIGHT SWITCH
- PE CELL — PHOTO-ELECTRIC CELL
- PIERLITE LIGHTING FIREFLY EMERGENCY LUMINAIRE OR EQUIVALENT
- EXIT — PIERLITE LED BLADE EXIT LUMINAIRE OR EQUIVALENT

No.	REVISION DETAILS	DWN	DATE
1	REISSUED FOR TENDER	RK	16.04.21
0	ISSUED FOR CONSTRUCTION	VP	27.10.16

CONSULTANT DETAILS:
GHD
57 Graham Street Nowra NSW 2541
T 61 2 4424 4900 F 61 2 4424 4999
E noamail@ghd.com W www.ghd.com

CONSULTANT REFERENCE No. 23-1426651

Shoalhaven Water
A Group of Shoalhaven City Council

DESIGNED: CP	DATE: 02.2016	COMPANY: GHD	
DRAWN: KT	DATE: 02.2016	COMPANY: GHD	
CHECKED: DB	DATE: 10.2016	COMPANY: GHD	
APPROVED: CS	DATE: 11.2016	COMPANY: GHD	

TITLE:
SHOALHAVEN WATER
LYREBIRD PARK NOWRA SPS2 UPGRADE
ELECTRICAL SERVICES
TYPICAL SWITCHROOM DETAILS
SHEET 1 OF 2

SIZE	SCALE	INDEX No.	DRAWING No.	SHEET	REV No.
A1	1:20m		23-24356	277	1

Plot Date: 15/04/21 - 20:24 Cad File: C:\CAD\temp\AcPublish_842032\23-24356-277.dwg

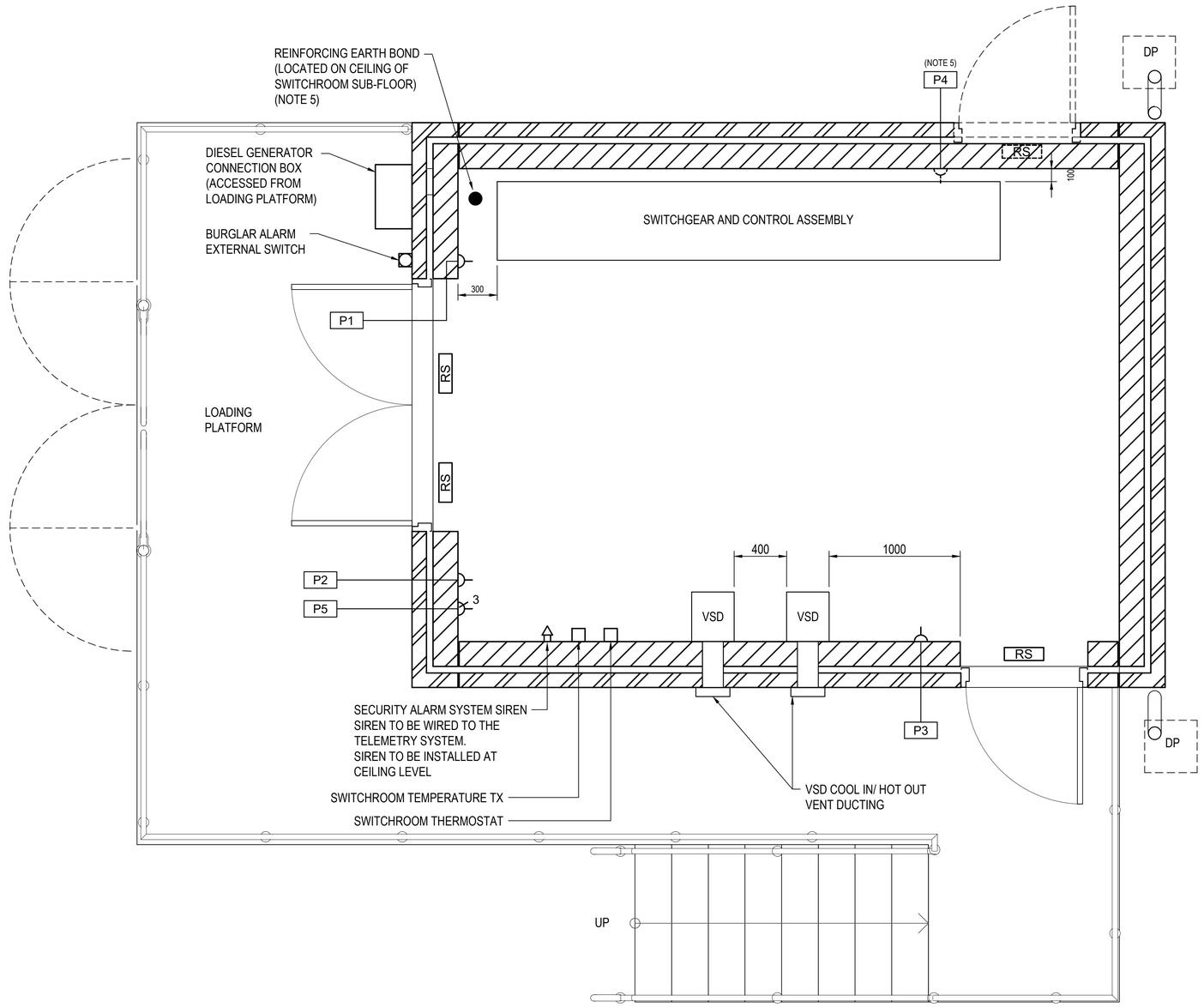

SWITCHROOM POWER & EQUIPMENT LAYOUT

SCALE 1:20

0 0.2 0.4 0.6 0.8 1.0m

SCALE 1:20 AT ORIGINAL SIZE

NOTES:

1 ALL WORK SHALL COMPLY WITH SHOALHAVEN WATER'S STANDARD SPECIFICATION, THE NEW SOUTH WALES SERVICE AND INSTALLATION RULES AND AS 3000.

2 THE FINAL LOCATION OF ALL EQUIPMENT SHALL BE DETERMINED ON SITE.

3 THE SWITCHGEAR AND CONTROL GEAR ASSEMBLY SHALL BE FIXED WITH A MINIMUM OF THREE HOT DIPPED GALVANISED SUPPORT BRACKETS TO OFFSET THE SCA FROM THE WALLS BY 100 mm. THE SUPPORT BRACKETS SHALL BE FIXED TO THE WALLS USING 75 LONG x 10 DIAMETER STAINLESS STEEL MASONRY ANCHORS.

4 FLEXIBLE CONDUITS SHALL BE FLEXICON LPC OR RHINOFLEX CONDUITS. THE FLEXIBLE CONDUIT SYSTEM, INCLUDING ALL JOINTS SHALL HAVE A DEGREE OF PROTECTION OF IP67. CONDUIT FITTINGS SHALL BE NICKEL PLATED BRASS.

5 SWITCHROOM REINFORCING EARTH BOND SHALL HAVE THE SWITCHROOM BUILDING & CONCRETE REINFORCEMENT METALLIC OBJECTS INCLUDING COLUMNS & ROOF STRUCTURES ETC TIED TO THIS POINT. ELECTRICAL INSTALLATION CONTRACTOR TO TIE SWITCHROOM REINFORCING EARTH TO SWITCHBOARD EARTH.

LEGEND:

	SINGLE SOCKET OUTLET, 900 ABOVE FLOOR
3	IP56 20 AMPERE THREE PHASE 5 PIN OUTLET, 900 ABOVE FLOOR
RS	DOOR ALARM (REED) SWITCH - MODEL 05515 BROWN REED SWITCH AVAILABLE FROM SECURITY MERCHANTS AUST. P/L
	SECURITY ALARM SIREN - MODEL 40169 12V AVAILABLE FROM SECURITY MERCHANTS AUST. P/L
	BURGLAR ALARM EXTERNAL KEY SWITCH - MODEL KD215003-8415/1.2 AVAILABLE FROM LOCK IT WELL P/L

No.	REVISION DETAILS	DWN	DATE
1	REISSUED FOR TENDER	RK	16.04.21
0	ISSUED FOR CONSTRUCTION	VP	27.10.16

CONSULTANT DETAILS:
GHD
57 Graham Street Nowra NSW 2541
T 61 2 4424 4900 F 61 2 4424 4999
E noamail@ghd.com W www.ghd.com

CONSULTANT REFERENCE No. 23-1426651

Shoalhaven Water
A Group of Shoalhaven City Council

DESIGNED: CP	DATE: 02.2016	COMPANY: GHD	
DRAWN: KT	DATE: 02.2016	COMPANY: GHD	
CHECKED: DB	DATE: 10.2016	COMPANY: GHD	
APPROVED: CS	DATE: 11.2016	COMPANY: GHD	

TITLE:
SHOALHAVEN WATER
LYREBIRD PARK NOWRA SPS2 UPGRADE
ELECTRICAL SERVICES
TYPICAL SWITCHROOM DETAILS
SHEET 2 OF 2

SIZE	SCALE	INDEX No.	DRAWING No.	SHEET	REV No.
A1	1:20m		23-24356	278	1

Plot Date: 15/04/21 - 20:25 Cad File: C:\CAD\temp\AcPublish_842032\23-24356-278.dwg

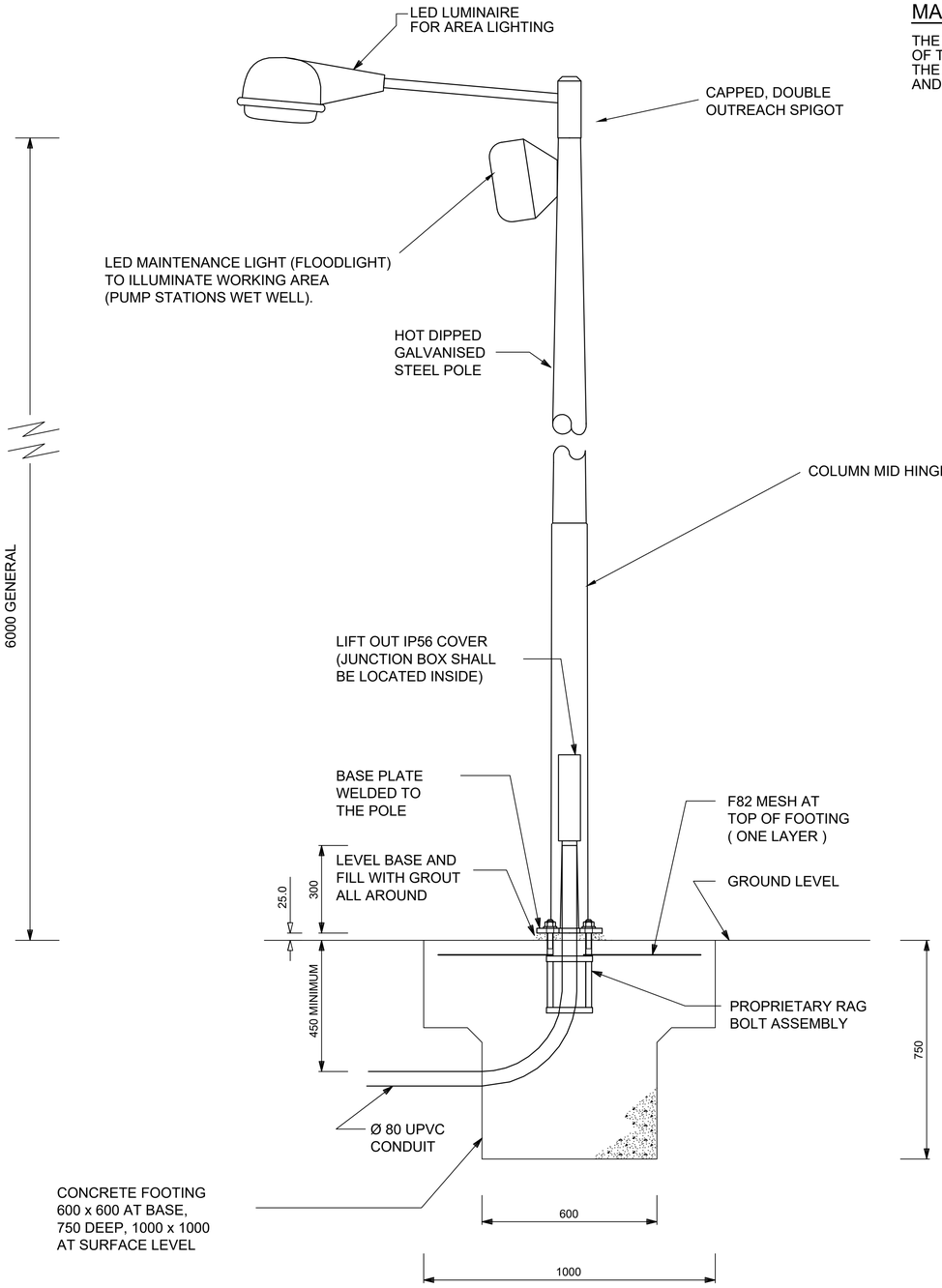

MAINTENANCE LIGHT

THE MAINTENANCE LIGHTING LUMINAIRE SHALL BE SELECTED TO PROVIDE MAXIMUM ILLUMINATION OF THE AREA FOR MAINTENANCE PURPOSES. THE LUMINAIRES SELECTED SHALL COMPLY WITH THE REQUIREMENTS OF AS 4282. SUBMIT PHOTOMETRIC DATA SHOWING THE AREA OF COVERAGE AND THE ILLUMINATION LEVELS.

NOTES

1 THE RAGBOLT ASSEMBLY, THE UNDERGROUND CONDUIT AND THE CONCRETE FOOTING SHOWN SHALL BE SUPPLIED AND INSTALLED AS PART OF THE SPECIFIED WORK .
THE DIMENSIONS OF FOOTING AND REINFORCING STEEL SHOWN ARE MINIMUM REQUIREMENTS . THE CONCRETE FOOTING SHALL BE DESIGNED IN ACCORDANCE WITH THE CODES FOR LIGHTING POLE INSTALLATION .

2 THE LADDER REST SHALL BE LOCATED SUCH THAT THE LUMINAIRE MAY BE SERVICED FROM THE ROADWAY SIDE .

3 THE COLUMNS SHALL BE CONSTRUCTED AND BALANCED TO ALLOW SERVICING BY ONE PERSON.

4 THE COLUMNS SHALL HAVE A BONDED BRAID BETWEEN MOVING PARTS TO PROVIDE A GOOD EARTHING AND TO PREVENT ARCING AT THE HINGE IN THE EVENT OF LIGHTNING STRIKES

5 THE COLUMNS LATCHING MECHANISMS SHALL HAVE A SAFETY INTERLOCK FOR OPERATION IN WINDY CONDITIONS AND HAVE PADLOCKING FACILITIES. PROVIDE PADLOCKS FOR EACH COLUMN, THE PADLOCKS SHALL BE KEYED TO CODE 92268.

6 THE GROUTING OF THE LIGHTING COLUMN'S BASE PLATE SHALL BE CARRIED OUT AS PART OF THE SPECIFIED WORK .

AREA LIGHTING COLUMN TYPICAL DETAIL

SCALE 1 : 10

AREA LIGHTING COLUMN SHOWN ONLY

0 0.1 0.2 0.3 0.4 0.5m
SCALE 1:10 AT ORIGINAL SIZE

No.	REVISION DETAILS	DWN	DATE
1	REISSUED FOR TENDER	RK	16.04.21
0	ISSUED FOR CONSTRUCTION	VP	27.10.16

CONSULTANT DETAILS:
GHD
57 Graham Street Nowra NSW 2541
T 61 2 4424 4900 F 61 2 4424 4999
E noamail@ghd.com W www.ghd.com

CONSULTANT REFERENCE No. 23-1426651

Shoalhaven Water
A Group of Shoalhaven City Council

DESIGNED: CP	DATE: 02.2016	COMPANY: GHD	
DRAWN: KT	DATE: 02.2016	COMPANY: GHD	
CHECKED: DB	DATE: 10.2016	COMPANY: GHD	
APPROVED: CS	DATE: 11.2016	COMPANY: GHD	

TITLE:
SHOALHAVEN WATER
LYREBIRD PARK NOWRA SPS2 UPGRADE
ELECTRICAL SERVICES
AREA LIGHTING COLUMN
TYPICAL DETAILS

SIZE	SCALE	INDEX No.	DRAWING No.	SHEET	REV No.
A1	N.T.S.		23-24356	279	1

Plot Date: 15/04/21 - 20:25 Cad File: C:\CAD\temp\AcPublish_842032\23-24356-279.dwg

- NOTICE -

THIS DOCUMENT CONTAINS PROPRIETARY INFORMATION OF DANFOSS DRIVES. IT IS LOANED BY DANFOSS DRIVES SUBJECT TO THE CONDITIONS THAT IT AND THE INFORMATION EMBODIED THEREIN SHALL BE USED ONLY FOR RECORD AND REFERENCE PURPOSES, SHALL NOT BE USED OR CAUSED TO BE USED IN ANY WAY PREJUDICIAL TO THE INTERESTS OF DANFOSS DRIVES, SHALL NOT BE REPRODUCED OR COPIED IN WHOLE OR IN PART OR DISCLOSED TO ANYONE WITHOUT THE DIRECT WRITTEN PERMISSION OF DANFOSS DRIVES, AND SHALL BE RETURNED UPON REQUEST.

REVISION HISTORY			
REV	ECN NUMBER	ENTRY BY	DATE
001	INITIAL RELEASE	PK	04/24/12
002	HP12060	KD	08/01/12

ASSY, BOTTOM DUCT

ITEM	PN	QTY	NOTES
1	177G5684	1	
2	177G5685	1	
3	177G5686	1	
4	177G5687	1	
5	177G5688	1	
6	177G5689	1	
7	177G5690	1	
8	177G5697	1	
9	177G5698	1	
10	177G5811	1	
11	26513	21	

ASSY, BOTTOM DUCT, SS

ITEM	PN	QTY	NOTES
1	177G6254	1	
2	177G5685	1	
3	177G5686	1	
4	177G6255	1	
5	177G5688	1	
6	177G5689	1	
7	177G5690	1	
8	177G5697	1	
9	177G6256	1	
10	177G6257	1	
11	177G1303	21	

003

ASSY, TOP PLATE

ITEM	PN	QTY	NOTES
1	681X9143	11	
2	177G5654	1	
3	177G5655	1	
4	177G5662	1	USE TO SEAL THE CUT-OUT
5	177G5683	1	
6	177G5877	1	
7	177G5879	1	

ASSY, TOP PLATE , SS

ITEM	PN	QTY	NOTES
1	177G1309	11	
2	177G6258	1	
3	177G5655	1	
4	177G5662	1	USE TO SEAL THE CUT-OUT
5	177G5683	1	
6	177G6519	1	
7	177G5879	1	

003

TORQUE REQUIREMENT:

1. M5 SCREWS/NUTS TORQUE TO 2.27 N-m (20.1 IN-LB) .
2. M10 NUTS TORQUE TO 19.09 N-m (169.0 IN-LB) .

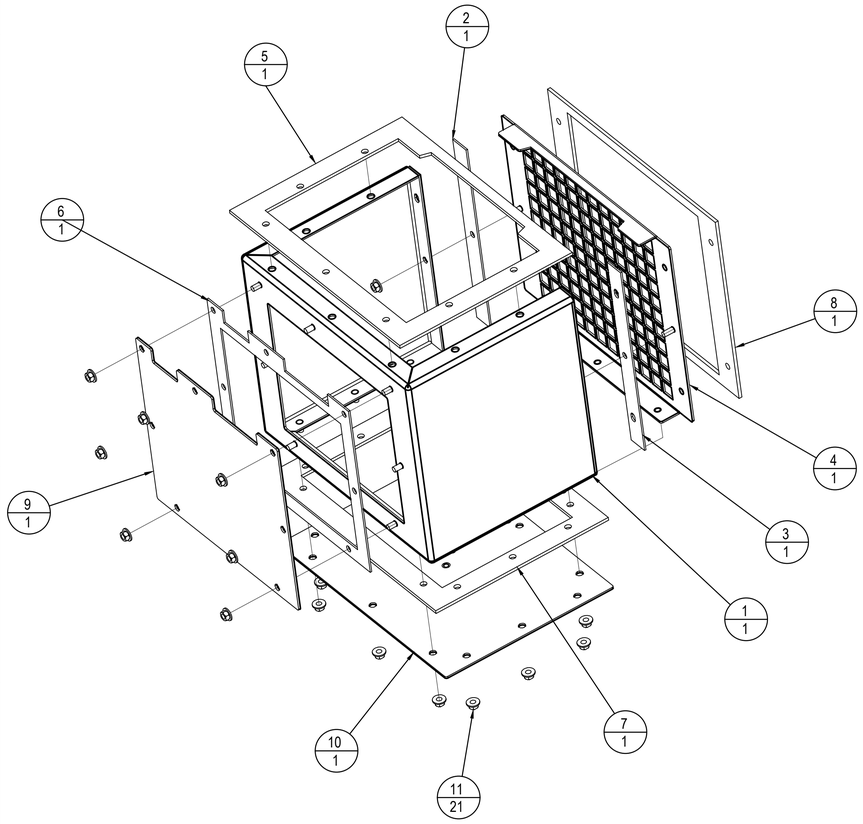

TOP OF DRIVE

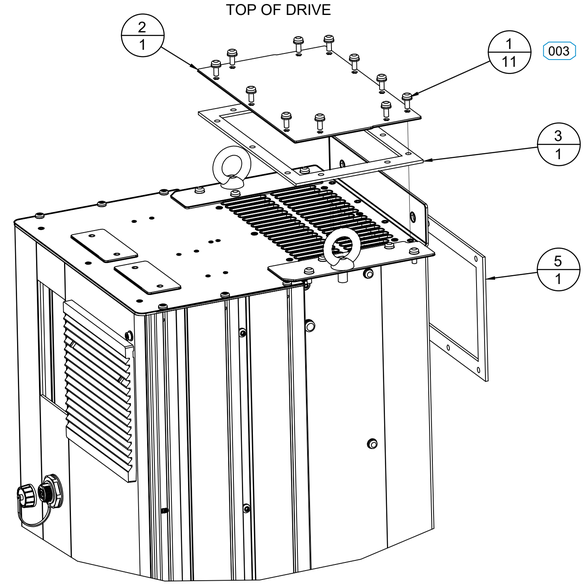

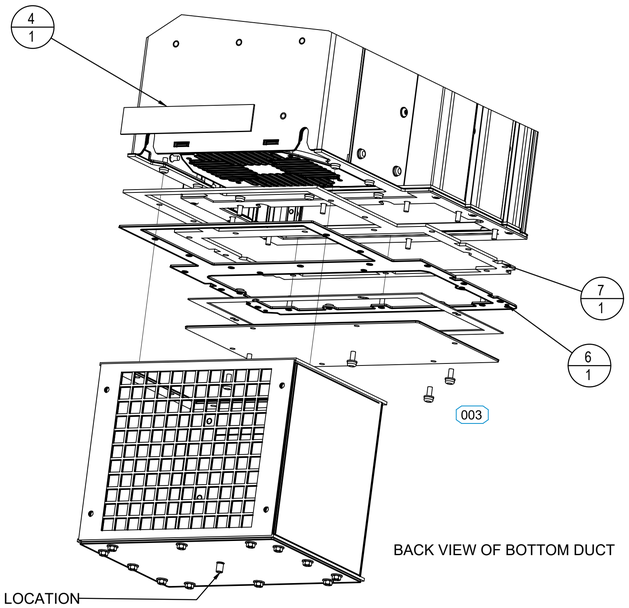

BACK VIEW OF BOTTOM DUCT

DRAIN HOSE FITTING LOCATION

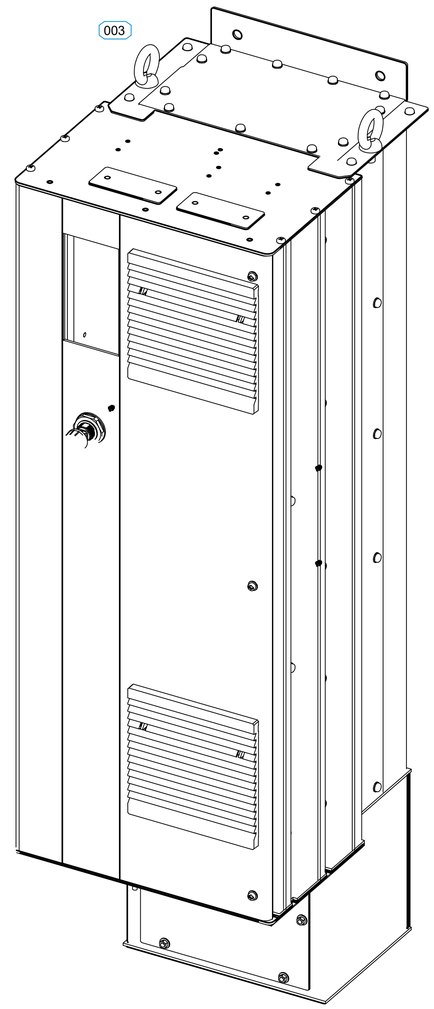

DRIVE WITH TOP PLATE AND BOTTOM DUCT ASSY

No.	REVISION DETAILS	DWN	DATE
1	REISSUED FOR TENDER	RK	16.04.21
0	ISSUED FOR CONSTRUCTION	VP	27.10.16

CONSULTANT DETAILS:
GHD
57 Graham Street Nowra NSW 2541
T 61 2 4424 4900 F 61 2 4424 4999
E noamail@ghd.com W www.ghd.com

CONSULTANT REFERENCE No.
23-1426651

Shoalhaven Water
A Group of Shoalhaven City Council

DESIGNED: CP	DATE: 02.2016	COMPANY: GHD	
DRAWN: KT	DATE: 02.2016	COMPANY: GHD	
CHECKED: DB	DATE: 10.2016	COMPANY: GHD	
APPROVED: CS	DATE: 11.2016	COMPANY: GHD	

TITLE:
SHOALHAVEN WATER
LYREBIRD PARK NOWRA SPS2 UPGRADE
ELECTRICAL SERVICES
VSD BACK CHANNEL COOLING INSTR, DUCT, IN-BACK/OUT-BACK, D1H
SHEET 1 OF 2

SIZE	SCALE	INDEX No.	DRAWING No.	SHEET	REV No.
A1	N.T.S.		23-24356	280	1

- NOTICE -

THIS DOCUMENT CONTAINS PROPRIETARY INFORMATION OF DANFOSS DRIVES. IT IS LOANED BY DANFOSS DRIVES SUBJECT TO THE CONDITIONS THAT IT AND THE INFORMATION EMBODIED THEREIN SHALL BE USED ONLY FOR RECORD AND REFERENCE PURPOSES, SHALL NOT BE USED OR CAUSED TO BE USED IN ANY WAY PREJUDICIAL TO THE INTERESTS OF DANFOSS DRIVES, SHALL NOT BE REPRODUCED OR COPIED IN WHOLE OR IN PART OR DISCLOSED TO ANYONE WITHOUT THE DIRECT WRITTEN PERMISSION OF DANFOSS DRIVES, AND SHALL BE RETURNED UPON REQUEST.



DRIVE WITH DUCT ASSEMBLYFOR WALL MOUNTING

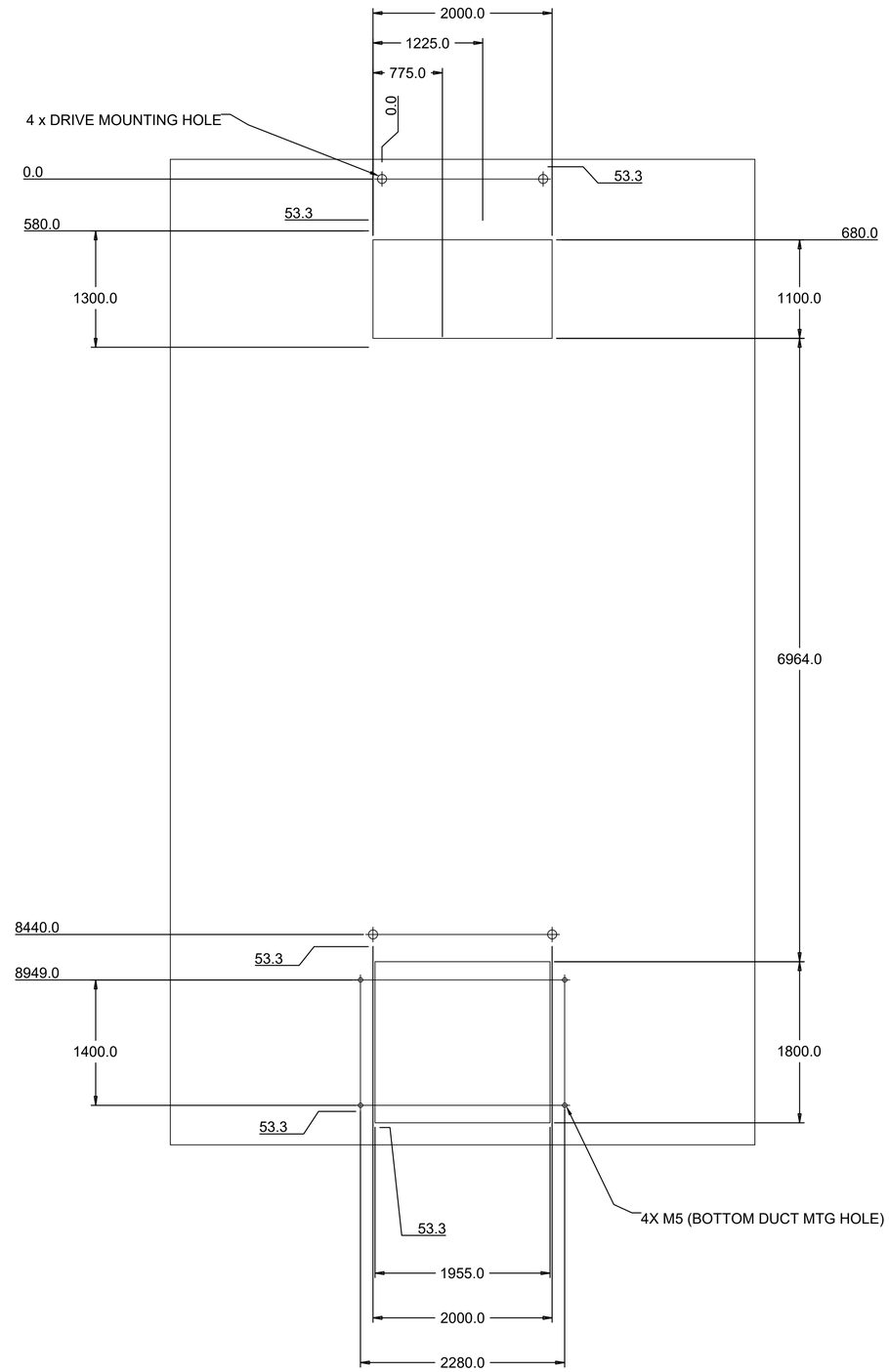

LOCATION OF DRIVE MOUNTING ON WALL

NOTES:

1. A DRAIN HOSE PROVIDED WITH KIT SHOULD BE ATTACHED IF THERE IS CONCERN THAT WATER MAY ACCUMULATE IN THE BOTTOM PLATE OF INTERNAL DUCT.
2. IF NOT, PLUG THE DRAIN PLUG WITH A SCREW PROVIDED WITH THE KIT, IT IS RECOMMENDED THAT TEFLON TAPE TO BE USED WITH THE SCREW TO SEAL THE DRAIN PLUG.

No.	REVISION DETAILS	DWN	DATE
1	REISSUED FOR TENDER	RK	16.04.21
0	ISSUED FOR CONSTRUCTION	VP	27.10.16

CONSULTANT DETAILS:
GHD
57 Graham Street Nowra NSW 2541
T 61 2 4424 4900 F 61 2 4424 4999
E noamail@ghd.com W www.ghd.com

CONSULTANT REFERENCE No. 23-1426651

Shoalhaven Water
A Group of Shoalhaven City Council

DESIGNED: CP	DATE: 02.2016	COMPANY: GHD	
DRAWN: KT	DATE: 02.2016	COMPANY: GHD	
CHECKED: DB	DATE: 10.2016	COMPANY: GHD	
APPROVED: CS	DATE: 11.2016	COMPANY: GHD	

TITLE:
SHOALHAVEN WATER
LYREBIRD PARK NOWRA SPS2 UPGRADE
ELECTRICAL SERVICES
VSD BACK CHANNEL COOLING INSTR, DUCT, IN-BACK/OUT-BACK, D1H
SHEET 2 OF 2

SIZE	SCALE	INDEX No.	DRAWING No.	SHEET	REV No.
A1	N.T.S.		23-24356	281	1



TYPICAL EXTERNAL VIEW OF THE BACK CHANNEL COOLING



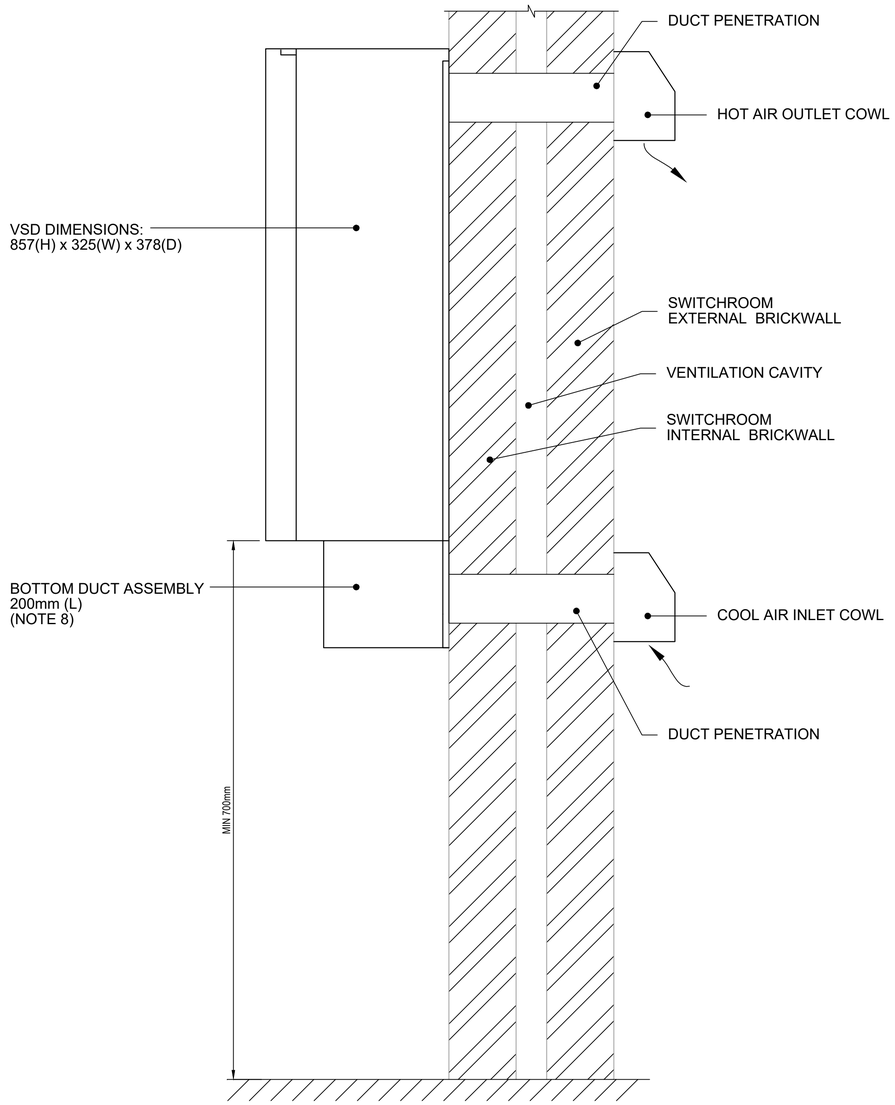

NOTES

1. EXTERNAL COWLS SHALL BE 316 SS AND BE SUITABLY SIZED TO ALLOW ADEQUATE/UNRESTRICTED AIR FLOW.
2. COWL OPENINGS SHALL BE COVERED BY 316 SS MESH/GUARD TO INHIBIT VERMIN ENTRY, BUT NOT RESTRICT AIR FLOW OR CREATE EXCESSIVE PRESSURE DROP.
3. REFER TO DANFOSS PROPRIETARY DOCUMENTATION FOR INSTALLATION GUIDELINES.
4. WALL PENETRATION DUCTING SHALL BE MADE FROM SUITABLE MATERIAL.
5. ALL WORK/FINISHING SHALL BE NEAT AND MAINTAIN BUILDING INTEGRITY.
6. COWL/DUCT PENETRATIONS SHALL BE DETERMINED BY THE CONTRACTOR SUCH THAT THERE IS A MINIMUM 700mm CLEARANCE FROM THE BASE OF THE VSD (NOT THE LOWER DUCT ASSEMBLY) TO FACILITATE CABLE TERMINATION.
7. WALL/CAVITY PENETRATION PERIMETERS SHALL BE ADEQUATELY SEALED TO EFFECTIVELY INHIBIT DUCT/MOISTURE PENETRATION.
8. BOTTOM DUCT ASSEMBLY PART OF BACK-CHANNEL COOLING KIT PART N° 176F3648

No.	REVISION DETAILS	DWN	DATE
1	REISSUED FOR TENDER	RK	16.04.21
0	ISSUED FOR CONSTRUCTION	VP	27.10.16

CONSULTANT DETAILS:
GHD
57 Graham Street Nowra NSW 2541
T 61 2 4424 4900 F 61 2 4424 4999
E noamail@ghd.com W www.ghd.com

CONSULTANT REFERENCE No.
23-1426651

Shoalhaven Water
A Group of Shoalhaven City Council

DESIGNED: CP	DATE: 02.2016	COMPANY: GHD	
DRAWN: KT	DATE: 02.2016	COMPANY: GHD	
CHECKED: DB	DATE: 10.2016	COMPANY: GHD	
APPROVED: CS	DATE: 11.2016	COMPANY: GHD	

TITLE:
SHOALHAVEN WATER
LYREBIRD PARK NOWRA SPS2 UPGRADE
ELECTRICAL SERVICES
TYPICAL VSD BACK-CHANNEL COOLING INSTALLATION DETAIL

SIZE	SCALE	INDEX No.	DRAWING No.	SHEET	REV No.
A1	NTS		23-24356	282	1

Plot Date: 15/04/21 - 20:26 Cad File: C:\CAD\temp\AcPublish_842032\23-24356-282.dwg

CABLE N°	TO - FROM	CONDUIT SIZE AND TYPE	APPROX. LENGTH (m)	CONDUIT ID/ ROUTING (NOTE 1)	TYPE AND SIZE OF CABLE	VOLTAGE GRADE kV	CURRENT RATING & DERATING FACTORS TO AS 3008.1	VOLTAGE DROP FROM POA TO EQUIPMENT TO AS 3008.1	MAXIMUM CIRCUIT LENGTH FOR CORRECT OPERATION AGAINST INDIRECT CONTACT FAULT-LOOP IMPEDANCE	CIRCUIT DIAGRAM N°	TERMINATION DRAWING No
P001	SS 50558 TO SPD/METERING PANEL	150 mm HD-UPVC	20 m	1	4 x 1 CORE 185 mm² XLPE/PVC	0.6/1.0 kV	345A	1.71 VOLTS	N/A	251	N/A
P001A	SPD/METERING PANEL TO SCA	150 mm HD-UPVC	30 m	3	4 x 1 CORE 185 mm² XLPE/PVC	0.6/1.0 kV	345A	1.71 VOLTS	N/A	251	N/A
P002	SCA TO GENERATOR CONNECTION BOX	CABLE TRAY	10 m	N/A	4 x 1 CORE 95 mm² PVC/PVC FLEX	0.6/1.0 kV	341A	2.80 VOLTS	N/A	251	N/A
P003	SCA TO BUILDING LIGHTS CIRCUIT L1	CABLE TRAY	15 m	N/A	2c+E 1.5 mm² PVC/PVC (FLAT)	0.6/1.0 kV	19A	0.7 VOLTS	120 m	253	N/A
P004	SCA TO SWITCHROOM VENT FAN 1 - NORM	CABLE TRAY	15 m	N/A	2c+E 1.5 mm² PVC/PVC (FLAT)	0.6/1.0 kV	19A	0.5 VOLTS	180 m	253	N/A
P005	SCA TO AREA LIGHTS CIRCUIT L2	80 mm HD-UPVC	15 m	10	2c+E 1.5 mm² PVC/PVC	0.6/1.0 kV	19A	0.5 VOLTS	200 m	253	N/A
P006	SCA TO WELL MAINTENANCE LIGHT CIRCUIT L2	80 mm HD-UPVC	15 m	10	2c+E 1.5 mm² PVC/PVC	0.6/1.0 kV	19A	0.5 VOLTS	210 m	253	N/A
P007	SCA TO BUILDING POWER CIRCUIT P1	CABLE TRAY	20 m	N/A	2c+E 2.5 mm² PVC/PVC	0.6/1.0 kV	27A	1.1 VOLTS	100 m	253	N/A
P008	SCA TO 16A 3 PHASE OUTLET CIRCUIT P2	CABLE TRAY	10 m	N/A	4c+E 2.5 mm² PVC/PVC	0.6/1.0 kV	20A	2.3 VOLTS	40 m	253	N/A
P009											
P010	SCA TO SWITCHROOM VENT FAN 2 - PEAK	CABLE TRAY	15 m	N/A	2c+E 1.5 mm² PVC/PVC (FLAT)	0.6/1.0 kV	19A	0.5 VOLTS	180 m	253	N/A
P101	SCA TO PUMP N°1 VSD	CABLE TRAY	10 m	N/A	3c+E 95 mm² XLPE/PVC	0.6/1.0 kV	283A	0.8 VOLTS	75 m	257	301,304
P102A	PUMP N°1 VSD TO PUMP N°1 (NOTE 2)	100 mm HD-UPVC	25 m	11	3 x 35 mm² + 3 x 16/3E SUBMERSIBLE	0.6/1.0 kV	117A	3.2 VOLTS	79 m	257	304
P102B	PUMP N°1 VSD TO PUMP N°1 (NOTE 2)	100 mm HD-UPVC	25 m	12	3 x 35 mm² + 3 x 16/3E SUBMERSIBLE	0.6/1.0 kV	117A	3.2 VOLTS	79 m	257	304
P201	SCA TO PUMP N°2 VSD	CABLE TRAY	10 m	N/A	3c+E 95 mm² XLPE/PVC	0.6/1.0 kV	283A	0.8 VOLTS	75 m	257	304,305
P202A	PUMP N°2 VSD TO PUMP N°2 (NOTE 2)	100 mm HD-UPVC	25 m	12	3 x 35 mm² + 3 x 16/3E SUBMERSIBLE	0.6/1.0 kV	117A	3.2 VOLTS	79 m	257	305
P202B	PUMP N°2 VSD TO PUMP N°2 (NOTE 2)	100 mm HD-UPVC	25 m	12	3 x 35 mm² + 3 x 16/3E SUBMERSIBLE	0.6/1.0 kV	117A	3.2 VOLTS	79 m	257	305
P301	SCA TO ODOUR CONTROL FAN N°1	100 mm HD-UPVC	12 m	7	3c+E 2.5 mm² PVC/PVC	0.6/1.0 kV	22A	0.3 VOLTS	414 m	254	254
P401	SCA TO ODOUR CONTROL FAN N°2	100 mm HD-UPVC	12 m	7	3c+E 2.5 mm² PVC/PVC	0.6/1.0 kV	22A	0.3 VOLTS	414 m	254	254
E001	SCA TO MAIN EARTH ELECTRODE	80 mm HD-UPVC	5 m	6	1 CORE 120 mm² PVC EARTH	0.6/1.0 kV	N/A	N/A	N/A	251	N/A
E002	SCA TO GENERATOR CONNECTION BOX	CABLE TRAY	10 m	N/A	1 CORE 35 mm² PVC EARTH	0.6/1.0 kV	N/A	N/A	N/A	251	N/A
E003	SCA TO WATER PIPE BOND	25 mm HD-UPVC	20 m		1 CORE 10 mm² PVC EARTH	0.6/1.0 kV	N/A	N/A	N/A	251	N/A
E004	SCA TO SWITCHROOM REINFORCING BOND	CABLE TRAY	5 m	N/A	1 CORE 120 mm² PVC EARTH	0.6/1.0 kV	N/A	N/A	N/A	251	N/A

NOTES

1 REFER TO ELECTRICAL SERVICES LAYOUT DRAWING 225 FOR CONDUIT LAYOUT AND ID/ROUTING DETAILS

2 RUN IN SEPARATE CONDUITS TO LIMIT DE-RATING EFFECTS CABLE AS SPECIFIED BY VSD MANUFACTURER

No.	REVISION DETAILS	DWN	DATE
1	REISSUED FOR TENDER	RK	16.04.21
0	ISSUED FOR CONSTRUCTION	VP	27.10.16

CONSULTANT DETAILS:
GHD
57 Graham Street Nowra NSW 2541
T 61 2 4424 4900 F 61 2 4424 4999
E noamail@ghd.com W www.ghd.com

CONSULTANT REFERENCE No. 23-1426651

Shoalhaven Water
A Group of Shoalhaven City Council

DESIGNED: CP	DATE: 02.2016	COMPANY: GHD	
DRAWN: KT	DATE: 02.2016	COMPANY: GHD	
CHECKED: DB	DATE: 10.2016	COMPANY: GHD	
APPROVED: CS	DATE: 11.2016	COMPANY: GHD	

TITLE:
SHOALHAVEN WATER
LYREBIRD PARK NOWRA SPS2 UPGRADE
ELECTRICAL SERVICES
CABLE SHEDULE
SHEET 1 OF 3

SIZE	SCALE	INDEX No.	DRAWING No.	SHEET	REV No.
A1	N.T.S.		23-24356	291	1

CABLE No.	TO - FROM	CONDUIT SIZE AND TYPE	APPROX. LENGTH (m)	CONDUIT ID/ ROUTING (NOTE 1)	TYPE AND SIZE OF CABLE	VOLTAGE GRADE kV	CURRENT RATING & DERATING FACTORS TO AS 3008.1	VOLTAGE DROP FROM POA TO EQUIPMENT TO AS 3008.1	MAXIMUM CIRCUIT LENGTH FOR CORRECT OPERATION AGAINST INDIRECT CONTACT FAULT-LOOP IMPEDANCE	CIRCUIT DIAGRAM N°	TERMINATION DRAWING No
C001											
C002	SCA TO PE CELL	CABLE TRAY	10 m	N/A	3c + E 1.5 mm² PVC/PVC	0.6/1.0 kV	NONE	N/A	N/A	254	N/A
C003	SCA TO ALARM BEACON	CABLE TRAY	10 m	N/A	2c + E 1.5 mm² PVC/PVC	0.6/1.0 kV	NONE	N/A	N/A	261	302.1
C101	SCA TO PUMP N°1 VSD	CABLE TRAY	10 m	N/A	6c + E 1.5 mm² PVC/PVC	0.6/1.0 kV	NONE	N/A	N/A	259	301 304
C102	SCA TO PUMP N°1	100mm HD - UPVC	25 m	13	12c 1.5 mm² PVC/PVC PROPRIETARY		NONE	N/A	N/A	257	
C201	SCA TO PUMP N°2 VSD	CABLE TRAY	10 m	N/A	6c + E 1.5 mm² PVC/PVC	0.6/1.0 kV	NONE	N/A	N/A	259	303 305
C202	SCA TO PUMP N°2	100 mm HD - UPVC	25 m	13	12c 1.5 mm² PVC/PVC PROPRIETARY					257	
J001	SCA TO WET WELL LEVEL TRANSMITTER LT1	100 mm HD - UPVC	15 m	16	1pr + Sc 1.5mm²	N/A	NONE	N/A	N/A	252,263	302.4
J002											
J003	SCA TO WET WELL LEVEL (BFL) REGULATOR S8	100 mm HD - UPVC	15 m	16	3c PROPRIETARY	N/A	NONE	N/A	N/A	252,264	302.1
J004											
J005	SCA TO WET WELL LEVEL (TFL) REGULATOR S6	100 mm HD - UPVC	15 m	16	3c PROPRIETARY	N/A	NONE	N/A	N/A	252,264	302.1
J006	RTU TO WET WELL LEVEL (EXTRA HIGH) REGULATOR S71	100 mm HD - UPVC	15 m	16	3c PROPRIETARY	N/A	NONE	N/A	N/A	252,264	302.1
J007	SCA TO SWITCHROOM TEMPERATURE TRANSMITTER TT1	CABLE TRAY	10 m	N/A	1pr + Sc 1.5mm²	N/A	NONE	N/A	N/A	252,263	302.4
J008	RTU TO WET WELL LEVEL (OVERFLOW) REGULATOR S70	100 mm HD - UPVC	15 m	16	3c PROPRIETARY	N/A	NONE	N/A	N/A	252,255	306
J009											
J010											
J011	SCA TO SWITCHROOM SUB-FLOOR DOOR N°3	CABLE TRAY	10 m	N/A	1pr + Sc 1.5 mm²		NONE	N/A	N/A	264	302.1
J012	RTU TO EMERGENCY STORAGE TANK LEVEL TRANSMITTTER S73	80 mm HD - UPVC	20 m	5	1pr + Sc 1.5 mm²	N/A	NONE	N/A	N/A	252,255	306
J013	WELL-WASHER ELECTRIC SOLENOID	50 mm HD - UPVC	20 m	18	2c + E 1.5 mm² PVC	0.6/1.0 kV	NONE	N/A	N/A	261	
J014	SCA TO PUMP No.1 VSD	CABLE TRAY	10 m	N/A	CAT 6 ETHERNET	N/A	NONE	N/A	100 m	257,262	N/A
J015	SCA TO PUMP No.2 VSD	CABLE TRAY	10 m	N/A	CAT 6 ETHERNET	N/A	NONE	N/A	100 m	257,262	N/A

NOTES

1 REFER TO ELECTRICAL SERVICES LAYOUT DRAWING 275 FOR CONDUIT LAYOUT AND ID/ROUTING DETAILS

No.	REVISION DETAILS	DWN	DATE
1	REISSUED FOR TENDER	RK	16.04.21
0	ISSUED FOR CONSTRUCTION	VP	27.10.16

CONSULTANT DETAILS:
GHD
57 Graham Street Nowra NSW 2541
T 61 2 4424 4900 F 61 2 4424 4999
E noamail@ghd.com W www.ghd.com

CONSULTANT REFERENCE No. 23-1426651

Shoalhaven Water
A Group of Shoalhaven City Council

DESIGNED: CP	DATE: 02.2016	COMPANY: GHD	
DRAWN: KT	DATE: 02.2016	COMPANY: GHD	
CHECKED: DB	DATE: 10.2016	COMPANY: GHD	
APPROVED: CS	DATE: 11.2016	COMPANY: GHD	

TITLE:
SHOALHAVEN WATER
LYREBIRD PARK NOWRA SPS2 UPGRADE
ELECTRICAL SERVICES
CABLE SHEDULE
SHEET 2 OF 3

SIZE	SCALE	INDEX No.	DRAWING No.	SHEET	REV No.
A1	N.T.S.		23-24356	292	1

Plot Date: 15/04/21 - 20:27 Cad File: C:\CAD\temp\AcPublish_842032\23-24356-292.dwg

CABLE N°	TO - FROM	CONDUIT SIZE AND TYPE	APPROX. LENGTH (m)	CONDUIT ID/ ROUTING (NOTE 1)	TYPE AND SIZE OF CABLE	VOLTAGE GRADE kV	CURRENT RATING & DERATING FACTORS TO AS 3008.1	VOLTAGE DROP FROM POA TO EQUIPMENT TO AS 3008.1	MAXIMUM CIRCUIT LENGTH FOR CORRECT OPERATION AGAINST INDIRECT CONTACT FAULT-LOOP IMPEDANCE	CIRCUIT DIAGRAM N°	TERMINATION DRAWING No
J016	TELEMETRY RTU TO SECURITY ALARM SIREN	CABLE TRAY	10 m	N/A	1pr + Sc 1.5 mm² PVC		NONE	N/A	N/A	255	306
J017	TELEMETRY RTU TO SCA	CABLE TRAY	10 m	N/A	CAT6 ETHERNET		NONE	N/A	N/A	255,262	306
J018	SCA TO SWITCHROOM THERMOSTAT	CABLE TRAY	10 m	N/A	1pr + Sc 1.5 mm² PVC		NONE	N/A	N/A	264	302.1
J019	SCA TO SWITCHROOM DOOR N°1A	CABLE TRAY	10 m	N/A	1pr + Sc 1.5 mm² PVC		NONE	N/A	N/A	264	302.1
J020	SCA TO SWITCHROOM DOOR N°1B	CABLE TRAY	10 m	N/A	1pr + Sc 1.5 mm² PVC		NONE	N/A	N/A	264	302.1
J021	SCA TO SWITCHROOM DOOR N°2	CABLE TRAY	10 m	N/A	1pr + Sc 1.5 mm² PVC		NONE	N/A	N/A	264	302.1
J022	SCA TO EXTERNAL KEY SWITCH	CABLE TRAY	10 m	N/A	1pr + Sc 1.5 mm² PVC		NONE	N/A	N/A	264	302.1
J102	SCA TO PUMP N°1 NO FLOW LIMIT SWITCH	50mm HD-UPVC	30 m	6,21	1pr + Sc 1.5 mm² PVC/PVC	0.6/1.0 kV	NONE	N/A	N/A	252,257	301
J105	SCA TO PUMP N°1 VSD	CABLE TRAY	10 m	N/A	4pr + Sc 1.5 mm² PVC/PVC	0.6/1.0 kV	NONE	N/A	N/A	252,257	301,304
J106	SCA TO PUMP N°1 VSD	CABLE TRAY	10 m	N/A	2pr + Sc 1.5 mm² PVC/PVC	0.6/1.0 kV	NONE	N/A	N/A	259,267,268	302.4,304
J202	SCA TO PUMP N°2 NO FLOW LIMIT SWITCH	50mm HD-UPVC	30 m	6,21	1pr + Sc 1.5 mm² PVC/PVC	0.6/1.0 kV	NONE	N/A	N/A	252,257	303
J205	SCA TO PUMP N°2 VSD	CABLE TRAY	10 m	N/A	4pr + Sc 1.5 mm² PVC/PVC	0.6/1.0 kV	NONE	N/A	N/A	252,257	303,305

NOTES

1 REFER TO ELECTRICAL SERVICES LAYOUT DRAWING 275 FOR CONDUIT LAYOUT AND ID/ROUTING DETAILS

No.	REVISION DETAILS	DWN	DATE
1	REISSUED FOR TENDER	RK	16.04.21
0	ISSUED FOR CONSTRUCTION	VP	27.10.16

CONSULTANT DETAILS:
GHD
57 Graham Street Nowra NSW 2541
T 61 2 4424 4900 F 61 2 4424 4999
E noamail@ghd.com W www.ghd.com

CONSULTANT REFERENCE No. 23-1426651

Shoalhaven Water
A Group of Shoalhaven City Council

DESIGNED: CP	DATE: 02.2016	COMPANY: GHD	
DRAWN: KT	DATE: 02.2016	COMPANY: GHD	
CHECKED: DB	DATE: 10.2016	COMPANY: GHD	
APPROVED: CS	DATE: 11.2016	COMPANY: GHD	

TITLE:
SHOALHAVEN WATER
LYREBIRD PARK NOWRA SPS2 UPGRADE
ELECTRICAL SERVICES
CABLE SHEDULE
SHEET 3 OF 3

SIZE	SCALE	INDEX No.	DRAWING No.	SHEET	REV No.
A1	N.T.S.		23-24356	293	1

Plot Date: 15/04/21 - 20:27 Cad File: C:\CAD\temp\AcPublish_842032\23-24356-293.dwg

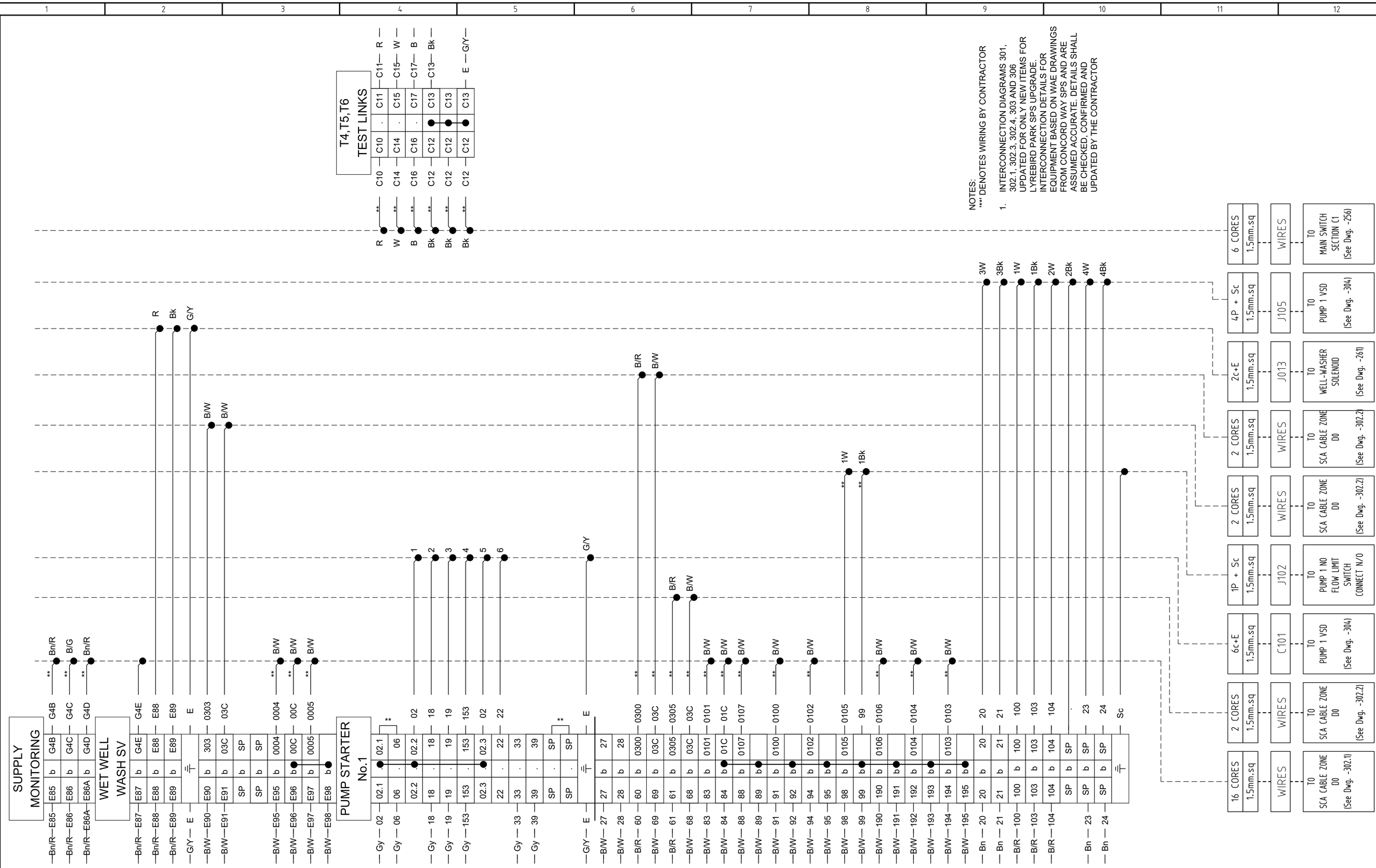

No.	REVISION DETAILS	DWN	DATE
1	REISSUED FOR TENDER	RK	16.04.21
0	ISSUED FOR CONSTRUCTION	VP	27.10.16

CONSULTANT DETAILS:
GHD
57 Graham Street Nowra NSW 2541
T 61 2 4424 4900 F 61 2 4424 4999
E noamail@ghd.com W www.ghd.com

CONSULTANT REFERENCE No. 23-1426651

Shoalhaven Water
A Group of Shoalhaven City Council

DESIGNED: CP	DATE: 02.2016	COMPANY: GHD	
DRAWN: KT	DATE: 02.2016	COMPANY: GHD	
CHECKED: DB	DATE: 10.2016	COMPANY: GHD	
APPROVED: CS	DATE: 11.2016	COMPANY: GHD	

TITLE:
SHOALHAVEN WATER
LYREBIRD PARK NOWRA SPS2 UPGRADE
ELECTRICAL SERVICES
SCA CABLE ZONE B0
INTERCONNECTION DIAGRAM

SIZE	SCALE	INDEX No.	DRAWING No.	SHEET	REV No.
A1	N.T.S.		23-24356	301	1

Plot Date: 15/04/21 - 20:27 Cad File: C:\CAD\temp\AcPublish_842032\23-24356-301.dwg

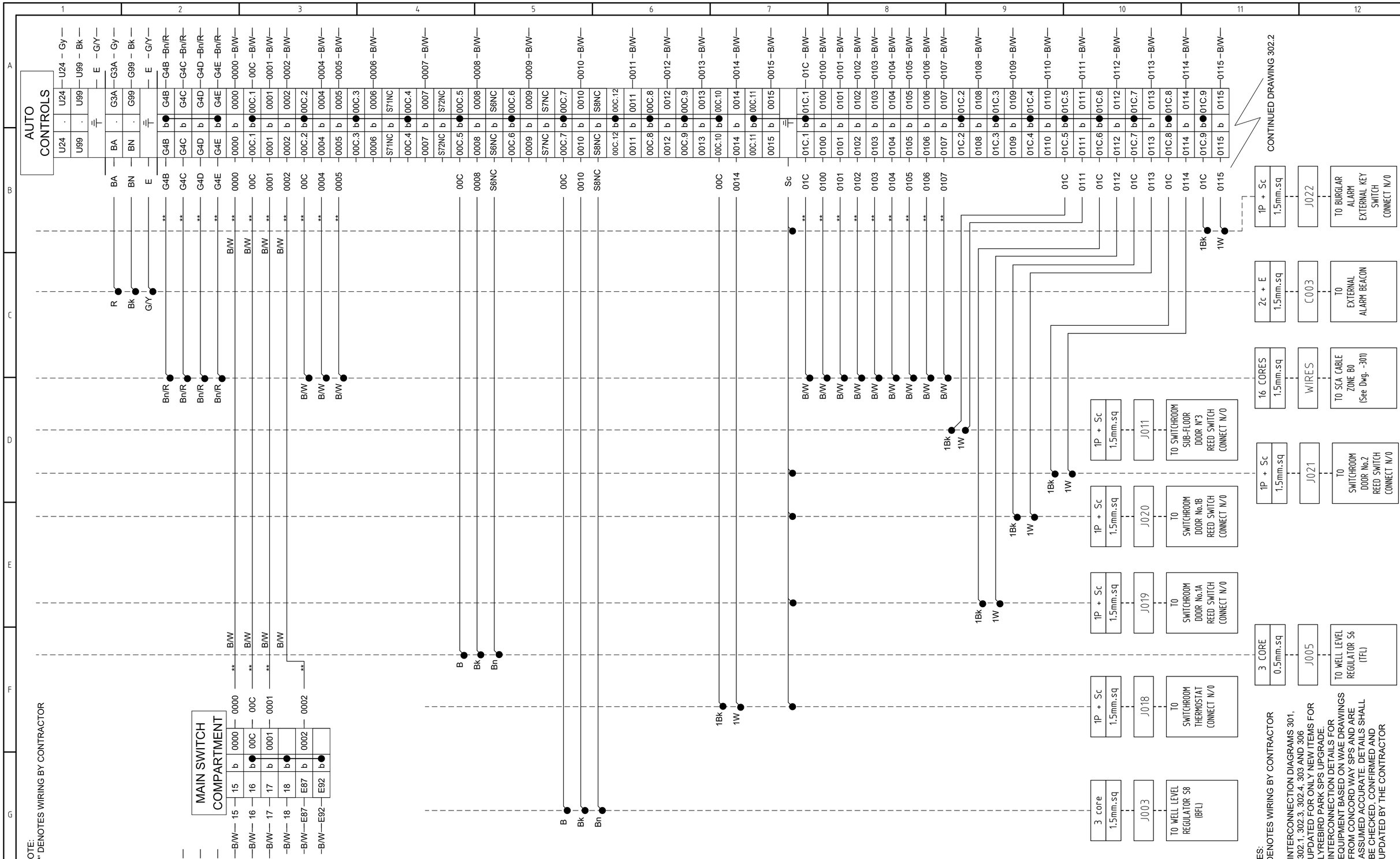

No.	REVISION DETAILS	DWN	DATE
1	REISSUED FOR TENDER	RK	16.04.21
0	ISSUED FOR CONSTRUCTION	VP	27.10.16

CONSULTANT DETAILS:
GHD
57 Graham Street Nowra NSW 2541
T 61 2 4424 4900 F 61 2 4424 4999
E noamail@ghd.com W www.ghd.com

CONSULTANT REFERENCE No.
23-1426651

Shoalhaven Water
A Group of Shoalhaven City Council

DESIGNED: CP	DATE: 02.2016	COMPANY: GHD	
DRAWN: KT	DATE: 02.2016	COMPANY: GHD	
CHECKED: DB	DATE: 10.2016	COMPANY: GHD	
APPROVED: CS	DATE: 11.2016	COMPANY: GHD	

TITLE:
SHOALHAVEN WATER
LYREBIRD PARK NOWRA SPS2 UPGRADE
ELECTRICAL SERVICES
SCA CABLE ZONE D0
INTERCONNECTION DIAGRAM (1 OF 4)

SIZE:	SCALE:	INDEX No.	DRAWING No.	SHEET	REV No.
A1	N.T.S.		23-24356	302.1	1

FROM DRAWING 302.1

| | | |

FROM DRAWING 302.2

04C	0400	04C	0401	04C	0402	04C	0403	04C	0404	04C	0405	04C	0406	04C	0407	04C	0408	04C	0409	04C	0410	04C	0411
04C.1 b	0400 b	04C.2 b	0401 b	04C.3 b	0402 b	04C.4 b	0403 b	04C.5 b	0404 b	04C.6 b	0405 b	04C.7 b	0406 b	04C.8 b	0407 b	04C.9 b	0408 b	04C.10 b	0409 b	04C.11 b	0410 b	04C.12 b	0411 b
04C – B/W	0400 – B/R	04C.2 – B/R	0401 – B/R	04C.3 – B/R	0402 – B/R	04C.4 – B/R	0403 – B/R	04C.5 – B/R	0404 – B/R	04C.6 – B/R	0405 – B/R	04C.7 – B/R	0406 – B/R	04C.8 – B/R	0407 – B/R	04C.9 – B/R	0408 – B/R	04C.10 – B/R	0409 – B/R	04C.11 – B/R	0410 – B/R	04C.12 – B/R	0411 – B/R

X4-5	X4-6	04C	0400	04C	0401	04C	0402	04C	0403	04C	0404	04C	0405	04C	0406	04C	0407	04C	0408	04C	0409	04C	0410
X4-5 b	X4-6 b	04C.1 b	0400 b	04C.2 b	0401 b	04C.3 b	0402 b	04C.4 b	0403 b	04C.5 b	0404 b	04C.6 b	0405 b	04C.7 b	0406 b	04C.8 b	0407 b	04C.9 b	0408 b	04C.10 b	0409 b	04C.11 b	0410 b
11 – V	12 – V	04C – B/W	0400 – B/R	04C.2 – B/R	0401 – B/R	04C.3 – B/R	0402 – B/R	04C.4 – B/R	0403 – B/R	04C.5 – B/R	0404 – B/R	04C.6 – B/R	0405 – B/R	04C.7 – B/R	0406 – B/R	04C.8 – B/R	0407 – B/R	04C.9 – B/R	0408 – B/R	04C.10 – B/R	0409 – B/R	04C.11 – B/R	0410 – B/R

CONTINUED DRAWING 302.4

NOTES:
"**" DENOTES WIRING BY CONTRACTOR

1. INTERCONNECTION DIAGRAMS 301, 302.1, 302.3, 302.4, 303 AND 306 UPDATED FOR ONLY NEW ITEMS FOR LYREBIRD PARK SPS UPGRADE. INTERCONNECTION DETAILS FOR EQUIPMENT BASED ON WAE DRAWINGS FROM CONCORD WAY SPS AND ARE ASSUMED ACCURATE. DETAILS SHALL BE CHECKED, CONFIRMED AND UPDATED BY THE CONTRACTOR

2 CORES 1.5mm.sq	WIRES	TO SCA CABLE ZONE B0 (See Dwg. -303)	B/W, B/R
4 CORES 1.5mm.sq	WIRES	TO TELEMETRY RTU (See Dwg. -306)	Pu, Pu
2 CORES 1.5mm.sq	WIRES	TO SCA CABLE ZONE D0 DB TERMINALS (See Dwg. -303)	B/W, B/R
2 CORES 1.5mm.sq	WIRES	TO SCA CABLE ZONE G0 (See Dwg. -303)	B/W, B/R

No.	REVISION DETAILS	DWN	DATE
1	REISSUED FOR TENDER	RK	16.04.21
0	ISSUED FOR CONSTRUCTION	VP	27.10.16

CONSULTANT DETAILS:
GHD
57 Graham Street Nowra NSW 2541
T 61 2 4424 4900 F 61 2 4424 4999
E noamail@ghd.com W www.ghd.com

CONSULTANT REFERENCE No. 23-1426651

Shoalhaven Water
A Group of Shoalhaven City Council

DESIGNED: CP	DATE: 02.2016	COMPANY: GHD	
DRAWN: KT	DATE: 02.2016	COMPANY: GHD	
CHECKED: DB	DATE: 10.2016	COMPANY: GHD	
APPROVED: CS	DATE: 11.2016	COMPANY: GHD	

TITLE:
SHOALHAVEN WATER
LYREBIRD PARK NOWRA SPS2 UPGRADE
ELECTRICAL SERVICES
SCA CABLE ZONE D0
INTERCONNECTION DIAGRAM (3 OF 4)

SIZE	SCALE	INDEX No.	DRAWING No.	SHEET	REV No.
A1	N.T.S.		23-24356	302.3	1

Plot Date: 15/04/21 - 20:28 Cad File: C:\CAD\temp\AcPublish_842032\23-24356-302-3.dwg

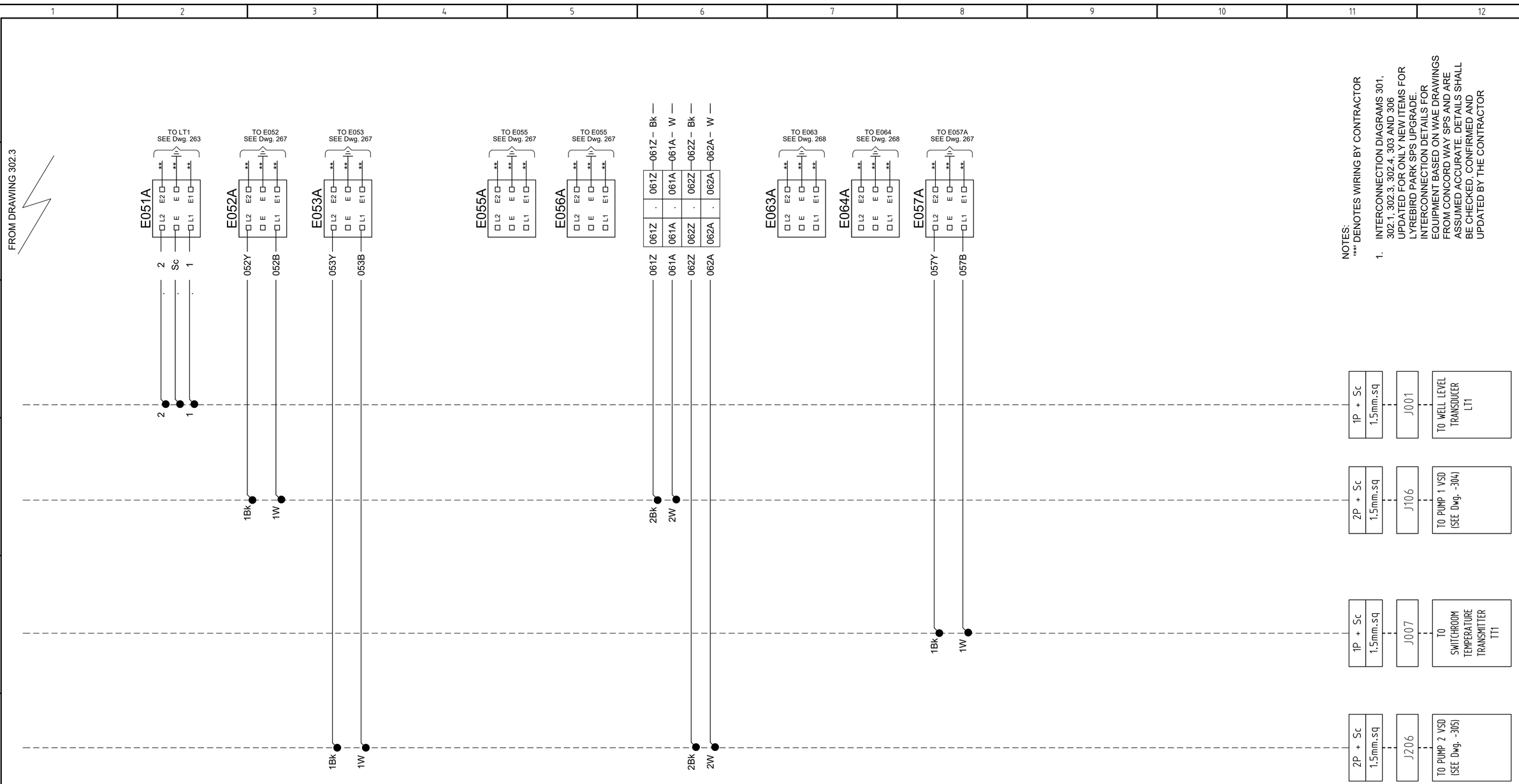

NOTES:
"**" DENOTES WIRING BY CONTRACTOR

1. INTERCONNECTION DIAGRAMS 301, 302.1, 302.3, 302.4, 303 AND 306 UPDATED FOR ONLY NEW ITEMS FOR LYREBIRD PARK SPS UPGRADE. INTERCONNECTION DETAILS FOR EQUIPMENT BASED ON WAE DRAWINGS FROM CONCORD WAY SPS AND ARE ASSUMED ACCURATE. DETAILS SHALL BE CHECKED, CONFIRMED AND UPDATED BY THE CONTRACTOR

No.	REVISION DETAILS	DWN	DATE
1	REISSUED FOR TENDER	RK	16.04.21
0	ISSUED FOR CONSTRUCTION	VP	27.10.16

CONSULTANT DETAILS:
GHD
57 Graham Street Nowra NSW 2541
T 61 2 4424 4900 F 61 2 4424 4999
E noamail@ghd.com W www.ghd.com

CONSULTANT REFERENCE No.
23-1426651

Shoalhaven Water
A Group of Shoalhaven City Council

DESIGNED: CP	DATE: 02.2016	COMPANY: GHD	
DRAWN: KT	DATE: 02.2016	COMPANY: GHD	
CHECKED: DB	DATE: 10.2016	COMPANY: GHD	
APPROVED: CS	DATE: 11.2016	COMPANY: GHD	

TITLE:
SHOALHAVEN WATER
LYREBIRD PARK NOWRA SPS2 UPGRADE
ELECTRICAL SERVICES
SCA CABLE ZONE D0
INTERCONNECTION DIAGRAM (4 OF 4)

SIZE	SCALE	INDEX No.	DRAWING No.	SHEET	REV No.
A1	N.T.S.		23-24356	302.4	1

Plot Date: 15/04/21 - 20:28 Cad File: C:\CAD\temp\AcPublish_842032\23-24356-302-4.dwg

NOTES:
"**" DENOTES WIRING BY CONTRACTOR

1. INTERCONNECTION DIAGRAMS 301, 302.1, 302.3, 302.4, 303 AND 306 UPDATED FOR ONLY NEW ITEMS FOR LYREBIRD PARK SPS UPGRADE. INTERCONNECTION DETAILS FOR EQUIPMENT BASED ON WAE DRAWINGS FROM CONCORD WAY SPS AND ARE ASSUMED ACCURATE. DETAILS SHALL BE CHECKED, CONFIRMED AND UPDATED BY THE CONTRACTOR

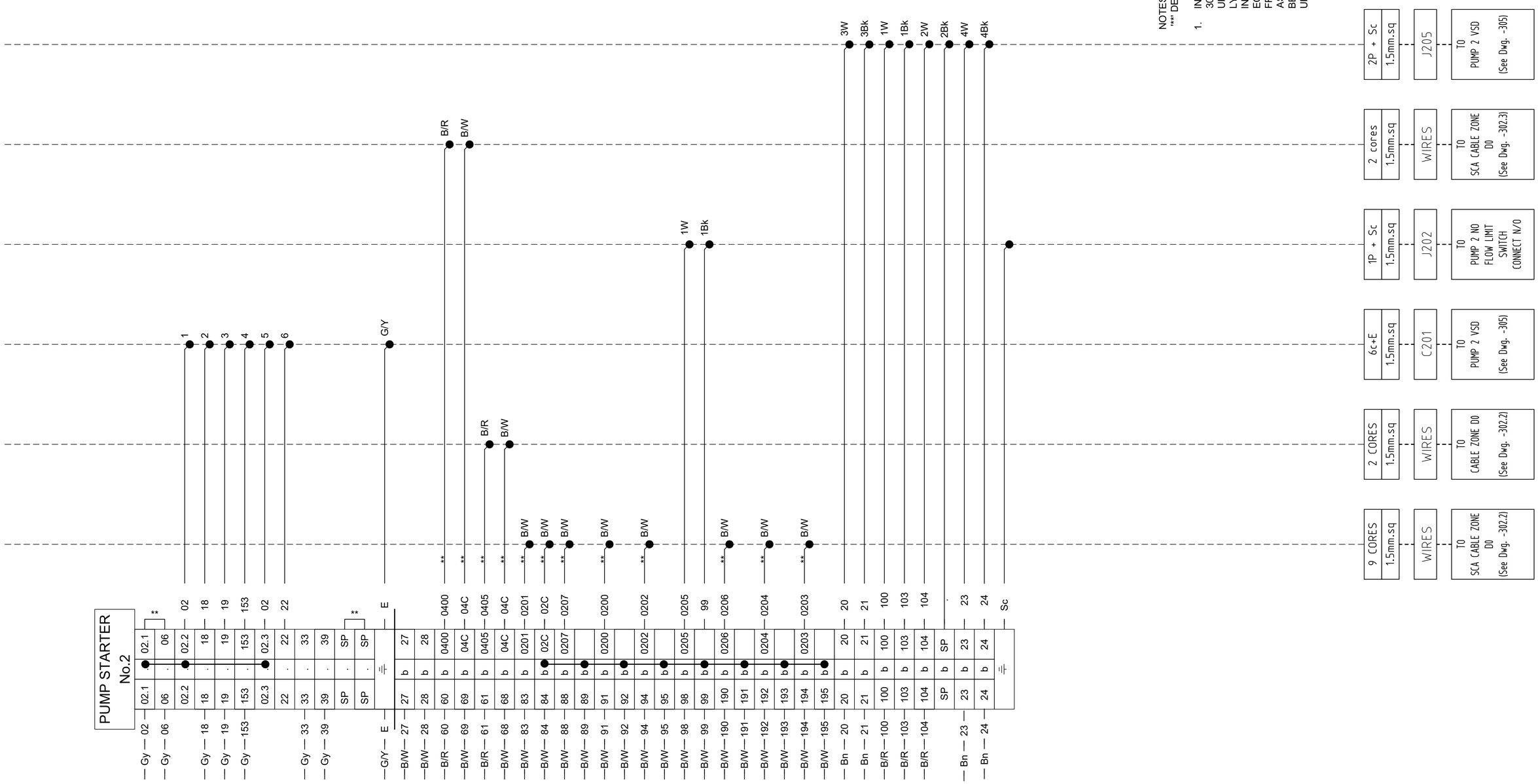

No.	REVISION DETAILS	DWN	DATE
1	REISSUED FOR TENDER	RK	16.04.21
0	ISSUED FOR CONSTRUCTION	VP	27.10.16

CONSULTANT DETAILS:
GHD
57 Graham Street Nowra NSW 2541
T 61 2 4424 4900 F 61 2 4424 4999
E noamail@ghd.com W www.ghd.com

CONSULTANT REFERENCE No. 23-1426651

Shoalhaven Water
A Group of Shoalhaven City Council

DESIGNED: CP	DATE: 02.2016	COMPANY: GHD	
DRAWN: KT	DATE: 02.2016	COMPANY: GHD	
CHECKED: DB	DATE: 10.2016	COMPANY: GHD	
APPROVED: CS	DATE: 11.2016	COMPANY: GHD	

TITLE:
SHOALHAVEN WATER
LYREBIRD PARK NOWRA SPS2 UPGRADE
ELECTRICAL SERVICES
SCA CABLE ZONE G0
INTERCONNECTION DIAGRAM

SIZE	SCALE	INDEX No.	DRAWING No.	SHEET	REV No.
A1	N.T.S.		23-24356	303	1

NOTES:

1 CONTROL CORES T1 TO T4 ARE INDICATIVE. FINAL NUMBER TO BE DETERMINED ONCE PUMP PROTECTION REQUIREMENTS ARE DEFINED.

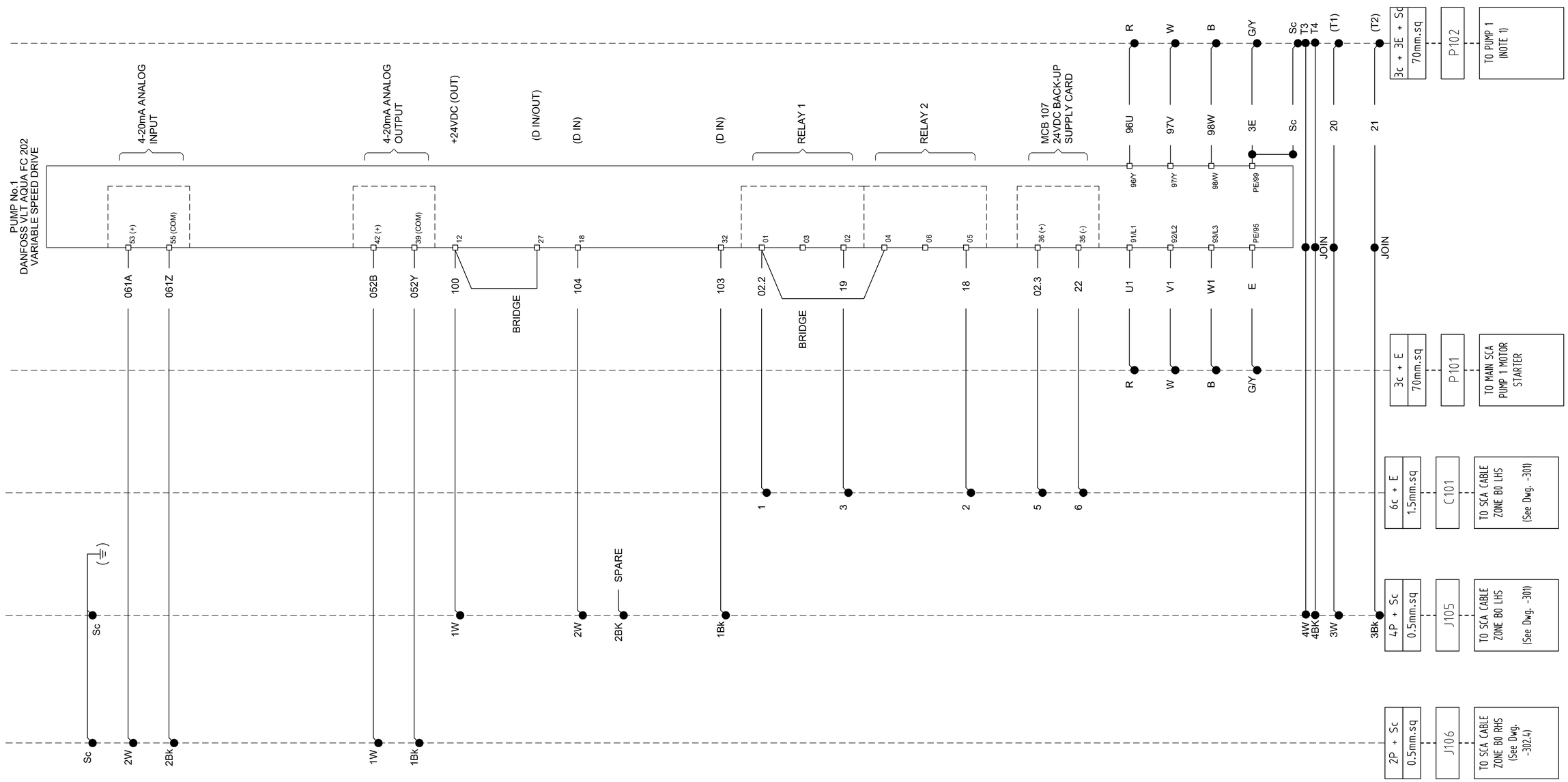

No.	REVISION DETAILS	DWN	DATE
1	REISSUED FOR TENDER	RK	16.04.21
0	ISSUED FOR CONSTRUCTION	VP	27.10.16

CONSULTANT DETAILS:
GHD
57 Graham Street Nowra NSW 2541
T 61 2 4424 4900 F 61 2 4424 4999
E noamail@ghd.com W www.ghd.com

CONSULTANT REFERENCE No. 23-1426651

Shoalhaven Water
A Group of Shoalhaven City Council

DESIGNED: CP	DATE: 02.2016	COMPANY: GHD	
DRAWN: KT	DATE: 02.2016	COMPANY: GHD	
CHECKED: DB	DATE: 10.2016	COMPANY: GHD	
APPROVED: CS	DATE: 11.2016	COMPANY: GHD	

TITLE:
SHOALHAVEN WATER
LYREBIRD PARK NOWRA SPS2 UPGRADE
ELECTRICAL SERVICES
PUMP No. 1 VSD
INTERCONNECTION DIAGRAM

SIZE:	SCALE:	INDEX No.	DRAWING No.	SHEET	REV No.
A1	N.T.S.		23-24356	304	1

NOTES:

1 CONTROL CORES T1 TO T4 ARE INDICATIVE. FINAL NUMBER TO BE DETERMINED ONCE PUMP PROTECTION REQUIREMENTS ARE DEFINED.

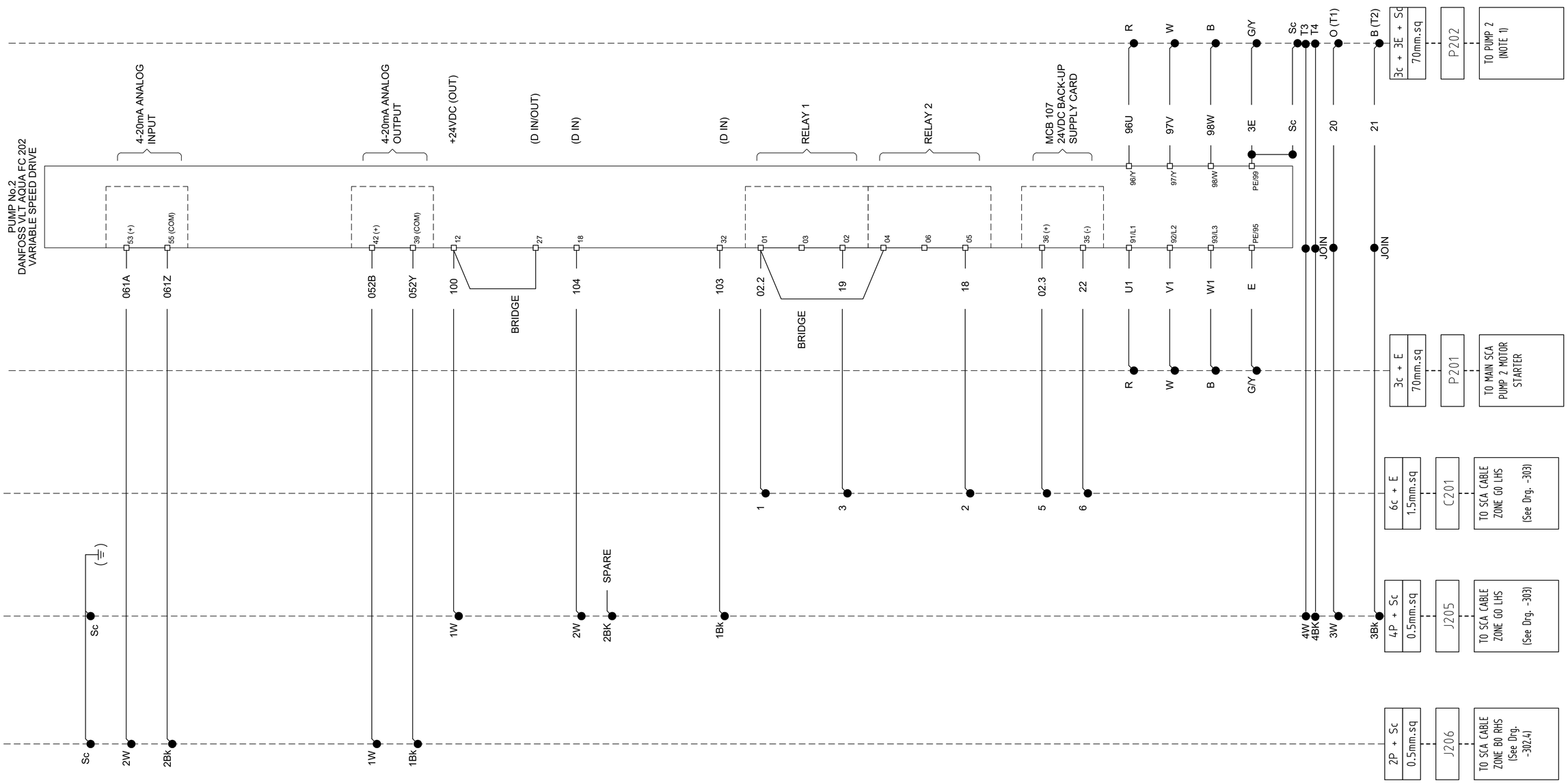

No.	REVISION DETAILS	DWN	DATE
1	REISSUED FOR TENDER	RK	16.04.21
0	ISSUED FOR CONSTRUCTION	VP	27.10.16

CONSULTANT DETAILS:
GHD
57 Graham Street Nowra NSW 2541
T 61 2 4424 4900 F 61 2 4424 4999
E noamail@ghd.com W www.ghd.com

CONSULTANT REFERENCE No. 23-1426651

Shoalhaven Water
A Group of Shoalhaven City Council

DESIGNED: CP	DATE: 02.2016	COMPANY: GHD	
DRAWN: KT	DATE: 02.2016	COMPANY: GHD	
CHECKED: DB	DATE: 10.2016	COMPANY: GHD	
APPROVED: CS	DATE: 11.2016	COMPANY: GHD	

TITLE:
SHOALHAVEN WATER
LYREBIRD PARK NOWRA SPS2 UPGRADE
ELECTRICAL SERVICES
PUMP No. 2 VSD
INTERCONNECTION DIAGRAM

SIZE:	SCALE:	INDEX No.	DRAWING No.	SHEET	REV No.
A1	N.T.S.		23-24356	305	1

Plot Date: 15/04/21 - 20:29 Cad File: C:\CAD\temp\AcPublish_842032\23-24356-305.dwg

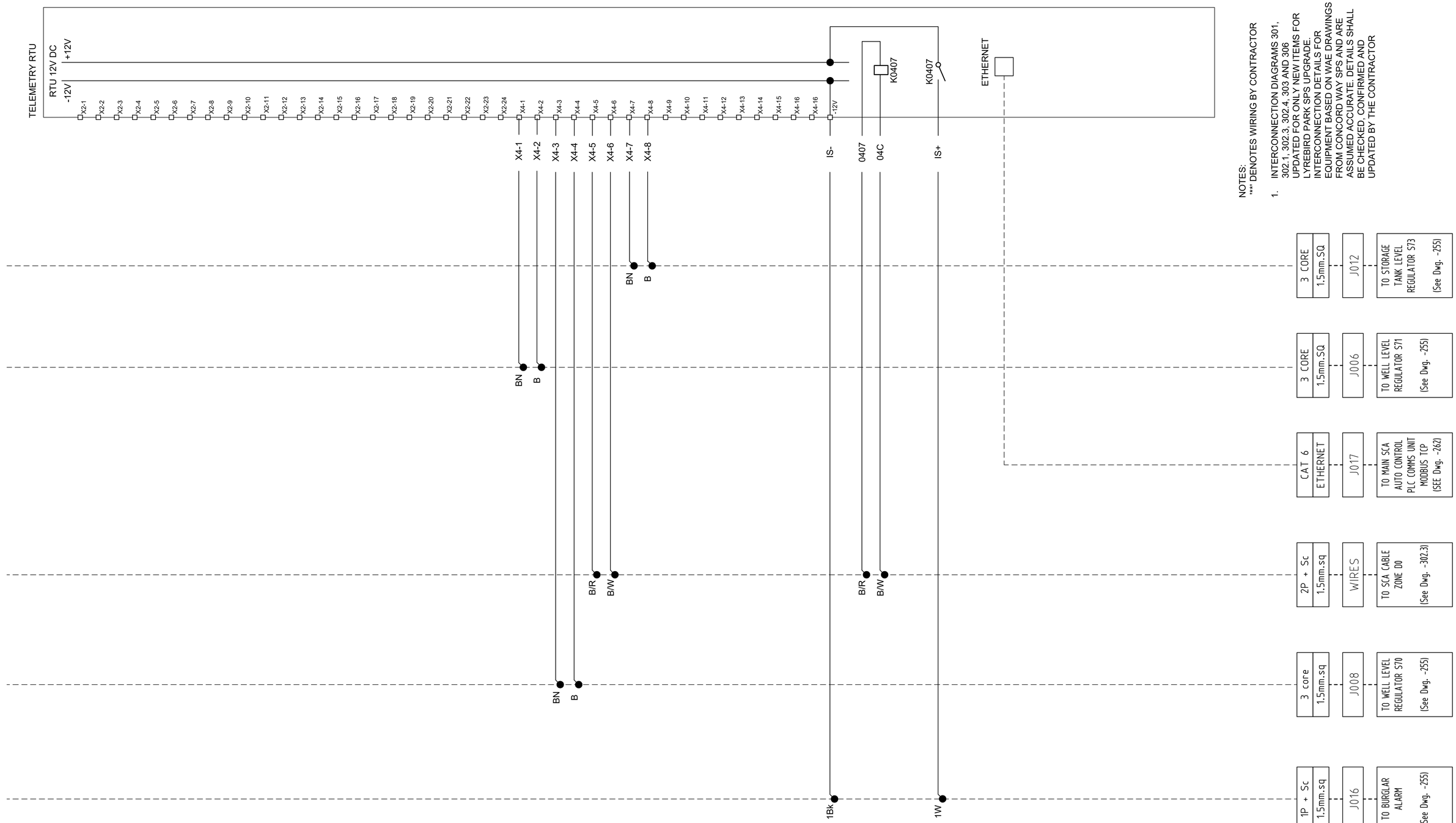

NOTES:
'***' DENOTES WIRING BY CONTRACTOR

1. INTERCONNECTION DIAGRAMS 301, 302.1, 302.3, 302.4, 303 AND 306 UPDATED FOR ONLY NEW ITEMS FOR LYREBIRD PARK SPS UPGRADE. INTERCONNECTION DETAILS FOR EQUIPMENT BASED ON WAE DRAWINGS FROM CONCORD WAY SPS AND ARE ASSUMED ACCURATE. DETAILS SHALL BE CHECKED, CONFIRMED AND UPDATED BY THE CONTRACTOR

No.	REVISION DETAILS	DWN	DATE
1	REISSUED FOR TENDER	RK	16.04.21
0	ISSUED FOR CONSTRUCTION	VP	27.10.16

CONSULTANT DETAILS:
GHD
57 Graham Street Nowra NSW 2541
T 61 2 4424 4900 F 61 2 4424 4999
E noamail@ghd.com W www.ghd.com

CONSULTANT REFERENCE No.
23-1426651

Shoalhaven Water
A Group of Shoalhaven City Council

DESIGNED: CP	DATE: 02.2016	COMPANY: GHD	
DRAWN: KT	DATE: 02.2016	COMPANY: GHD	
CHECKED: DB	DATE: 10.2016	COMPANY: GHD	
APPROVED: CS	DATE: 11.2016	COMPANY: GHD	

TITLE:
SHOALHAVEN WATER
LYREBIRD PARK NOWRA SPS2 UPGRADE
ELECTRICAL SERVICES
TELEMETRY RTU
INTERCONNECTION DIAGRAM

SIZE	SCALE	INDEX No.	DRAWING No.	SHEET	REV No.
A1	N.T.S.		23-24356	306	1

Plot Date: 15/04/21 - 20:30 Cad File: C:\CAD\temp\AcPublish_842032\23-24356-306.dwg

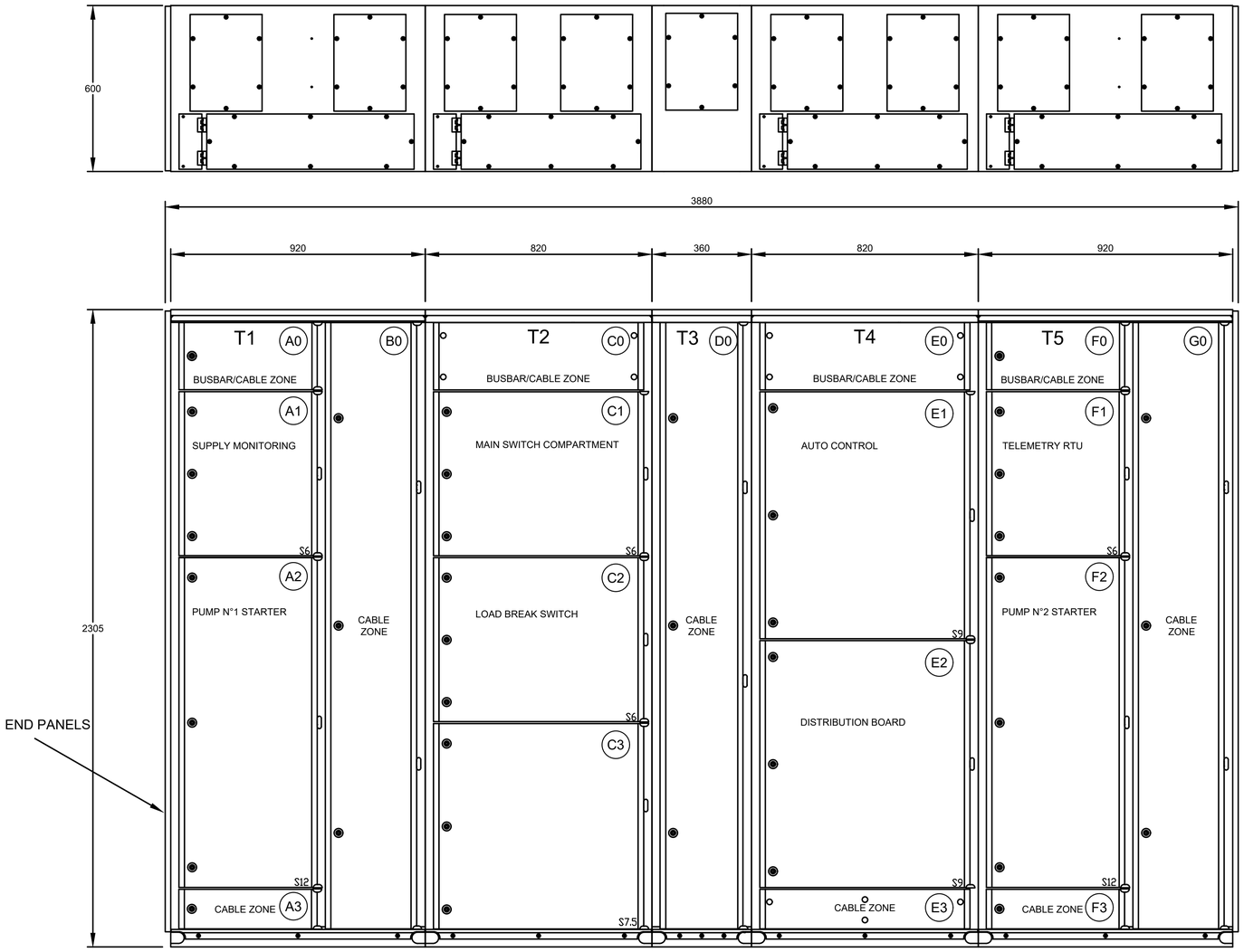

NOTES

1 THE SCA SHALL HAVE A DEGREE OF PROTECTION OF IP54.

2 SCA TO BE CONSTRUCTED FROM 2mm ZINCANNEAL STEEL. EXTERNAL COLOUR TO BE X15 ORANGE.

3 ALL COMPARTMENTS SHALL BE FITTED WITH DOORS. THE MAIN SWITCHES, MOTOR STARTER ISOLATOR, SUBMAIN CONTROL ETC SHALL BE INTERLOCKED WITH THE COMPARTMENT DOORS SUCH THAT THE DOORS CANNOT BE OPENED OR CLOSED UNLESS THE SWITCH IS IN THE "OFF" POSITION.

4 THE SCA SHALL BE CONSTRUCTED SUCH THAT IT CAN BE EASILY TRANSPORTED WITHOUT DAMAGE TO EQUIPMENT PANELS AND FINISH. PROVIDE LIFTING SUPPORTS AS REQUIRED FOR THE INSTALLATION OF THE SCA.

5 SCA PLINTH TO BE HEAVY DUTY GALVANISED

6 SPARE

7 SPARE

8 ALL CABLE ENTRIES SHALL BE VIA THE BOTTOM OF THE SCA THROUGH THE CABLE ZONES. SEWAGE PUMP CABLES MAY ENTRY DIRECTLY INTO THE PUMP STARTER COMPARTMENTS.

9 THE CABLE ZONES SHALL BE SIZED TO SUIT THE CABLES INDICATED ON THE DRAWINGS. ADEQUATE SPACE SHALL BE PROVIDED FOR SPARE COMPARTMENTS.

10 ANTI-CONDENSATION HEATERS SHALL BE INSTALLED IN EACH CABLE ZONE.

11 SCA GENERAL ARRANGEMENT TYPICAL ONLY. CONTRACTOR SHALL TAKE RESPONSIBILITY OF OVERALL DESIGN AND LAYOUT TO ENSURE PRINCIPAL'S REQUIREMENTS ARE MET.

12 SCA TO HAVE PROVISION FOR ADDITIONAL TIER FOR FUTURE PUMP STARTER. CONTRACTOR TO ENSURE SCA CAN BE MODIFIED IN-SITU TO ALLOW ADDITIONAL TIER ON EITHER LEFT HAND OR RIGHT HAND SIDE.

FRONT VIEW

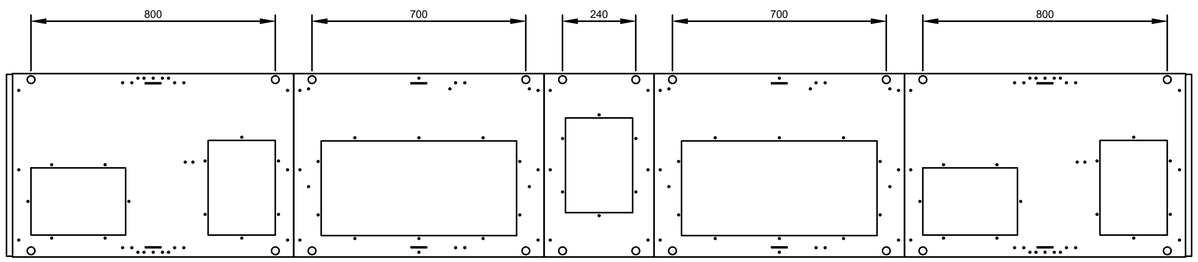

0 0.1 0.2 0.3 0.4 0.5m
SCALE 1:10 AT ORIGINAL SIZE

No.	REVISION DETAILS	DWN	DATE
1	REISSUED FOR TENDER	RK	16.04.21
0	ISSUED FOR CONSTRUCTION	VP	27.10.16

CONSULTANT DETAILS:
GHD
57 Graham Street Nowra NSW 2541
T 61 2 4424 4900 F 61 2 4424 4999
E noamail@ghd.com W www.ghd.com

CONSULTANT REFERENCE No.
23-1426651

Shoalhaven Water
A Group of Shoalhaven City Council

DESIGNED: CP	DATE: 02.2016	COMPANY: GHD	
DRAWN: KT	DATE: 02.2016	COMPANY: GHD	
CHECKED: DB	DATE: 10.2016	COMPANY: GHD	
APPROVED: CS	DATE: 11.2016	COMPANY: GHD	

TITLE:
SHOALHAVEN WATER
LYREBIRD PARK NOWRA SPS2 UPGRADE
ELECTRICAL SERVICES
TYPICAL PUMPING STATION B3 SCA
GENERAL ARRANGEMENT

SIZE	SCALE	INDEX No.	DRAWING No.	SHEET	REV No.
A1	1:10m		23-24356	311	1

Plot Date: 15/04/21 - 20:30 Cad File: C:\CAD\temp\AcPublish_842032\23-24356-311.dwg

NOTES

1 REFER TO NOTES 11 AND 12 ON DWG 311

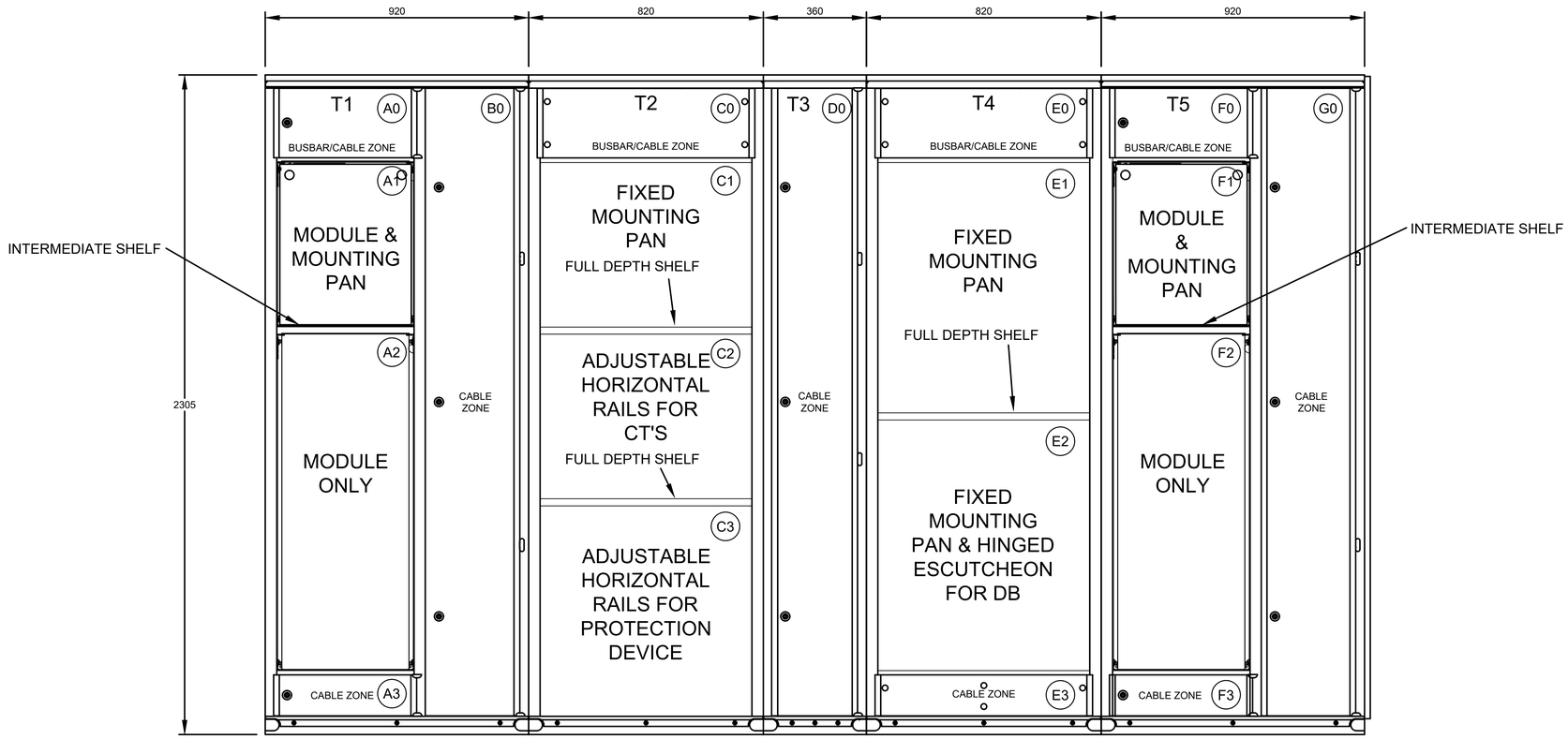

0 0.1 0.2 0.3 0.4 0.5m
SCALE 1:10 AT ORIGINAL SIZE

No.	REVISION DETAILS	DWN	DATE
1	REISSUED FOR TENDER	RK	16.04.21
0	ISSUED FOR CONSTRUCTION	VP	27.10.16

CONSULTANT DETAILS:
GHD
57 Graham Street Nowra NSW 2541
T 61 2 4424 4900 F 61 2 4424 4999
E noamail@ghd.com W www.ghd.com

CONSULTANT REFERENCE No. 23-1426651

Shoalhaven Water
A Group of Shoalhaven City Council

DESIGNED: CP	DATE: 02.2016	COMPANY: GHD	
DRAWN: KT	DATE: 02.2016	COMPANY: GHD	
CHECKED: DB	DATE: 10.2016	COMPANY: GHD	
APPROVED: CS	DATE: 11.2016	COMPANY: GHD	

TITLE:
SHOALHAVEN WATER
LYREBIRD PARK NOWRA SPS2 UPGRADE
ELECTRICAL SERVICES
TYPICAL PUMPING STATION B3 SCA
GENERAL ARRANGEMENT - NO DOORS

SIZE	SCALE	INDEX No.	DRAWING No.	SHEET	REV No.
A1	1:10m		23-24356	312	1

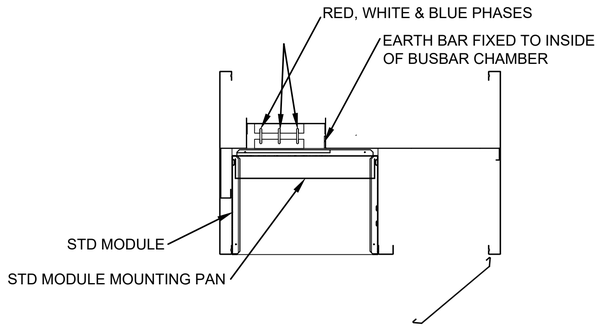

NOTE

1 REFER TO NOTES 11 AND 12 ON DWG 311

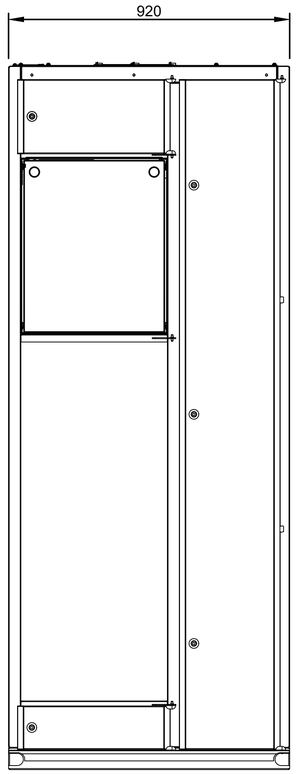

TYPICAL TIER 1 & T5

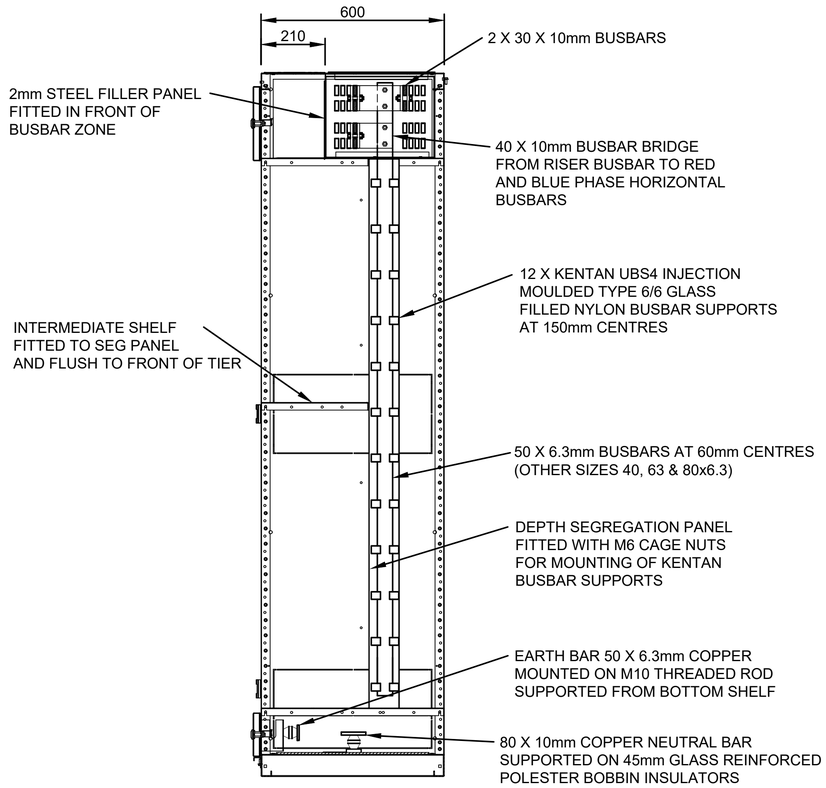

0 0.1 0.2 0.3 0.4 0.5m
SCALE 1:10 AT ORIGINAL SIZE

No.	REVISION DETAILS	DWN	DATE
1	REISSUED FOR TENDER	RK	16.04.21
0	ISSUED FOR CONSTRUCTION	VP	27.10.16

CONSULTANT DETAILS:
GHD
57 Graham Street Nowra NSW 2541
T 61 2 4424 4900 F 61 2 4424 4999
E noamail@ghd.com W www.ghd.com

CONSULTANT REFERENCE No.
23-1426651

Shoalhaven Water
A Group of Shoalhaven City Council

DESIGNED: CP	DATE: 02.2016	COMPANY: GHD	
DRAWN: KT	DATE: 02.2016	COMPANY: GHD	
CHECKED: DB	DATE: 10.2016	COMPANY: GHD	
APPROVED: CS	DATE: 11.2016	COMPANY: GHD	

TITLE:
SHOALHAVEN WATER
LYREBIRD PARK NOWRA SPS2 UPGRADE
ELECTRICAL SERVICES
TYPICAL PUMPING STATION B3 SCA
SECTIONS

SIZE	SCALE	INDEX No.	DRAWING No.	SHEET	REV No.
A1	1:10m		23-24356	313	1

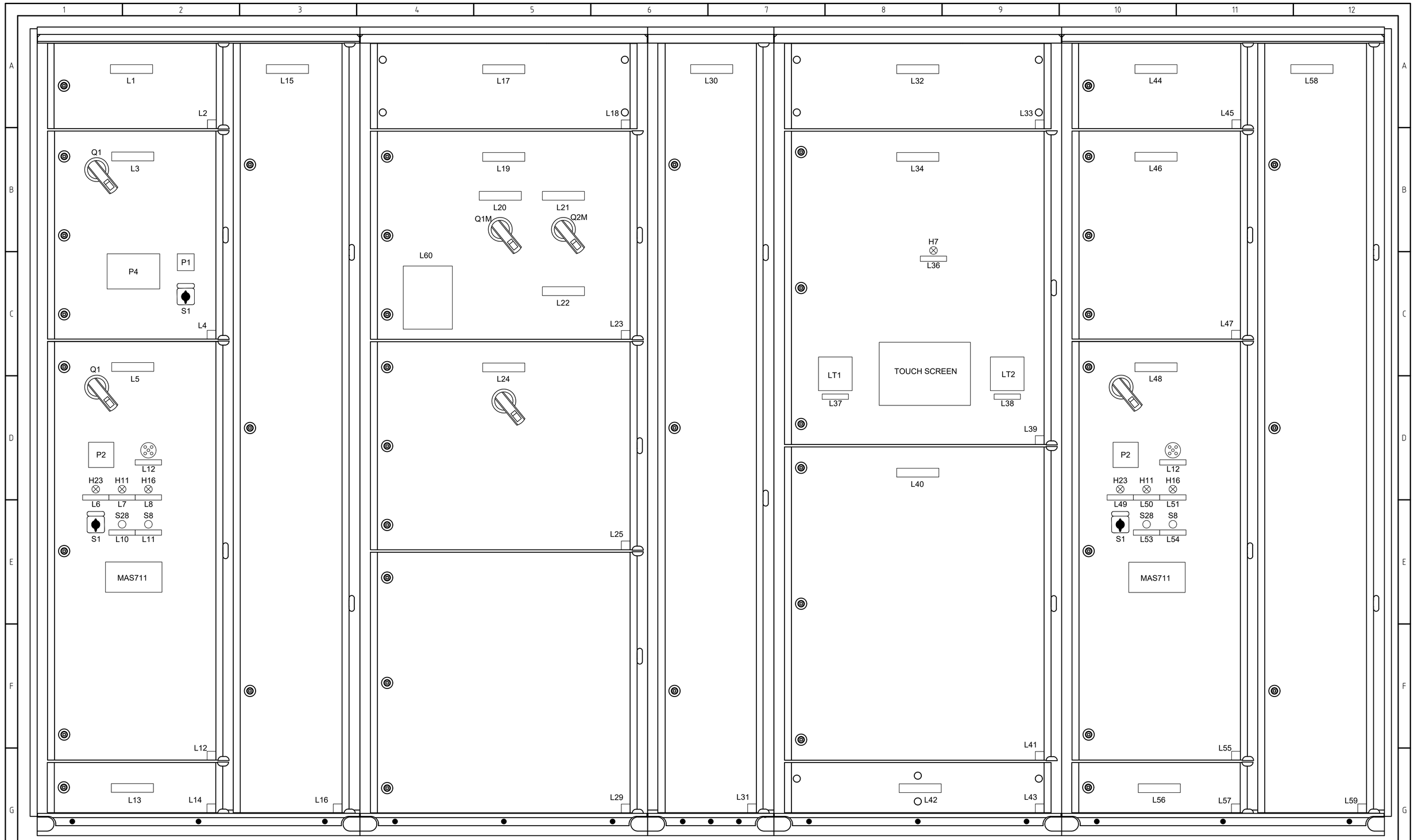

0 0.05 0.1 0.15 0.2 0.25m

SCALE 1:5 AT ORIGINAL SIZE

NOTE

1 REFER TO NOTES 11 AND 12 ON DWG 311

No.	REVISION DETAILS	DWN	DATE
1	REISSUED FOR TENDER	RK	16.04.21
0	ISSUED FOR CONSTRUCTION	VP	27.10.16

CONSULTANT DETAILS:
GHD
57 Graham Street Nowra NSW 2541
T 61 2 4424 4900 F 61 2 4424 4999
E noamail@ghd.com W www.ghd.com

CONSULTANT REFERENCE No.
23-1426651

Shoalhaven Water
A Group of Shoalhaven City Council

DESIGNED: CP	DATE: 02.2016	COMPANY: GHD	
DRAWN: KT	DATE: 02.2016	COMPANY: GHD	
CHECKED: DB	DATE: 10.2016	COMPANY: GHD	
APPROVED: CS	DATE: 11.2016	COMPANY: GHD	

TITLE:
SHOALHAVEN WATER
LYREBIRD PARK NOWRA SPS2 UPGRADE
ELECTRICAL SERVICES
TYPICAL PUMPING STATION B3 SCA
EQUIPMENT LAYOUT - EXTERNAL

SIZE	SCALE	INDEX No.	DRAWING No.	SHEET	REV No.
A1	1:5m		23-24356	314	1

Plot Date: 15/04/21 - 20:31 Cad File: C:\CAD\temp\AcPublish_842032\23-24356-314.dwg

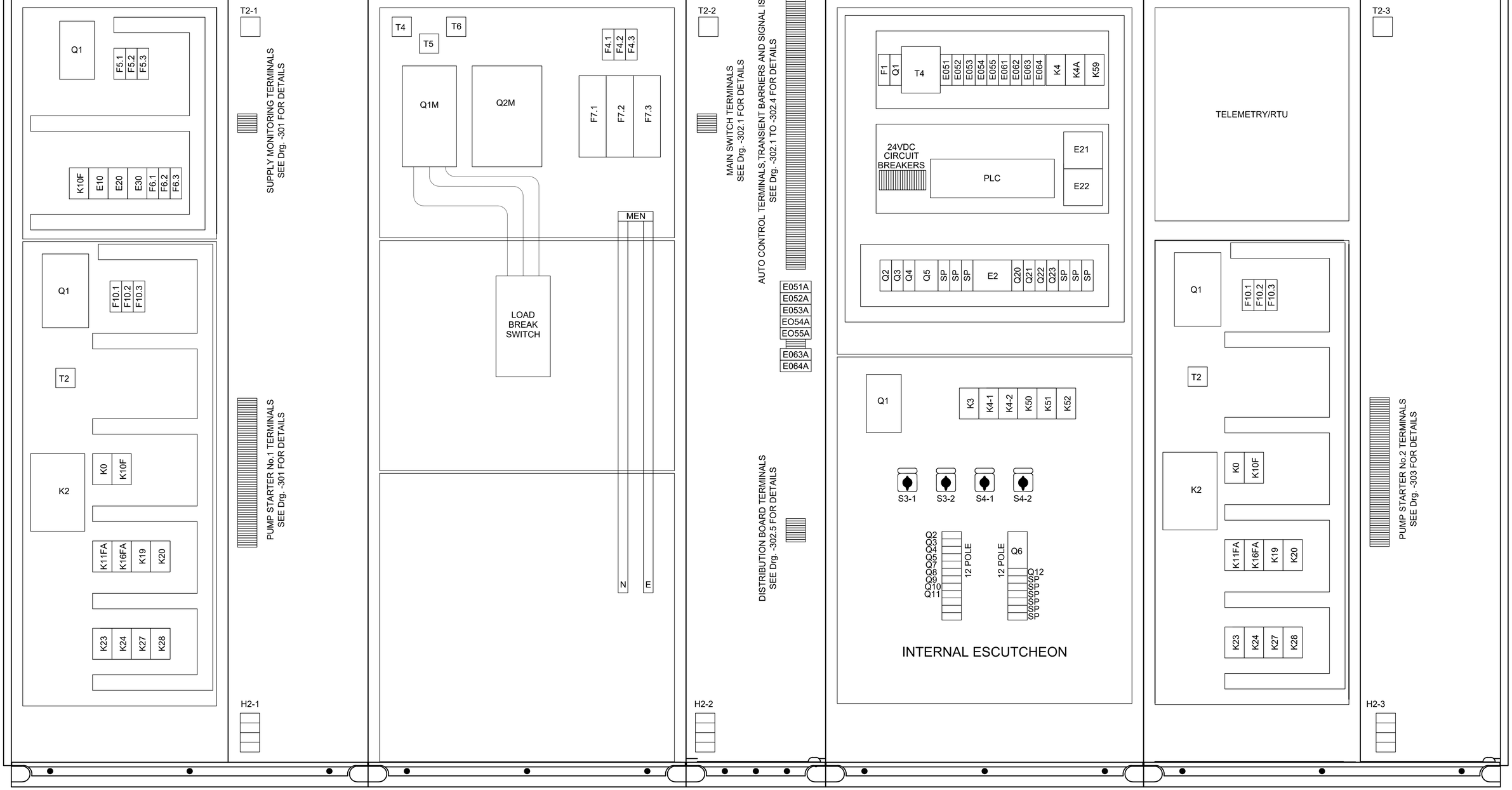

0 0.05 0.1 0.15 0.2 0.25m

SCALE 1:5 AT ORIGINAL SIZE

NOTES

1 REFER TO NOTES 11 AND 12 ON DWG 311

2 LAYOUT AND EQUIPMENT LOCATIONS ARE TYPICAL. THE CONTRACTOR SHALL BE RESPONSIBLE FOR FINAL EQUIPMENT SELECTION AND LAYOUT

No.	REVISION DETAILS	DWN	DATE
1	REISSUED FOR TENDER	RK	16.04.21
0	ISSUED FOR CONSTRUCTION	VP	27.10.16

CONSULTANT DETAILS:
GHD
57 Graham Street Nowra NSW 2541
T 61 2 4424 4900 F 61 2 4424 4999
E noamail@ghd.com W www.ghd.com

CONSULTANT REFERENCE No. 23-1426651

Shoalhaven Water
A Group of Shoalhaven City Council

DESIGNED: CP	DATE: 02.2016	COMPANY: GHD	
DRAWN: KT	DATE: 02.2016	COMPANY: GHD	
CHECKED: DB	DATE: 10.2016	COMPANY: GHD	
APPROVED: CS	DATE: 11.2016	COMPANY: GHD	

TITLE:
SHOALHAVEN WATER
LYREBIRD PARK NOWRA SPS2 UPGRADE
ELECTRICAL SERVICES
TYPICAL PUMPING STATION B3 SCA
EQUIPMENT LAYOUT - INTERNAL

SIZE	SCALE	INDEX No.	DRAWING No.	SHEET	REV No.
A1	1:5m		23-24356	315	1

Plot Date: 15/04/21 - 20:31 Cad File: C:\CAD\temp\AcPublish_842032\23-24356-315.dwg

ITEM No	EQUIPMENT DESCRIPTION	RATING	DESIGNATION	MAKE (NOTE3)	TYPE OR CATALOGUE No.	REMARKS	MOUNT (note1)	QTY	LABEL DETAILS NOTE 2	LABEL DETAILS
	SUPPLY MONITORING COMPARTMENT									
1	Circuit Breaker	20A	Q1	TERASAKI	S125NJ320		I	1	D	Q1
2	Circuit Breaker	6A	F5.1,F5.2,F5.3	TERASAKI	DTCB10106		I	3	D	F5.1,F5.2,F5.3
3	Transient Barrier	275V	E10,E20,E30	CRITEC	DSF6A-275		I	3	D	E10,E20,E30
4	Selector Switch	20A	S1	KRAUS & NAIMER	CA10 A292		D	1	D	S1
5	Fuse	1A	F6.1,F6.2,F6.3	IPD	SC01H		I	1	D	PHASE SEQUENCE CONTROL OFF ON
6	Phase Sequence Indicator	415V	P1	CROMPTON	243-12PG		D	1	D	P1
7	Phase Failure Relay	415V	K10F	CARLO GAVAZZI	DP1302CM48		I	1	D	K10F
8	Power Monitor		P4	SCHNEIDER	PM700P		D	1	D	P4
	PUMP 1 STARTER COMPARTMENT									
9	Circuit Breaker	250A	Q1	TERASAKI	S250PE3250		I	1	D	Q1
10	Circuit Breaker	6A	F10.1,F10.2,F10.3	TERASAKI	DTCB10106C		I	3	D	F10.1,F10.2,F10.3
11							I	1	D	F40
12							I	1	D	F20
13	Current Transformer	250/5	T2	IME	TAxxx		I	1	D	T2
14	Ammeter	250/5	P2	CROMPTON	243-xxx		D	1	D	P2
15	Contactor	132kW	K2	SPRECHER + SCHUH	CA6-xxx		I	1	D	K2
16	Pump Monitoring Relay		P4	FLYGT MAS711	A0501141		I	1	D	K16F
17	Pump Monitoring Indicator		P4	FLYGT MAS711	A0501140		I	1	D	K11F
18	Phase Failure Relay	415V	K10F	CARLO GAVAZZI	DP1302CM48		I	1	D	K10F
19							I	1	D	K6T
20							I	1	D	K15F
21	Auto Relay	24VDC	K0	FINDER	60.12		I	1	D	K0
22							I	1	D	T4
23							I	1	D	K23M
24	Relay	240VAC	K19	SPRECHER + SCHUH	CS4 - 40		I	1	D	K19
25							I	1	D	K16A
26	Relay	240VAC	K8, K11FA, K16FA, K20 K23, K24, K27, K28	SPRECHER + SCHUH	CS4 - 31		I	7	D	K8, K11FA, K16FA, K20 K23, K24, K27, K28
27	Pushbutton	10A	S8	MOELLER	M22 DS 40		D	1	D	S8
28	Pushbutton	10A	S28	MOELLER	M22 DB 30		D	1	D	S28
29	Indicating Light	240VAC	H11, H23	MOELLER	M22 LH R		D	3	D	H11,H23
30	Indicating Light	240VAC	H16	MOELLER	M22 LH Y		D	1	D	H16
31	Selector Switch	20A	S1	KRAUS & NAIMER	CA10		D	1	D A	S1 PUMP CONTROL ON S/DOWN OFF INST S/DOWN PLC
32	Fused Terminals	2A		WEIDMULLER	W SERIES		I		E	
	SERVICE PROTECTION DEVICE									
32A	Load Break Switch	400A	Load Break				I/D	1	D	LOAD BREAK SWITCH

NOTES

1. EQUIPMENT MOUNTING:
   D-DOOR OR FRONT PANEL
   ES-ESCUTCHEON
   I-INTERNAL
   SL-SUPPLIED LOOSE

2. INSCRIPTION ON:
   A-ESCUTCHEON
   B-LENS
   C-PUSHBUTTON
   D-TRAFFOLYTE LABEL
   E-TERMINAL

3. EQUIPMENT MAY BE SIMILAR OR EQUAL TO THAT STATED. EQUIPMENT SHOWN IS TYPICAL AND MAY NOT REFLECT REQUIREMENTS AS DETAILED IN THE ELECTRICAL SCHEMATICS. THE CONTRACTOR SHALL BE RESPONSIBLE FOR FINAL EQUIPMENT SELECTION AND SIZE/RATING, ENSURING CIRCUIT DISCRIMINATION IS INLINE WITH AS3000 REQUIREMENTS

4. ALL LABELS TO BE UPPER CASE LETTERS WITH HEIGHTS IN ACCORDANCE WITH MEW E101

5. ANTI-CONDENSATION HEATER REQUIRED WHEN SHOWN ON SINGLE LINE DIAGRAM

6. FAULT CURRENT LIMITING USING SUITABLE CIRCUIT BREAKER COMBINATIONS ACCEPTABLE.

No.	REVISION DETAILS	DWN	DATE
1	REISSUED FOR TENDER	RK	16.04.21
0	ISSUED FOR CONSTRUCTION	VP	27.10.16

CONSULTANT DETAILS:
GHD
57 Graham Street Nowra NSW 2541
T 61 2 4424 4900 F 61 2 4424 4999
E noamail@ghd.com W www.ghd.com

CONSULTANT REFERENCE No. 23-1426651

Shoalhaven Water
A Group of Shoalhaven City Council

		DATE	COMPANY
DESIGNED:	CP	02.2016	GHD
DRAWN:	KT	02.2016	GHD
CHECKED:	DB	10.2016	GHD
APPROVED:	CS	11.2016	GHD

TITLE:
SHOALHAVEN WATER
LYREBIRD PARK NOWRA SPS2 UPGRADE
ELECTRICAL SERVICES
TYPICAL PUMPING STATION B3
EQUIPMENT SCHEDULE (1 OF 3)

SIZE:	SCALE:	INDEX No.	DRAWING No.	SHEET	REV No.
A1	N.T.S.		23-24356	316.1	1

Plot Date: 15/04/21 - 20:32 Cad File: C:\CAD\temp\AcPublish_842032\23-24356-316-1.dwg

ITEM No	EQUIPMENT DESCRIPTION	RATING	DESIGNATION	MAKE (NOTE3)	TYPE OR CATALOGUE No.	REMARKS	MOUNT (note1)	QTY	LABEL DETAILS NOTE 2	LABEL DETAILS
	CABLE ZONES									
33	Terminals			WEIDMULLER	W SERIES		I		E	See Drg. 0602585-500 SERIES
34	Thermostat	6A	T2-1,T2-2,T2-3	STEGO	KT001140		I	3	D	T2-1,T2-2,T2-3
35	Anti - Condensation Heaters	60W	H2-1,H2-2,H2-3	STEGO	HC-14005		I	3	D	H2-1,H2-2,H2-3
36	Transient Barriers	36V	E052A,E053A E063A,E064A	CRITEC	UTB-36		I	4	D	E052A,E053A E063A,E064A
37	Transient Barriers	36V	E051A,E054A	VEGA	B62-36G		I	2	D	E051A,E054A
38	Signal Isolators	4-20mA	E051 - 55 E061 - 64	OMNIFLEX	LPR		I	9	D	E051 - 55 E061 - 64
	MAIN SWITCH COMPARTMENT									
39	Main Switch - Normal Supply	400A	Q1M	TERASAKI	S400NE3400		I/D	1	D	Q1M
40	Main Switch - Generator Supply	400A	Q2M	TERASAKI	S400NJ4400		I/D	1	D	Q2M
41	Surge Diverter Fuse	63A	F4.1,F4.2,F4.3	IPD	ES63H	ES63 FUSE	I	3	D	F4.1,F4.2,F4.3
42	Surge Diverter	120kA	F7.1,F7.2,F7.3	NOVARIS	SD3-120		I	3	D	F7.1,F7.2,F7.3
43	Current Transformers	200/5	T4,T5,T6	IME	TA200		I	3	D	T4,T5,T6
	CT COMPARTMENT									
44	Supply Authority Metering Current Transformers	200/5	T1,T2,T3	ENERGY CONTROLS	TYPE 'S'		I	3	D	T1,T2,T3
45	Potential Fuses	20A	F1,F2,F3	IPD	SC20H	NS10 FUSE	I	3	D	F1,F2,F3
	AUTO CONTROL COMPARTMENT									
46	Circuit Breaker	20A	Q1	TERASAKI	DTCB6120C		I	1	D	Q1
47	Circuit Breaker	10A	Q2	TERASAKI	DTCB6110C		I	1	D	Q2
48	Circuit Breaker	6A	Q3,Q4,Q20,Q21,Q22,Q23	TERASAKI	DTCB6106C		I	6	D	Q3,Q4,Q20,Q21,Q22,Q23
49	Circuit Breaker	16A	Q5	TERASAKI	DTCB6116C		I	1	D	Q5
50	Fault Current Limiter Fuse	63A	F1	IPD	SC63H	ES63 FUSE	I	1	D	F1
51	Surge Filter	240VAC	E2	NOVARIS	SF110DIN		I	1	D	E2
52	Power Supply	10A	E21	OMRON	S8VS2402413		I	1	D	E21
53	PLC			OMRON	CJ2		I	1		
53A	Power Supply			OMRON	PA205R		I	1		
53B	CPU			OMRON CJ2	CPU33		I	1		
53C	Communication Module			OMRON	SCU21-V1		I	1		
53D	16pt Digital Input Module			OMRON	ID211		I	1		
53E	16pt Digital Output Module			OMRON	OC211		I	1		
53F	4pt Analog Input Module			OMRON	AD081-V1		I	1		
53G	4pt Analog Output Module			OMRON	DA041		I	1		
54	Touch Screen			OMRON	NB10		D	1		
55	Level Transmitter		LT1	VEGA	VEGAMET391		D	1	D	LT1
56	Fused Terminals	2A		WEIDMULLER	W SERIES		I		E	
57	Relay	24VAC	K4,K4A	FINDER	60.12		I	2	D	K4,K4A
58	Relay	24VDC	K59	FINDER	60.12		I	1	D	K59
59	Transformer	24VAC	T4	SCHNEIDER	ABL6TS04B		I	1	D	T4
60	Temperature Transmitter	24VAC	TT1				I	1	D	TT1
61	Indicating Light	240VDC	H7	MOELLER	M22 LH R		D	1	D	H7

NOTE

REFER NOTES 1 TO 6 ON DWG 316.1

No.	REVISION DETAILS	DWN	DATE
1	REISSUED FOR TENDER	RK	16.04.21
0	ISSUED FOR CONSTRUCTION	VP	27.10.16

CONSULTANT DETAILS:
GHD
57 Graham Street Nowra NSW 2541
T 61 2 4424 4900 F 61 2 4424 4999
E noamail@ghd.com W www.ghd.com

CONSULTANT REFERENCE No. 23-1426651

Shoalhaven Water
A Group of Shoalhaven City Council

DESIGNED: CP	DATE: 02.2016	COMPANY: GHD	
DRAWN: KT	DATE: 02.2016	COMPANY: GHD	
CHECKED: DB	DATE: 10.2016	COMPANY: GHD	
APPROVED: CS	DATE: 11.2016	COMPANY: GHD	

TITLE:
SHOALHAVEN WATER
LYREBIRD PARK NOWRA SPS2 UPGRADE
ELECTRICAL SERVICES
TYPICAL PUMPING STATION B3
EQUIPMENT SCHEDULE (2 OF 3)

SIZE	SCALE	INDEX No.	DRAWING No.	SHEET	REV No.
A1	N.T.S.		23-24356	316.2	1

Plot Date: 15/04/21 - 20:18 Cad File: C:\CAD\temp\AcPublish_842032\23-24356-316-2.dwg

ITEM No	EQUIPMENT DESCRIPTION	RATING	DESIGNATION	MAKE (NOTE3)	TYPE OR CATALOGUE No.	REMARKS	MOUNT (note1)	QTY	LABEL DETAILS NOTE 2	LABEL DETAILS
	DISTRIBUTION BOARD COMPARTMENT									
62	Circuit Breaker	50A	Q1	TERASAKI	S125NJ350		ES	1		
63	Circuit Breaker	10A	Q2,Q3,Q4	TERASAKI	DSRCBH1030A		ES	3		
64	Circuit Breaker	16A	Q5,Q8	TERASAKI	DSRCBH1630A		ES	3		
65	Circuit Breaker	20A	Q6	TERASAKI	DTCB10320C + DSRCM-32-30-3PN		ES	1		
66	Selector Switch	20A	S3-1, S3-2	KRAUS & NAIMER	CA10 A210		ES	1	D	S3-1, S3-2
67	Circuit Breaker	20A	Q7	TERASAKI	DTCB10120C		ES	1	A	VENTILATION FAN ON OFF PLC
68	Selector Switch	20A	S4 - 1	KRAUS & NAIMER	CA10 A210		ES	1	D A	S4-1 AREA LIGHTING ON OFF PLC
69	Selector Switch	20A	S4 - 2	KRAUS & NAIMER	CA10 A210		ES	1	D A	S4-2 MAINTENANCE LIGHTING ON OFF PLC
70	Relay	24VDC	K50,K51,K52	FINDER	60.12		I	3	D	K50,K51,K52
71	Contactor	16A	K3,K4-1,K4-2	SPRECHER + SCHUH	CA7-16		I	3	D	K3,K4-1,K4-2
	PUMP 2 STARTER COMPARTMENT									
72	Circuit Breaker	250A	Q1	TERASAKI	S250PE3250		I	1	D	Q1
73	Circuit Breaker	6A	F10.1,F10.2,F10.3	TERASAKI	DTCB10106C		I	3	D	F10.1,F10.2,F10.3
74							I	1	D	F40
75							I	1	D	F20
76	Current Transformer	250/5	T2	IME	TAxxx		I	1	D	T2
77	Ammeter	250/5	P2	CROMPTON	243-xxx		D	1	D	P2
78	Contactor	132kW	K2	SPRECHER + SCHUH	CA6-xxx		I	1	D	K2
79	Pump Monitoring Relay		A4	FLYGT MAS 711	40501141		I	1	D	A4
80	Pump Monitoring Indicator		P4	FLYGT MAS 711	40501140		D	1	D	P4
81	Phase Failure Relay	415V	K10F	CARLO GAVAZZI	DP1302CM48		I	1	D	K10F
82							I	1	D	K6T
83							I	1	D	K15F
84	Auto Relay	24VDC	K0	FINDER	60.12		I	1	D	K0
85							I	1	D	T4
86							I	1	D	K23M
87	Relay	240VAC	K19	SPRECHER + SCHUH	CS4 - 40		I	1	D	K19
88	Relay	240VAC	K16A	SPRECHER + SCHUH	CS4 - 22		I	1	D	K16A
89	Relay	240VAC	K8, K11FA, K16FA, K20 K23, K24, K27, K28	SPRECHER + SCHUH	CS4 - 31		I	7	D	K8, K11FA, K16FA, K20 K23, K24, K27, K28
90	Pushbutton	10A	S8	MOELLER	M22 DS 40		D	1	D	S8
91	Pushbutton	10A	S28	MOELLER	M22 DB 30		D	1	D	S28
92	Indicating Light	240VAC	H11, H23	MOELLER	M22 LH R		D	3	D	H11,H15,H23
93	Indicating Light	240VAC	H16	MOELLER	M22 LH Y		D	1	D	H16
94	Selector Switch	20A	S1	KRAUS & NAIMER	CA10		D	1	D A	S1 PUMP CONTROL ON S/DOWN OFF INST S/DOWN PLC
95	Fused Terminals	2A		WEIDMULLER	W SERIES		I		E	E

NOTE

REFER NOTES 1 TO 6 ON DWG 316.1

No.	REVISION DETAILS	DWN	DATE
1	REISSUED FOR TENDER	RK	16.04.21
0	ISSUED FOR CONSTRUCTION	VP	27.10.16

CONSULTANT DETAILS:
GHD
57 Graham Street Nowra NSW 2541
T 61 2 4424 4900 F 61 2 4424 4999
E noamail@ghd.com W www.ghd.com

CONSULTANT REFERENCE No. 23-1426651

Shoalhaven Water
A Group of Shoalhaven City Council

DESIGNED: CP	DATE: 02.2016	COMPANY: GHD	
DRAWN: KT	DATE: 02.2016	COMPANY: GHD	
CHECKED: DB	DATE: 10.2016	COMPANY: GHD	
APPROVED: CS	DATE: 11.2016	COMPANY: GHD	

TITLE:
SHOALHAVEN WATER
LYREBIRD PARK NOWRA SPS2 UPGRADE
ELECTRICAL SERVICES
TYPICAL PUMPING STATION B3
EQUIPMENT SCHEDULE (3 OF 3)

SIZE	SCALE	INDEX No.	DRAWING No.	SHEET	REV No.
A1	N.T.S.		23-24356	316.3	1

Plot Date: 15/04/21 - 20:18 Cad File: C:\CAD\temp\AcPublish_842032\23-24356-316-3.dwg